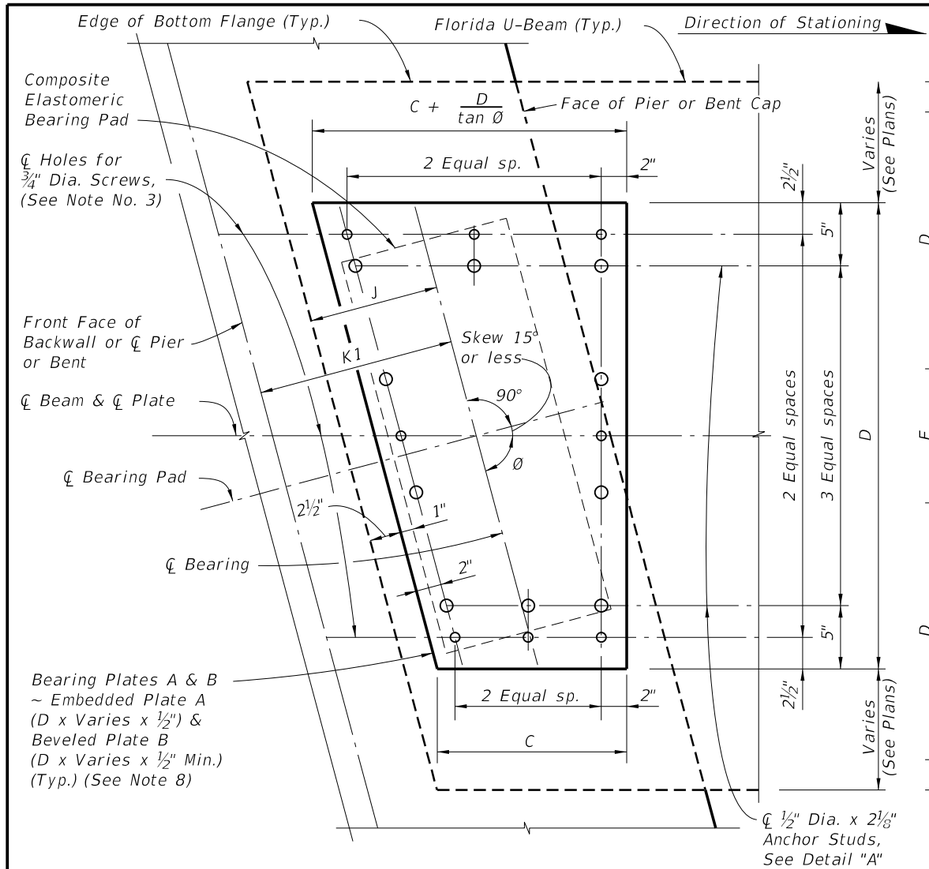

PLAN VIEW OF TYPICAL SINGLE BEARING

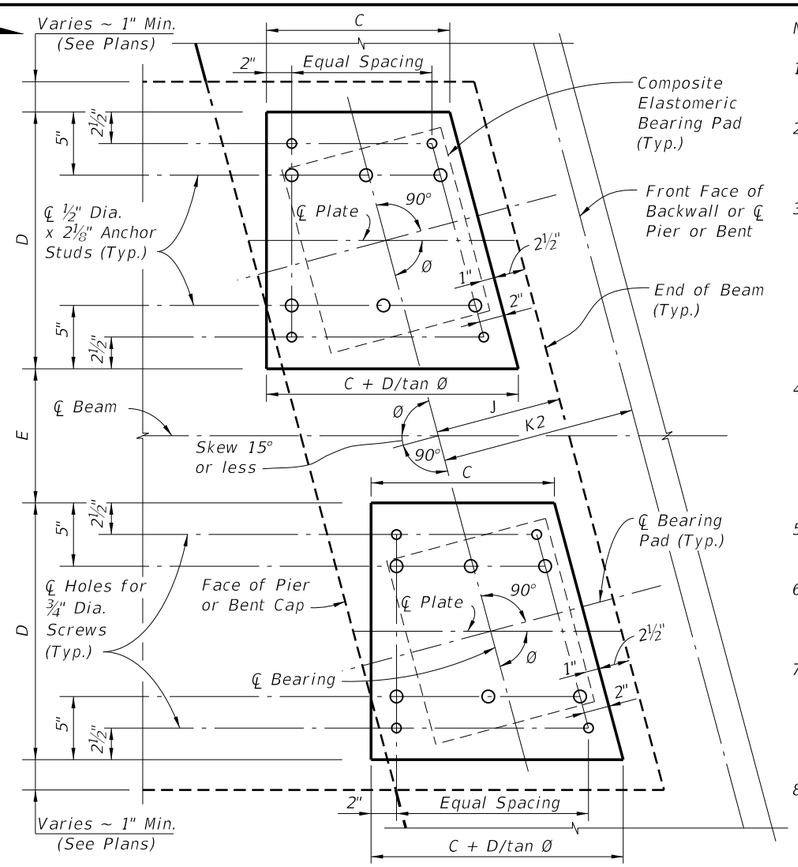

PLAN VIEW OF TYPICAL DOUBLE BEARING

PLAN

(0° < Skew ≤ 15° shown, Skew = 0° Similar)

NOTES:

1. Work this sheet with the 'BEVELED BEARING PLATE DATA TABLE' in the plans.
2. Beveled Bearing Plates B with Embedded Bearing Plates A are required for beams only as scheduled in the 'TABLE OF BEAM VARIABLES' on Beam Sheets.
3. Bearing plate material shall conform to ASTM A36 or ASTM A709 (Grade 36 or 50). Headed Concrete Anchor Studs shall conform to Specification Section 502. Hot-dip galvanized Bearing Plates A & B after fabrication except Galvanized Caps may be welded in place after hot-dip galvanizing. Drill Bearing Plates A and B as an assembled unit, thread Bearing Plate A only. Drill and thread holes perpendicular to bottom of Plate B and prior to plates being galvanized (ASTM A 123).
4. Provide Electroplated, Flat Countersunk Head Cap Screws in accordance with ASTM F 835. Electroplating shall be ASTM B 633, SC 2, Type 1. Provide screws long enough to maintain a ¾" minimum embedment into Embedded Bearing Plate A and Galvanized Cap. Provide steel Galvanized Caps with ½" Min. to 1½" Max. height and nominal 1" inside diameter.
5. Include the cost of Beveled Bearing Plates in the pay item for Prestressed Beams (Florida U-Beams).
6. For Dimensions C and D, see 'BEVELED BEARING PLATE DATA TABLE' in the Structures Plans. For Dimensions J, K1 and K2, see 'TABLE OF BEAM VARIABLES' on Beam Sheets.
7. All details and dimensions shown are along ℄ Beam for single bearings or ℄ Plate parallel to ℄ Beam for double bearings, except for dimensions to ¾" Dia. Screws and ½" Dia. x 2⅛" Anchor Studs, which are along ℄ Screws or ℄ Anchor Studs. Positive Slope shown, Negative Slope similar.
8. When Skew = 0°, dimensions for Embedded Bearing Plate A are D x C x ½" and for Beveled Plate B are D x C x ½" Min.

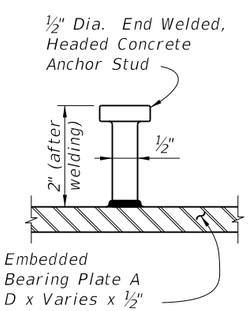

DETAIL "A"

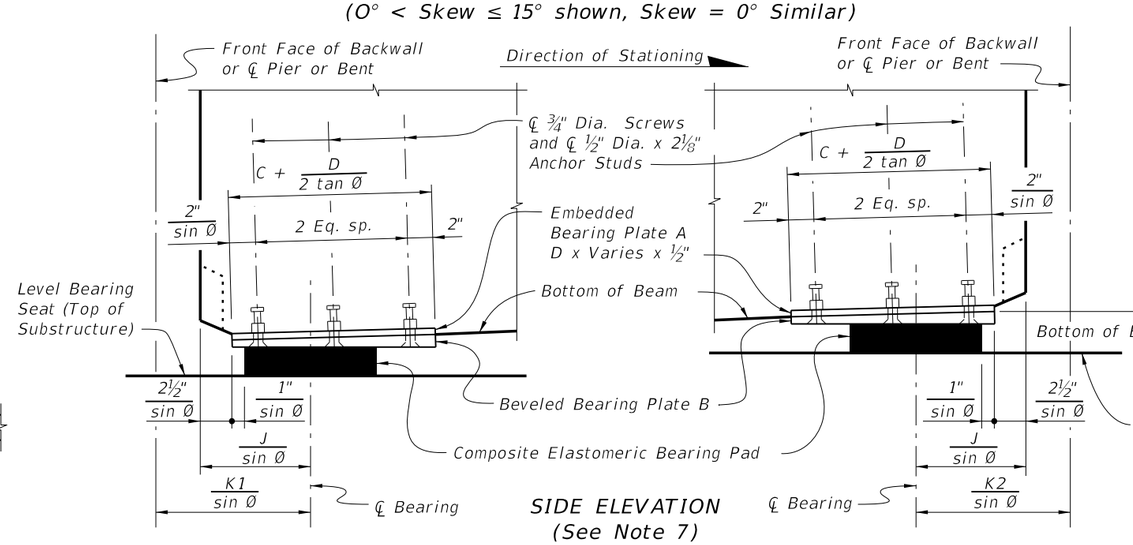

SIDE ELEVATION

(See Note 7)

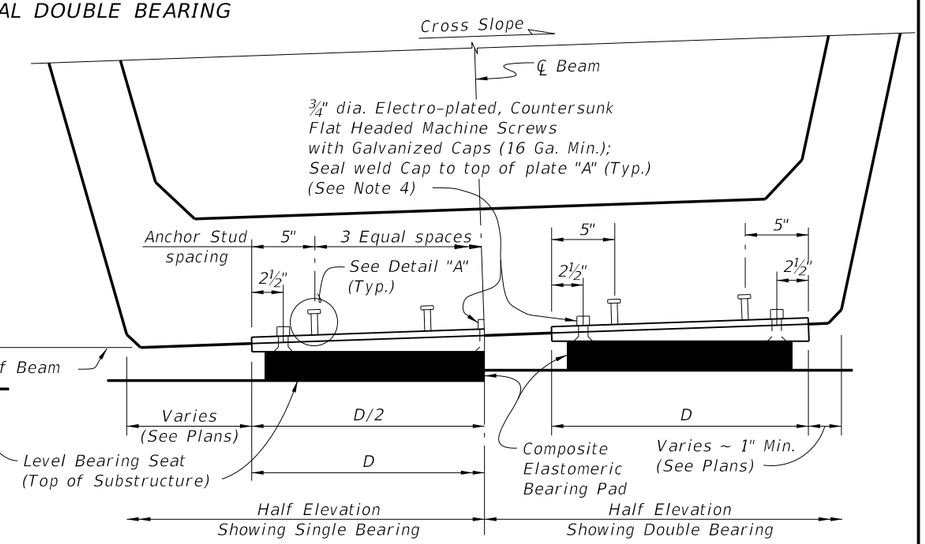

END ELEVATION

(Positive Cross Slope shown, Negative Cross Slope similar)

LAST REVISION	REVISION	DESCRIPTION:			INDEX NO.	SHEET NO.
01/01/10			FDOT 2015 DESIGN STANDARDS	BEVELED BEARING PLATE DETAILS - PRESTRESSED FLORIDA-U BEAMS	20502	1 of 1

5/22/2014 1:32:17 PM