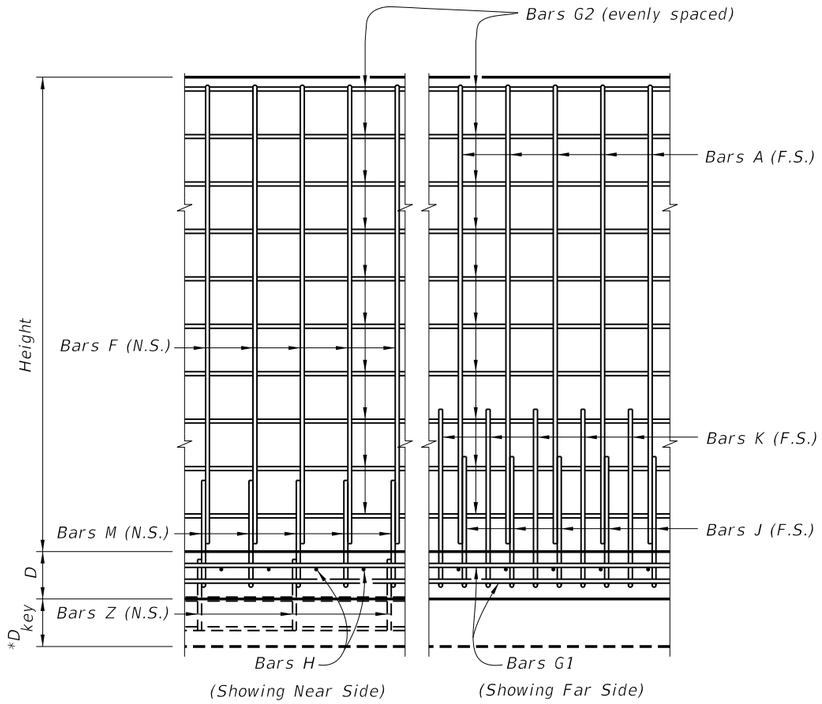

VIEW A-A

(Shear key shown dashed)

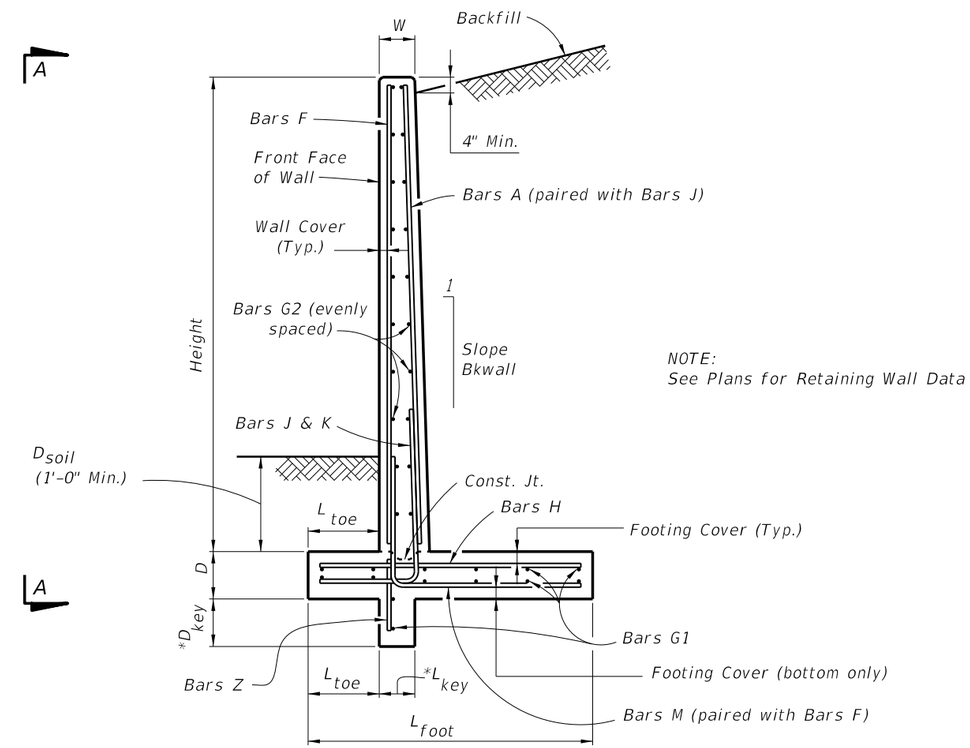

* Shear Key is required only when specified in the Plans.

TYPICAL SECTION

NOTES

DESIGN SPECIFICATIONS:
Design according to FDOT Structures Manual (current edition).

TRAFFIC RAILINGS OR PARAPETS:
If there is a Traffic Railing or Parapet on the wall, align Wall Joints with V-Grooves, and Wall Expansion Joints with Barrier Open Joints.

FOUNDATION: Prepare the soil below the footing in accordance with the requirements for spread footings in Specification Section 455.

PAYMENT:
All Retaining Wall costs, including all miscellaneous costs, shall be paid for at the unit contract price for either Class II, III or IV Concrete (Retaining Walls) (CY) and Reinforcing Steel (Retaining Walls) (lbs.).
Retaining Wall quantities shall not include concrete nor reinforcing steel for Traffic Railing, Parapet or Junction Slab.

REINFORCING STEEL BENDING DIAGRAMS

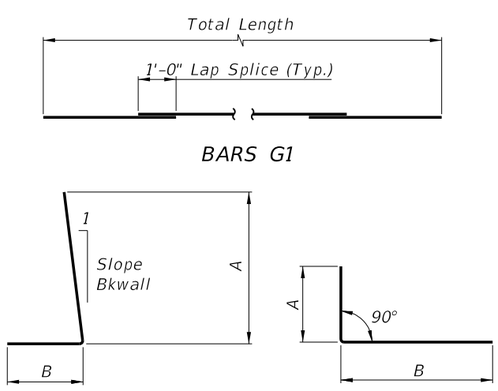

NOTE:
All bar dimensions are out-to-out

**Wall joint spacing 25 ft. maximum and 5' minimum. At minimum, every fourth wall joint to be an expansion joint. See Plans for actual wall joint spacing and expansion joint location.

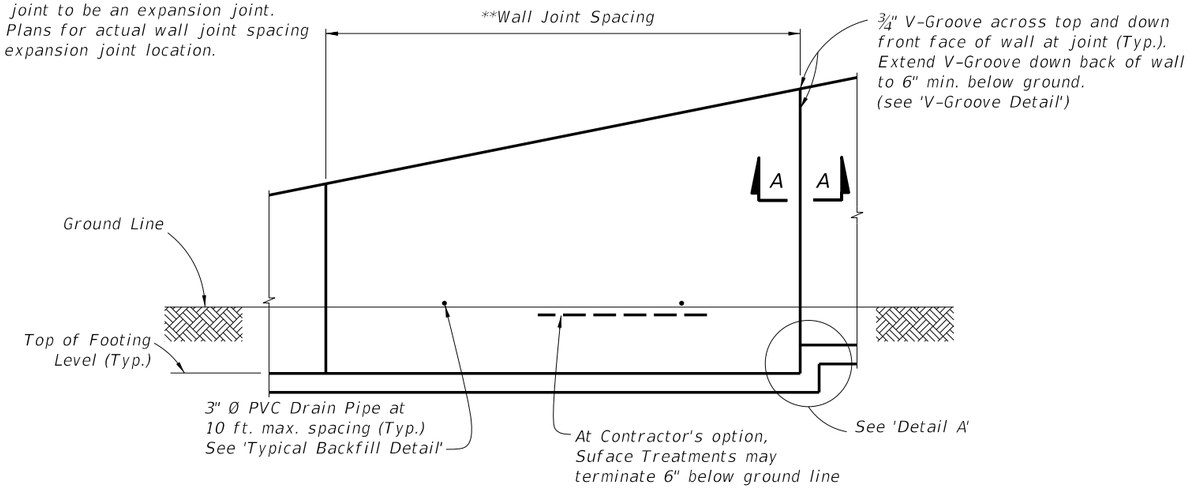

FRONT ELEVATION

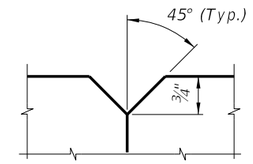

V-GROOVE DETAIL

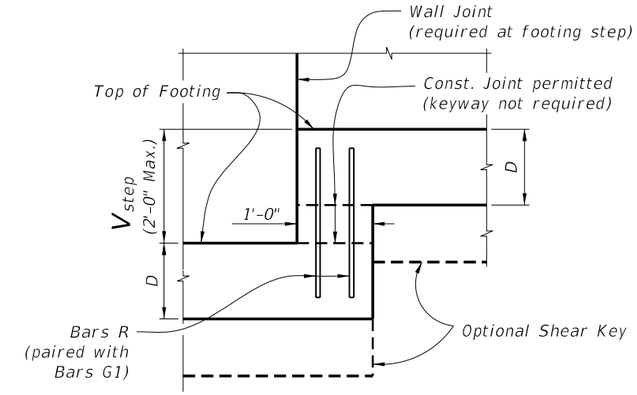

DETAIL A

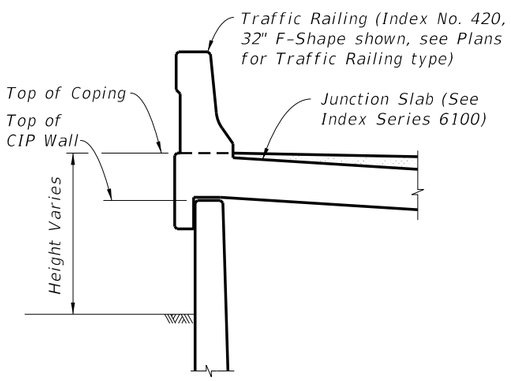

TRAFFIC RAILING/JUNCTION SLAB DETAIL
(32" F-Shape Shown, other Traffic Railings similar)
(for 32" F-Shape Traffic Railing (as shown), see Index No. 420;
for 32" Vertical Shape Traffic Railing, see Index No. 423;
for 42" Vertical Shape Traffic Railing, see Index No. 422)

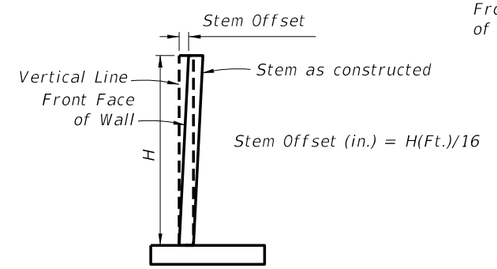

STEM OFFSET VALUES
(for H < 20 Ft.)

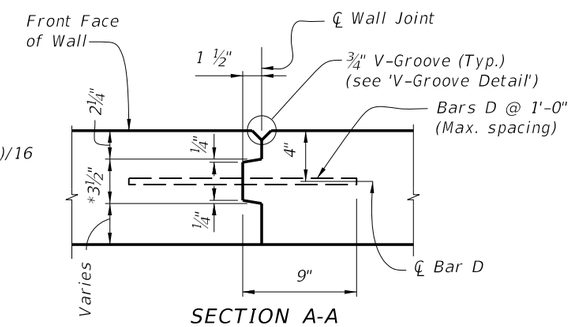

SECTION A-A
WALL JOINT DETAIL

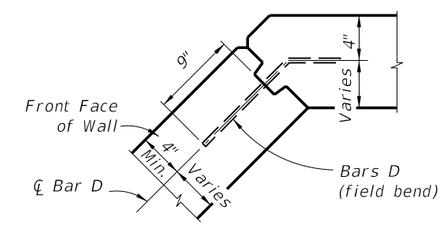

TYPICAL CORNER JOINT DETAIL

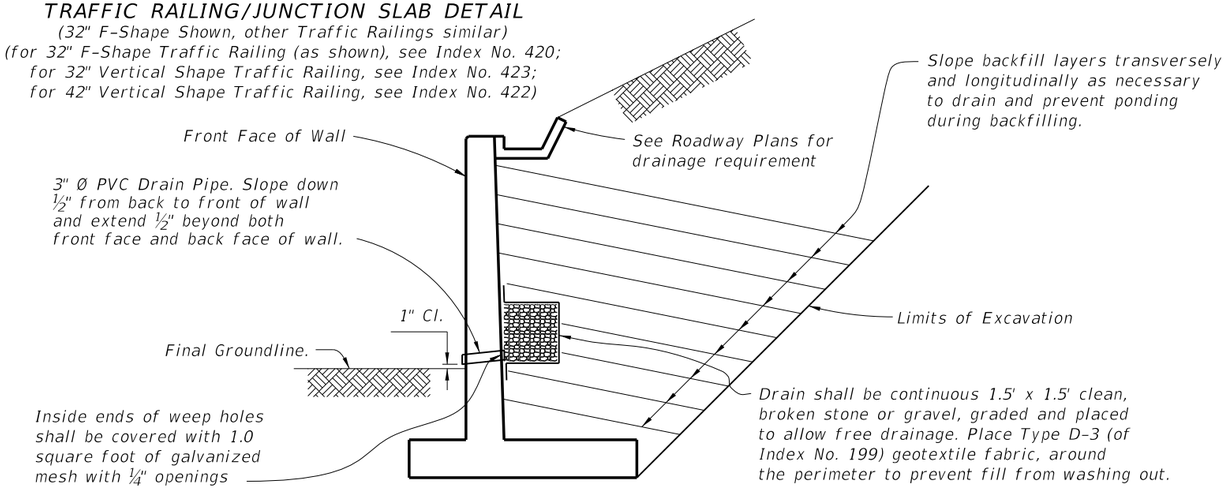

TYPICAL BACKFILL DETAIL

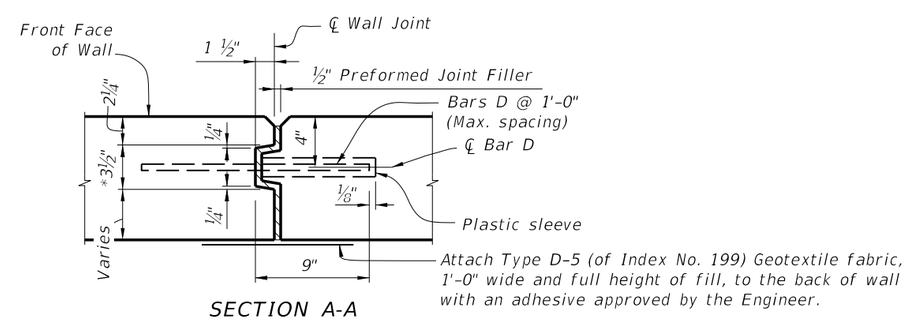

SECTION A-A
EXPANSION JOINT DETAIL

* Key to stop at top of footing and 6" from top of wall. Joint across footing and top of wall to be a straight line.

LAST REVISION	REVISION	DESCRIPTION:			INDEX NO.	SHEET NO.
01/01/11			FDOT 2014 DESIGN STANDARDS	C-I-P CANTILEVER RETAINING WALL	6010	2 of 2

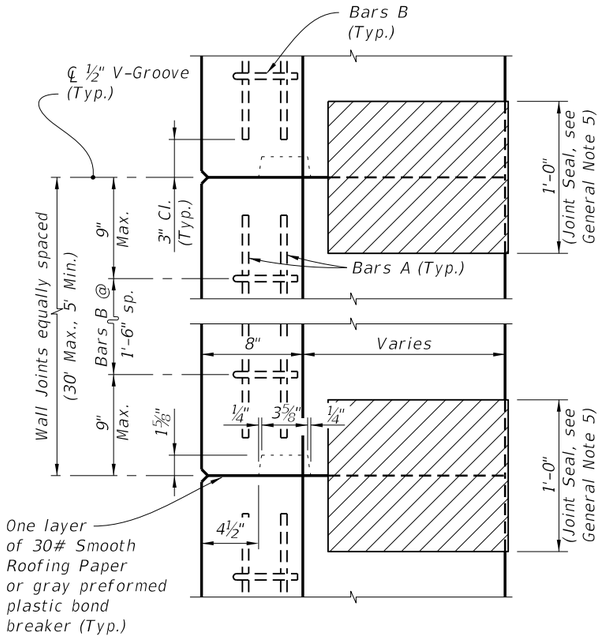

KEYWAY & WALL JOINT DETAIL
(TOP VIEW)

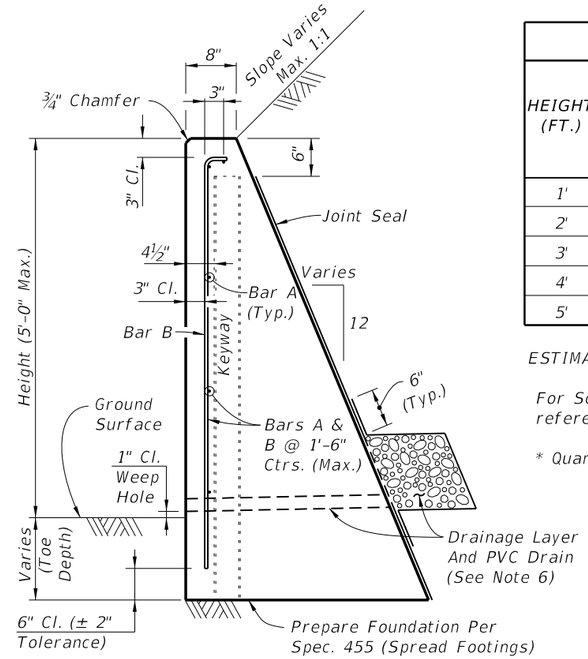

TYPICAL SECTION

ESTIMATED QUANTITIES FOR WALL

HEIGHT (FT.)	PER LINEAR FOOT OF WALL				WEEP HOLES & DRAIN REQD.
	CLASS NS CONCRETE (CY)			REINF. STEEL (LB.)	
	SCHEME 1	SCHEME 2	SCHEME 3		
1'	0.08	0.11 (0.20*)	0.03	3 (4*)	No
2'	0.14	0.20 (0.32*)	0.09	4 (5*)	No
3'	0.22	0.32 (0.47*)	0.29	5 (6*)	Yes
4'	0.32	0.47 (0.65*)	0.43	6 (7*)	Yes
5'	0.43	0.65 (0.85*)	0.60	7 (8*)	Yes

ESTIMATED QUANTITIES NOTES:

For Scheme 3 Junction Slab and Traffic Railing see the referenced Design Standards for estimated quantities.

* Quantity for 2'-0" Toe Depth in Scheme 2.

GENERAL NOTES

1. Gravity walls constructed as extensions of reinforced concrete retaining walls, except walls of proprietary designs, shall have the same face texture and finish as the reinforced concrete retaining wall.
2. Concrete for Gravity Wall shall be Class NS per Section 347. Concrete for Scheme 3 Junction Slab and Traffic Railing shall be Class II per Section 346, unless otherwise specified in the plans.
3. Reinforcing steel shall meet the requirements of Specification Section 931 (Grade 40 or 60) and be provided at the max. spacings shown. Smooth or Deformed Welded Wire Reinforcement (WWR) may be substituted on an equal area basis. Do not increas bar/wire spacing for Grade 60 reinforcing steel or WWR.
4. When required, for adjunct guiderail see the plans, Index No. 870 or 880 as appropriate. For adjunct Type B fence see Index No. 802.
5. Joint seal to be two layers of 30# smooth roofing paper or Type D-5 geotextile fabric in accordance with Index No. 199. Mop all contact surfaces of concrete and roofing paper or geotextile fabric with cut-back asphalt. Stop roofing paper or geotextile fabric 6" below top of wall).
6. Provide a continuous 1'x1' clean gravel or crushed rock drain for wall heights 3 ft. and higher. Wrap drainage layer as shown, with Type D-3 geotextile fabric in accordance with Index No. 199. Provide 8"x8" galvanized mesh with ¼" openings, at the inside end of the PVC Drain Pipe. Provide 2" Ø PVC Drain Pipe (Sch. 40) at 10 ft. max. spacing (When Drainage Layer required). Locate minimum 2'-0" clear of wall joints.
7. Cost of reinforcing steel, face texture, finish, joint seal, drain pipes, drainage layer, galvanized mesh and geotextile fabric to be included in the Contract Unit Price for Concrete Class NS, Gravity Wall. Cost of concrete for Junction Slab in Scheme 3, to be included in Contract Unit Price for Concrete Traffic Railing Barrier With Junction Slab. Adjunct railings or fences to be paid for separately.

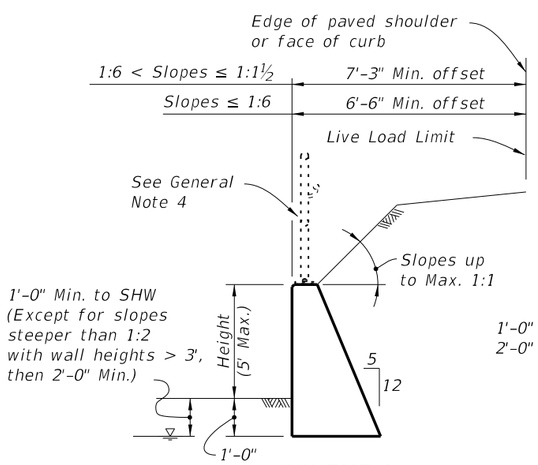

SCHEME 1
(No Traffic Loading Effects)

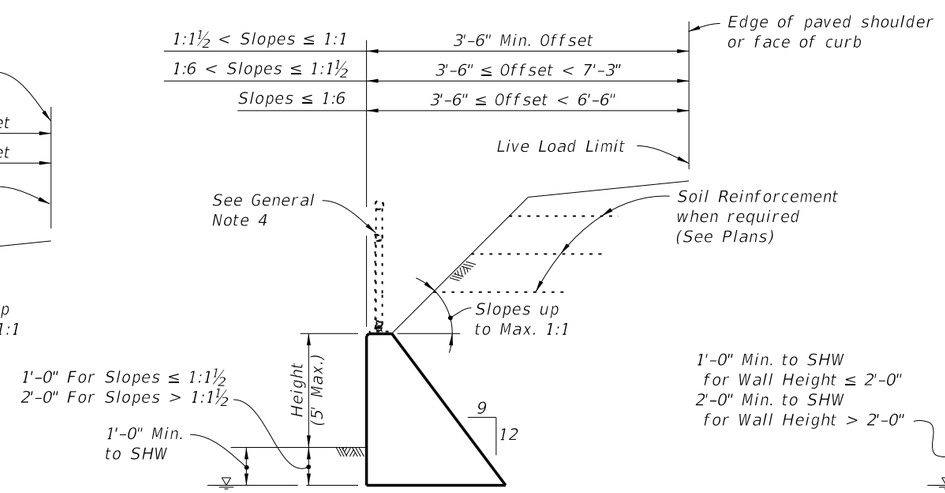

SCHEME 2
(With Traffic Loading or Slopes > 1:1½)

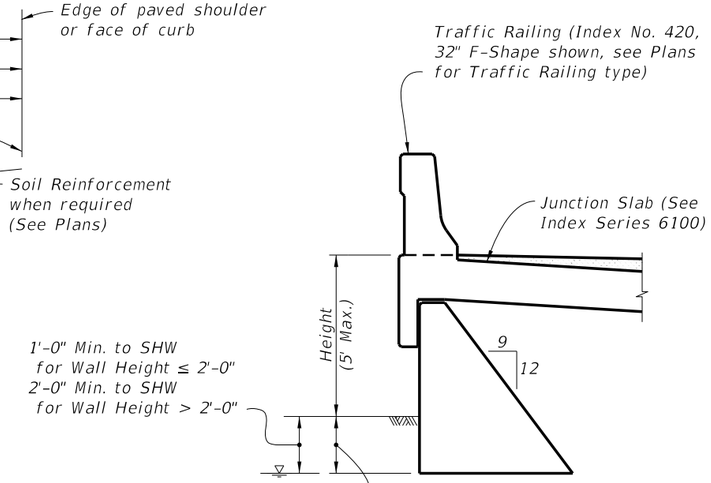

SCHEME 3
(With Traffic Railing)

BILL OF REINFORCING STEEL

MARK	SIZE	LENGTH
A	4	As Reqd.
B	4	As Reqd.

BAR BENDING DIAGRAM

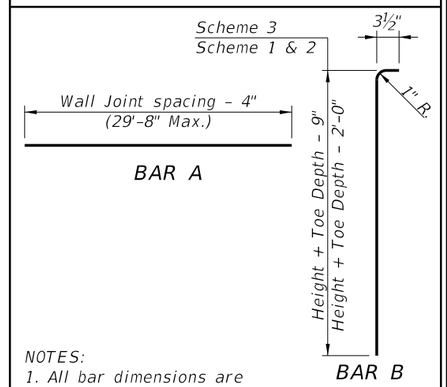

NOTES:
1. All bar dimensions are out to out.
2. Lap splices for Bars A must be a minimum of 1'-6".

LAST REVISION	REVISION	DESCRIPTION:			INDEX NO.	SHEET NO.
07/01/13			FDOT 2014 DESIGN STANDARDS	C-I-P GRAVITY WALL	6011	1 of 1

NOTES

SPECIFICATIONS:

1. General Specifications:
   The Florida Department of Transportation "Standard Specifications for Road and Bridge Construction", Current Edition and Supplements as Amended.
2. Design Specifications:
   a. Florida Department of Transportation (FDOT) "Structures Design Guidelines", Current Edition.
   b. American Association of State Highway and Transportation Officials (AASHTO) "LRFD Bridge Design Specifications", Current Edition.
   c. AASHTO-AGC-ARTBA Task Force 27 (Ground Modification Techniques), "Insitu Soil Improvement Techniques", January 1990.

DESIGN CRITERIA:

1. Design is based on the assumption that the material contained within the reinforced soil volume, methods of construction and quality of prefabricated materials are in accordance with Specification Section 548 and Chapter 3 of the FDOT Structures Design Guidelines.
2. It is the responsibility of the Engineer of Record to determine that the maximum factored bearing pressure shown for the wall does not exceed the factored bearing resistance of the foundation for that specific wall location.
3. The Wall Company is responsible for internal stability of the wall. External stability design, including foundation and slope stability, is the responsibility of the Engineer of Record.
4. If there are manholes and/ or drop inlets present, design and analysis for both internal and external stability shall be considered.

SOIL PARAMETERS:

1. See Wall Control Drawings for soil characteristics of foundation material to be used in the design of the wall system.
2. The Contractor will provide soil design parameters for backfill material based on the actual soil characteristics utilized at the site.

MATERIALS:

1. Concrete Class: See Wall Control Drawings.
2. See Specification Section 548 for material requirements.
3. For additional material requirements see the Wall Company's General Notes.

CONSTRUCTION:

1. Walls will be constructed in accordance with Specification Section 548 and the Wall Company's instructions.
2. For location and alignment of retaining walls, see Wall Control Drawings.
3. If present, consider in design and analysis and locate manholes and drop inlets as shown on wall elevations.
4. Refer to Wall Control Drawings of individual walls for minimum reinforcement strip/mesh length, factored bearing resistance's, minimum wall embedment and anticipated long term and differential settlements.
5. The Contractor is responsible for controlling water during storm events as needed during construction.
6. It is the Contractor's responsibility to determine the location of any guardrail posts behind retaining wall panels. Prior to placement of the top layer of soil reinforcement, individual reinforcing strips/mesh may be skewed (15° maximum) to avoid the post locations if authorized by the Engineer. No cutting of soil reinforcement is allowed unless shown on Shop Drawings and approved by the Engineer. Any damage done to the soil reinforcement due to installation of the guardrail will be repaired by the Contractor at the Contractor's expense. Repair method will be approved by the Engineer.
7. If existing or future structures, pipes, foundations or guardrail posts within the reinforced soil volume interfere with the normal placement of soil reinforcement and specific directions have not been provided on the plans, the Contractor will notify the Engineer to determine what course of action shall be taken.
8. The Contractor is responsible for gradually displacing upper layer(s) of soil reinforcement downward (15° maximum from horizontal) to avoid cutting soil reinforcement and conflicts with paving and subgrade preparation. The Contractor's attention is directed especially to situations where roadway superelevation and/or soil mixing are anticipated.
9. For concrete facing panel surface treatment, see Wall Control Drawings. Extend surface treatment a minimum of 6" below final ground line.
10. Drive piles located within the soil volume prior to construction of the retaining wall, unless a method to protect the structure, acceptable to both the Engineer and Wall Company, is proposed and approved in writing. The portion of piles or drilled shafts extensions within the soil volume will be wrapped with polyethylene sheeting in accordance with Specification Section 459.
11. A structural extension of the connection of the retaining wall panel to soil reinforcement will be used whenever necessary to avoid cutting or excessive skewing (greater than 15°) of the soil reinforcement around obstructions (i.e., piles, pipes, manholes, drop inlets, etc.).
12. Steps in leveling pads will occur at MSE Wall panel interfaces. Panels will not cantilever more than 2" past the end of the upper tier leveling pad.
13. The top of the leveling pad or footing will be 2'-0" minimum below final ground line.
14. Top of leveling pad elevations shown in the Wall Control Drawings are maximum elevations. The constructed leveling pad elevations may be deeper based on the panel layout shown in the shop drawings.
15. The height of panels in the bottom course of MSE Walls must not be less than half the height of a standard panel.
16. Work this Index with Index 6100 & 6200 Series.

SHOP DRAWING REQUIREMENTS:
See Specification Section 548 for shop drawing requirements.

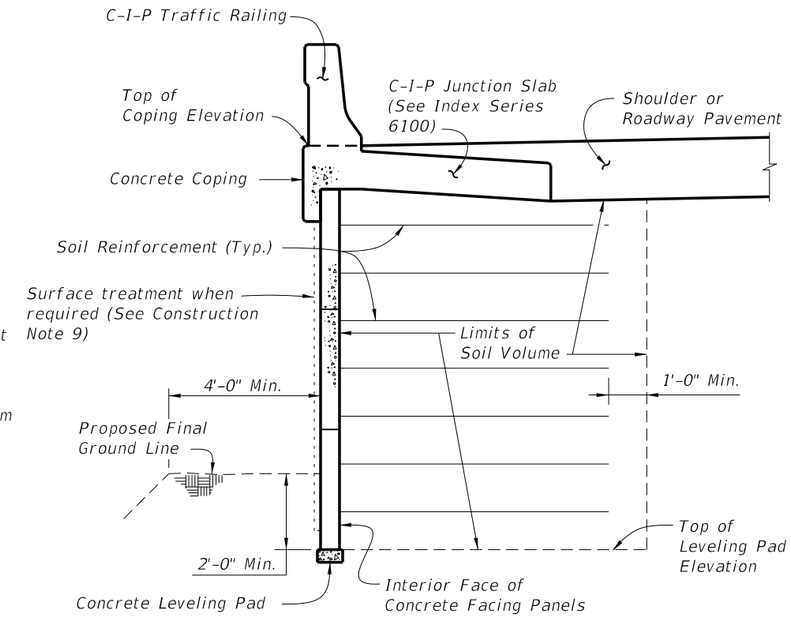

TYPICAL MSE RETAINING WALL SECTION
WITH A TRAFFIC RAILING
(Showing Limits of the Reinforced Soil Volume)

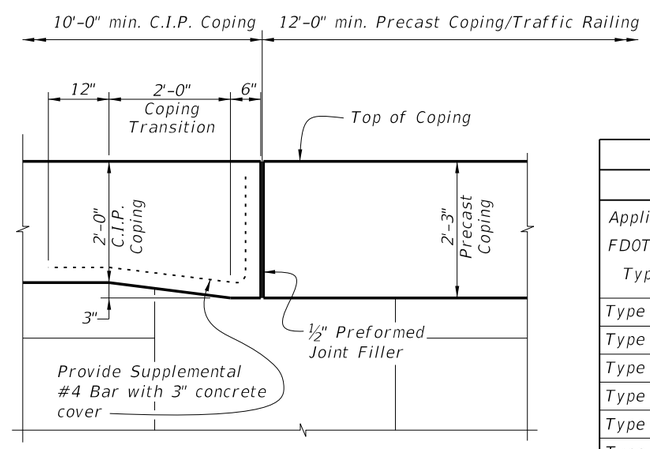

ELEVATION VIEW OF
COPING HEIGHT TRANSITION
(Railing Not Shown For Clarity)

FDOT MSE RETAINING WALL CLASSIFICATION TABLE										
Durability Requirements					Other Allowable FDOT Wall Types					
Applicable FDOT Wall Type *	Concrete Cover (in.)	Concrete Class for Panels	Pozzolan Additions? **	Soil Reinforcement Type	2A	2B	2C	2D	2E	2F
Type 2A	2	II	No	Metal		✔	✔	✔	✔	✔
Type 2B	2	IV	No	Metal			✔	✔	✔	✔
Type 2C	3	IV	No	Metal				✔	✔	✔
Type 2D	3	IV	Yes	Metal					✔	✔
Type 2E	3	IV	No	Plastic						✔
Type 2F	3	IV	Yes	Plastic						

* See Data Table in Contract Plans.

** Silica fume, metakaolin or ultrafine fly ash.

GENERAL NOTES AND DETAILS

LAST REVISION	REVISION	DESCRIPTION:	FDOT 2014 DESIGN STANDARDS	PERMANENT MSE RETAINING WALL SYSTEMS	INDEX NO.	SHEET NO.
07/01/13					6020	1 of 1

NOTES

SPECIFICATIONS:

1. General Specifications:
   The Florida Department of Transportation "Standard Specifications for Road and Bridge Construction", Current Edition and Supplements as Amended.
2. Design Specifications:
   a. Florida Department of Transportation (FDOT) "Structures Design Guidelines", Current Edition.
   b. American Association of State Highway and Transportation Officials (AASHTO) "LRFD Bridge Design Specifications", Current Edition.
   c. AASHTO-AGC-ARTBA Task Force 27 (Ground Modification Techniques), "Insitu Soil Improvement Techniques", January 1990.

DESIGN CRITERIA:

1. Design is based on the assumption that the material contained within the reinforced soil volume, methods of construction and quality of prefabricated materials are in accordance with Specification Section 548 and FDOT Structures Design Guidelines Section 3.13.2.
2. It is the responsibility of the Engineer to determine that the factored bearing pressure shown for the wall does not exceed the factored bearing resistance of the foundation for that specific wall location.
3. The Wall Company is responsible for internal stability of the wall. External stability design, including foundation and slope stability, is the responsibility of the Engineer.
4. If present, consider in design and analysis and locate manholes and drop inlets as shown on wall elevations.

SOIL PARAMETERS:

1. See wall control drawings for soil characteristics of foundation material to be used in the design of the wall system. The Contractor must provide soil design parameters for backfill material based on the actual soil characteristics utilized at the site. Provide the values of unit weight, cohesion and internal friction angle in the Shop Drawings.

MATERIALS:

1. Provide soil reinforcement in accordance with Specification Section 548.
2. For additional material notes, see Wall Company General Notes.

CONSTRUCTION:

1. Walls must be constructed in accordance with Specification Section 548 and the Wall Company's instructions.
2. For location and alignment of retaining walls, see Wall Control Drawings.
3. Refer to Plan and Elevation sheets of individual walls for minimum reinforcement strip/mesh length, factored bearing resistance's, minimum wall embedment and anticipated long term and differential settlements.
4. If existing or future structures, pipes, foundations or guardrail posts within the reinforced soil volume interfere with the normal placement of soil reinforcement and specific directions have not been provided on the plans, the Contractor must notify the Engineer to determine what course of action should be taken.
5. The Contractor is responsible for gradually deflecting upper layer(s) of soil reinforcement downward (15° maximum from horizontal) to avoid cutting soil reinforcement and conflicts with paving and subgrade preparation. The Contractor's attention is directed especially to situations where roadway superelevation and/or soil mixing are anticipated.

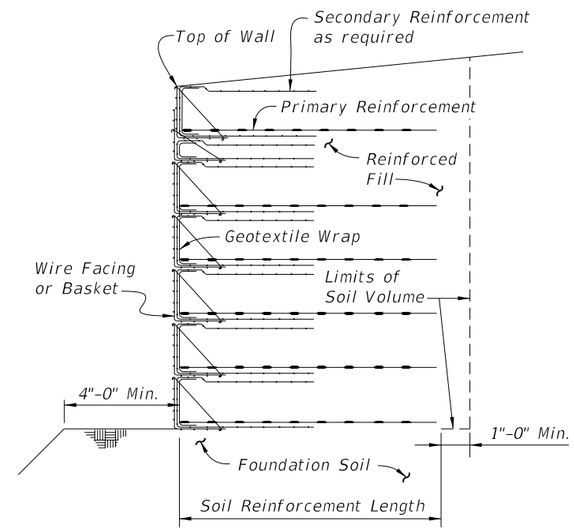

TYPICAL RETAINING WALL SECTION
(Showing Limits of the Reinforced Soil Volume)

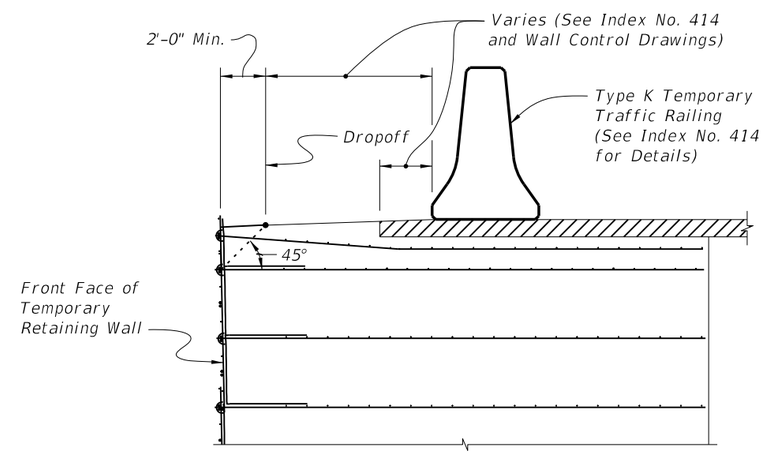

TEMPORARY TRAFFIC RAILING
PLACEMENT DETAIL

GENERAL NOTES AND DETAILS

CROSS REFERENCES:
For Dimensions L and X see Sheet
Pile Wall Data Table in Structures Plans.

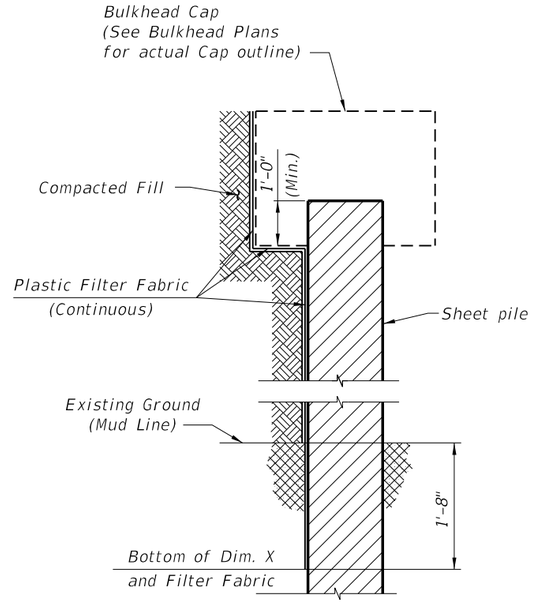

SECTION THRU BULKHEAD

(Showing Plastic Filter Fabric)

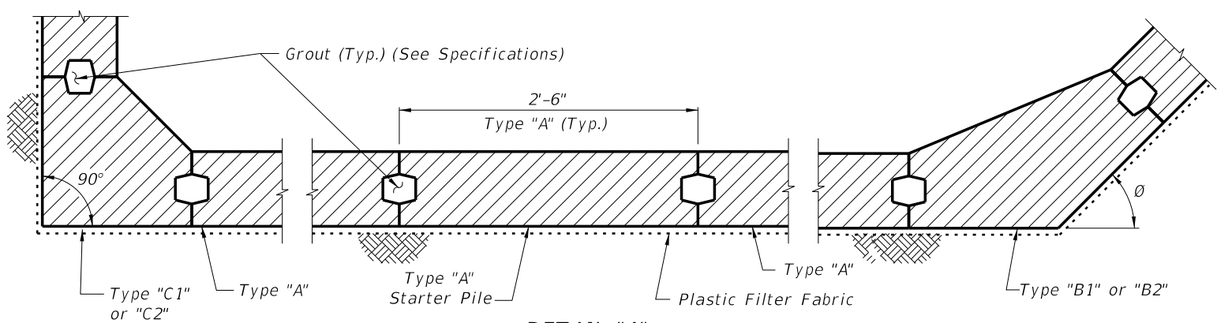

DETAIL "A"

(Cap and Anchoring System Not Shown)
(Section Taken Above Dimension X)

NOTE: Detail "A" shows a Part-Plan View of an assumed bulkhead.
See Bulkhead plans for actual Plan View.

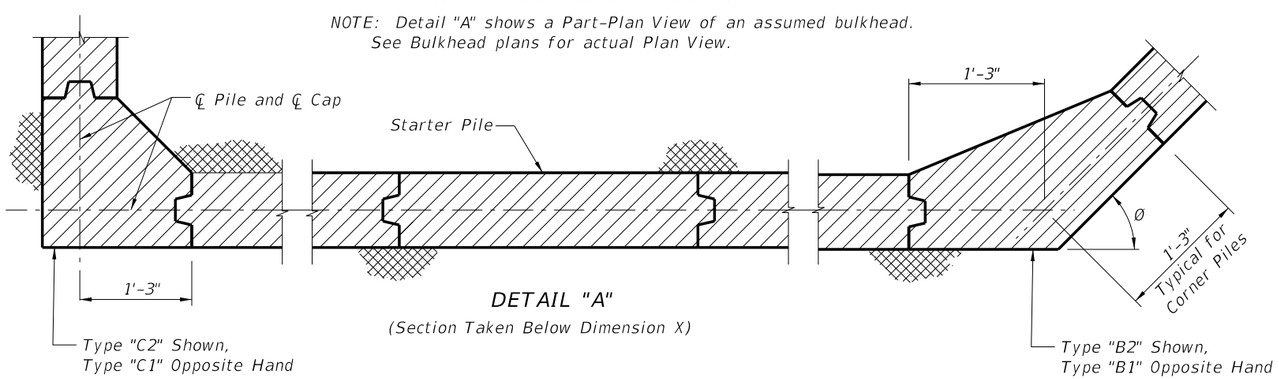

DETAIL "A"

(Section Taken Below Dimension X)

SHEET PILE DESIGN CRITERIA AND NOTES

DESCRIPTION:
This Design Standard includes details for five types of piles with two thicknesses.
Types "B1", "B2", "C1" and "C2" piles (corner piles) are of reinforced concrete construction, and Type "A" is of prestressed concrete construction. The piles shall be manufactured, cured and installed in accordance with the requirements of the contract documents.

MATERIALS: (for materials not listed refer to the Specifications)
CONCRETE

Class:	V (Special) for slightly and moderately aggressive environments
	V (Special w/ Silica Fume) for extremely aggressive environment
Unit weight:	150 pcf
Modulus of Elasticity:	Based on the use of Florida limerock concrete

REINFORCING STEEL
ASTM A615 Grade 60

PRESTRESSING STEEL
ASTM A416 Grade 270 (Low-Relaxation Strand)

DESIGN PARAMETERS:
Type "A"

Concrete Compressive Strength at release of prestressing:	4000 psi minimum
Uniform compression after prestressing losses:	1000 psi minimum
Pick-up, Storage and Transportation:	0.0 psi tension with 1.5 times pile self weight

Types "B1", "B2", "C1" & "C2"
Pick-up, Storage and Transportation: Minimum compressive strength f'ci ≥ 4000 psi required.

ENVIRONMENT:
The pile designs are applicable to all Environments.

PLASTIC FILTER FABRIC:
The plastic filter fabric shall extend to the bottom of the "X" dimension.

PILE PICK-UP AND HANDLING:
Type "A"
Pick-up of pile may be either a single point pick-up or a two point pick-up as shown below.
Types "B1", "B2", "C1" & "C2"
Two point pick-up for lifting out of forms & two point support for storage & transportation.
Single point pick-up for installation only.

PILE FIT-UP:
The 2'-6" Sheet Pile dimension is nominal. This dimension may be shortened by the Manufacturer up to ½" to allow for Sheet Pile fit-up in its final position. Minimum Sheet Pile width is 2'-5½". No changes shall be made to the tongues or grooves.

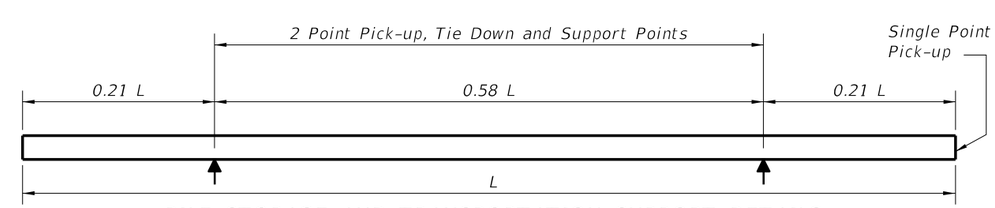

PILE STORAGE AND TRANSPORTATION SUPPORT DETAILS

NOTES AND DETAILS

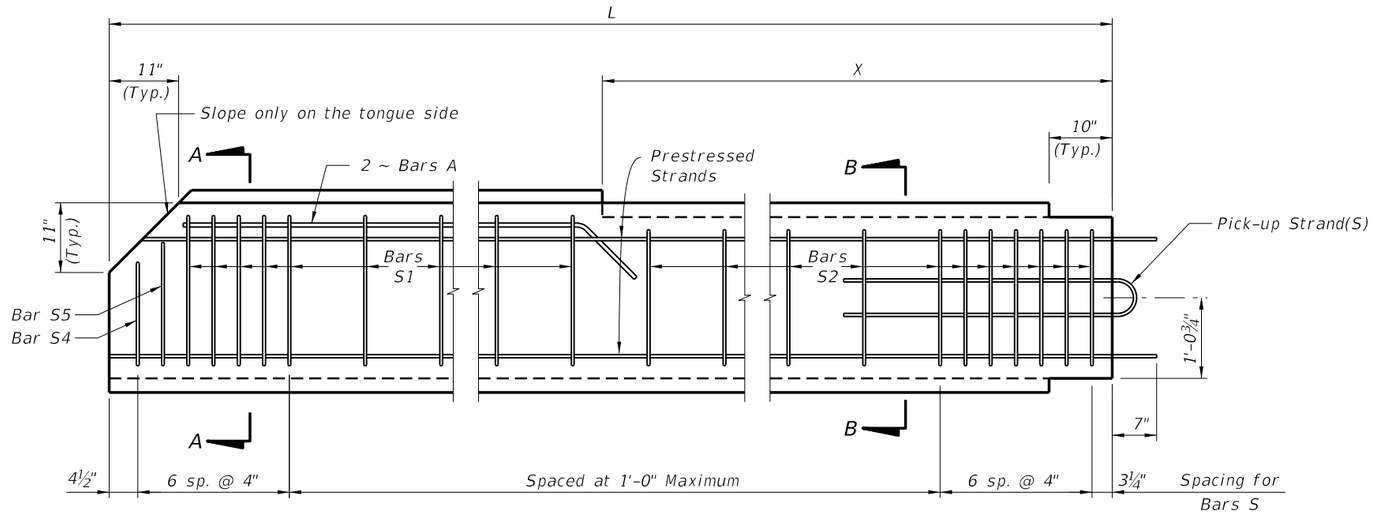

TYPICAL PILE

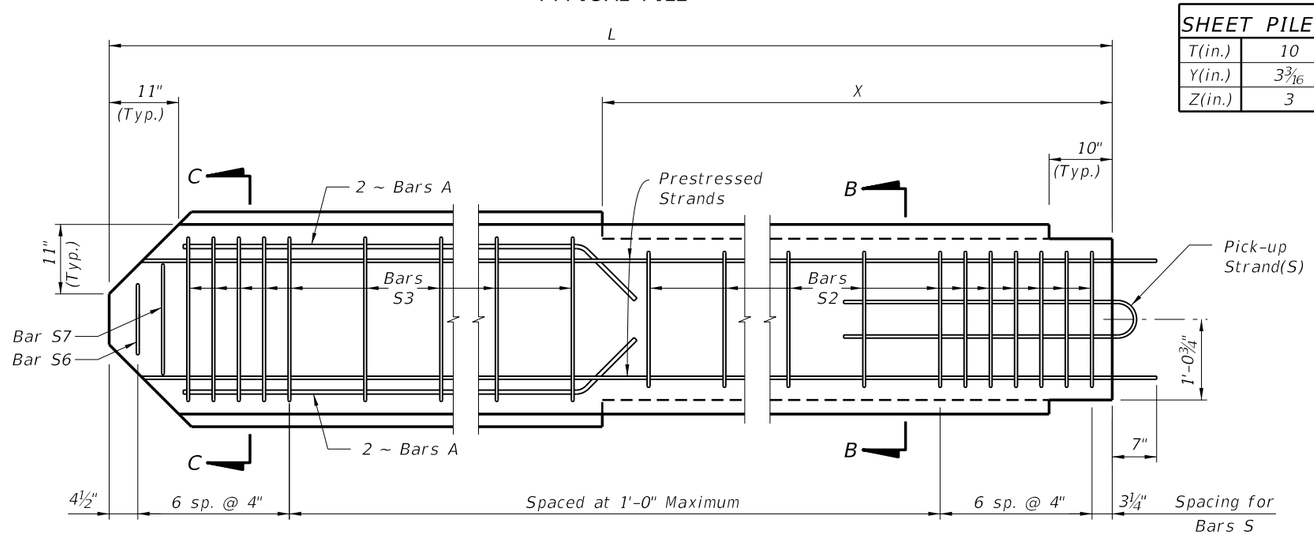

STARTER PILE

SHEET PILE DIMENSIONS		
T(in.)	10	12
Y(in.)	3 3/16	4 3/16
Z(in.)	3	4

Wall Thickness	STRAND DIA. (in.)	MAXIMUM L	n	D (in.)	TOTAL # OF STRANDS	SECTION MODULUS (in.³)	* STRESS (psi)
T=10 in.	0.5	28'-0"	6	3¼	14	500	1150
	0.6	27'-0"	4	5	10	500	1160
T=12 in.	0.5	31'-0"	7	2⅞	16	720	1100
	0.6	30'-0"	5	4	12	720	1160

* Unit Prestress after losses.

BAR BENDING DIAGRAMS

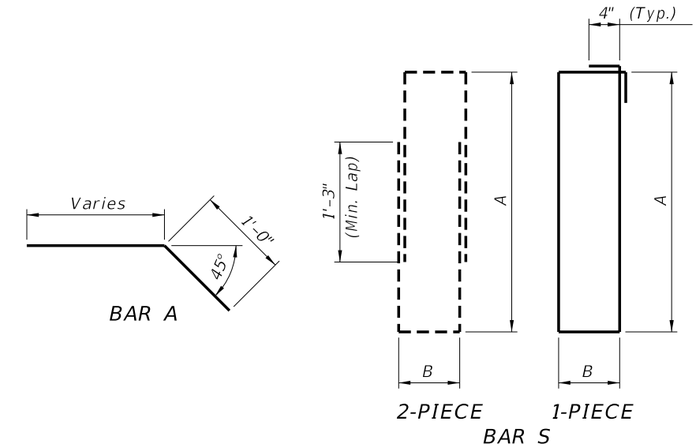

DIMENSION A	
S1	1'-11¾"
S2	1'-9½"
S3	2'-2"
S4	1'-6¾"
S5	1'-10¾"
S6	11"
S7	1'-7¼"

DIMENSION B	
T=10 in.	4"
T=12 in.	6"

NOTES:
1. Intermediate Prestress Strands not shown in Elevations and Sections.
2. All bar dimensions are out-to-out.
3. Bars A are #5 and Bars S are #4.
4. At the Contractor's option Bars S may be fabricated as a two piece bar as shown in the Bar Bending Diagram.
5. The Contractor may use Deformed Welded Wire Reinforcement meeting the requirements of Specification Section 931 in lieu of Bars A and Bars S if the wire size and spacing provide the same area of reinforcing steel per foot as the Bars shown.
6. For Dimensions L and X see Sheet Pile Data Table in Structures Plans.

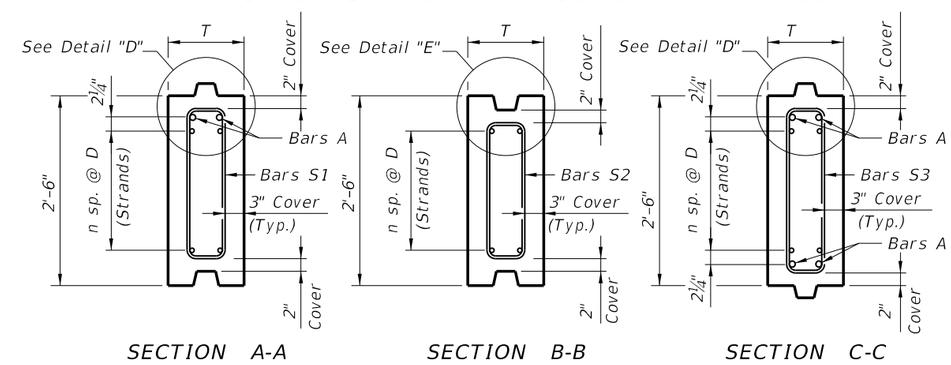

SECTION A-A SECTION B-B SECTION C-C

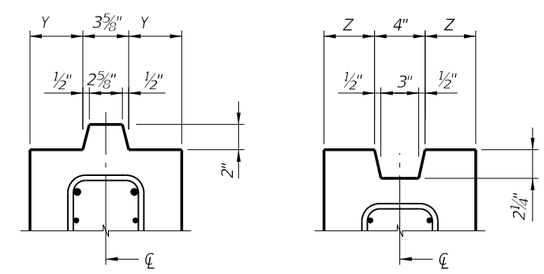

DETAIL "D" (Typical Tongue)

DETAIL "E" (Typical Groove)

TYPE "A" STANDARD SECTION

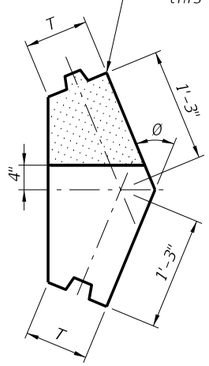

VIEW C-C

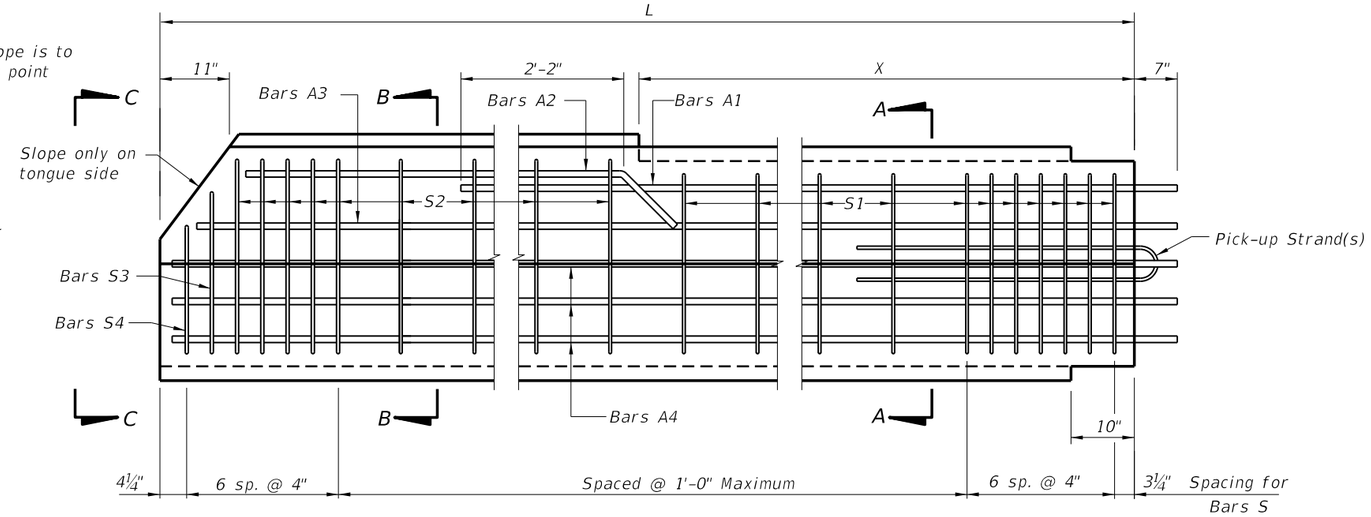

ELEVATION
(TYPE "B1" PILE SHOWN, TYPE "B2" PILE OPPOSITE HAND)

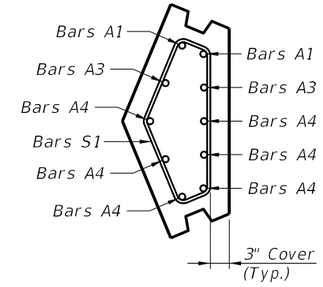

SECTION A-A

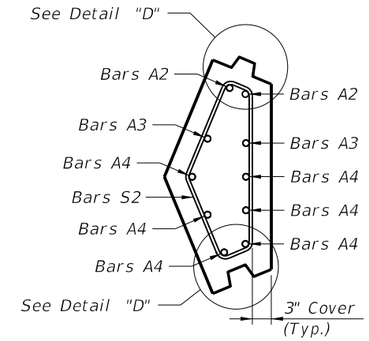

SECTION B-B

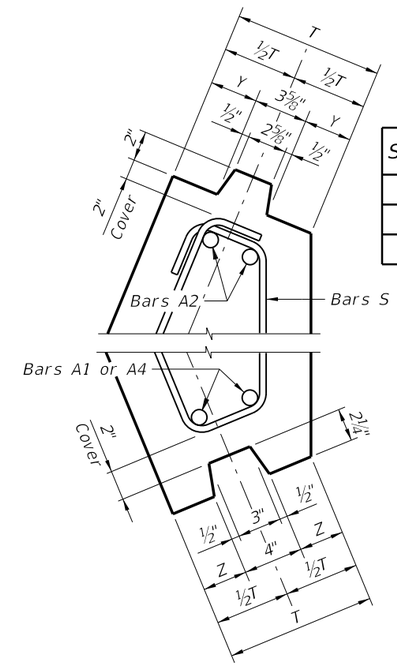

DETAIL "D"
(TYPE "B1" PILE SHOWN, TYPE "B2" PILE OPPOSITE HAND)

SHEET PILE DIMENSIONS		
T (in.)	10	12
Y (in.)	3 3/16	4 3/16
Z (in.)	3	4

BAR BENDING DIAGRAMS

STIRRUP DIMENSIONS (T = 10")

Ø	BAR MARK	R1	R2	R3	R4	R5	R6	R7	R8
30°	S1	11¼"	9¾"	1'-6½"	2½"	5"	4¾"	5½"	4¼"
	S2	1'-1½"	9¾"	1'-8¾"	2½"	4½"	5½"	5¾"	4¼"
	S3	11¼"	8"	1'-6"	1¼"	5"	4½"	4½"	5"
	S4	11¼"	4¼"	1'-1¾"	1¾"	5"	3¾"	2½"	6¼"
45°	S1	11½"	8"	1'-4"	4"	5½"	6½"	8"	4"
	S2	1'-1¾"	8"	1'-5¾"	4"	4½"	7½"	8"	4"
	S3	11½"	6¾"	1'-4"	2¼"	5½"	6¾"	6¾"	5½"
	S4	11½"	3½"	1'-0"	3"	5½"	5"	3½"	7"
60°	S1	1'-0"	6"	1'-0¾"	5¼"	6"	7¼"	10¼"	3"
	S2	1'-2"	6"	1'-2¾"	5¼"	4¾"	8¾"	10½"	3"
	S3	1'-0"	4¾"	1'-1½"	3¼"	6"	8"	8¾"	5¼"
	S4	1'-0"	2½"	10"	4½"	6"	5¾"	4"	7½"

STIRRUP DIMENSIONS (T = 12")

Ø	BAR MARK	R1	R2	R3	R4	R5	R6	R7	R8
30°	S1	11½"	10"	1'-6"	3½"	7"	4¾"	5¾"	6"
	S2	1'-1¾"	10"	1'-8¼"	3½"	6½"	5¼"	5¾"	6"
	S3	11½"	8¼"	1'-5¾"	2"	7"	4¾"	4½"	7¼"
	S4	11½"	4"	1'-1¼"	2¼"	7"	3¾"	2½"	8¼"
45°	S1	1'-0"	8½"	1'-3¼"	5¼"	7½"	6¼"	8½"	5¼"
	S2	1'-2¼"	8½"	1'-5½"	5¼"	6½"	7¼"	8½"	5¼"
	S3	1'-0"	7"	1'-4"	3"	7½"	6¾"	7"	7¼"
	S4	1'-0"	3½"	11¾"	3¾"	7½"	5"	3½"	9"
60°	S1	1'-0½"	6¼"	11¾"	7"	8"	6¾"	10¾"	4"
	S2	1'-2¾"	6¼"	1'-2"	7"	6¾"	8"	10¾"	4"
	S3	1'-0½"	5"	1'-1½"	4"	8"	8"	9"	7"
	S4	1'-0½"	2½"	9½"	5½"	8"	5½"	4¼"	9¼"

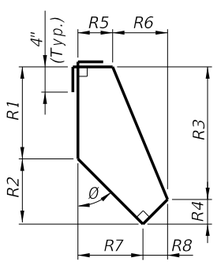

1 - PIECE

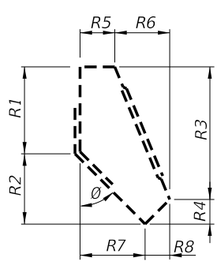

2 - PIECE

BARS S1 & S2

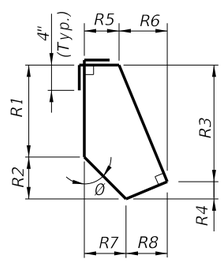

BARS S3 & S4

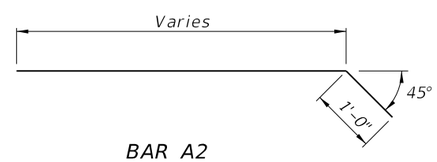

BAR A2

NOTES:

1. This drawing includes details for precast concrete corner piles for 10" and 12" thick sheet pile systems. The details apply equally to both thicknesses.
2. The bar configurations shown in Sections A-A and B-B shall be used for Ø angles between 15° and 75°. For Ø angles not shown, the reinforcing bar dimensions may be interpolated or extrapolated from the stirrup dimensions shown.
3. All bar dimensions are out-to-out.
4. Bars A are #8 and Bars S are #4.
5. Values for Stirrup Dimensions are shown for Ø equal to 30°, 45° & 60° only.
6. At the Contractor's option Bars S may be fabricated as a 2 piece bar with a minimum lap length of 1'-6", as shown in Bar Bending Diagrams.
7. If Type "B1" or "B2" pile is used as a Starter Pile show tongue on both sides of pile from Dim. X down. Show dimensions for Bars S2, S3 & S4 in shop drawings.
8. If tongue must be on the opposite side from that shown all dimensions and Bars A, S2, S3 and S4 will be the same but opposite hand.
9. For Dimensions L, X and Angle Ø, see Sheet Pile Data Table in Structures Plans.

TYPE "B1" AND "B2" - VARIABLE ANGLE CORNER PILE

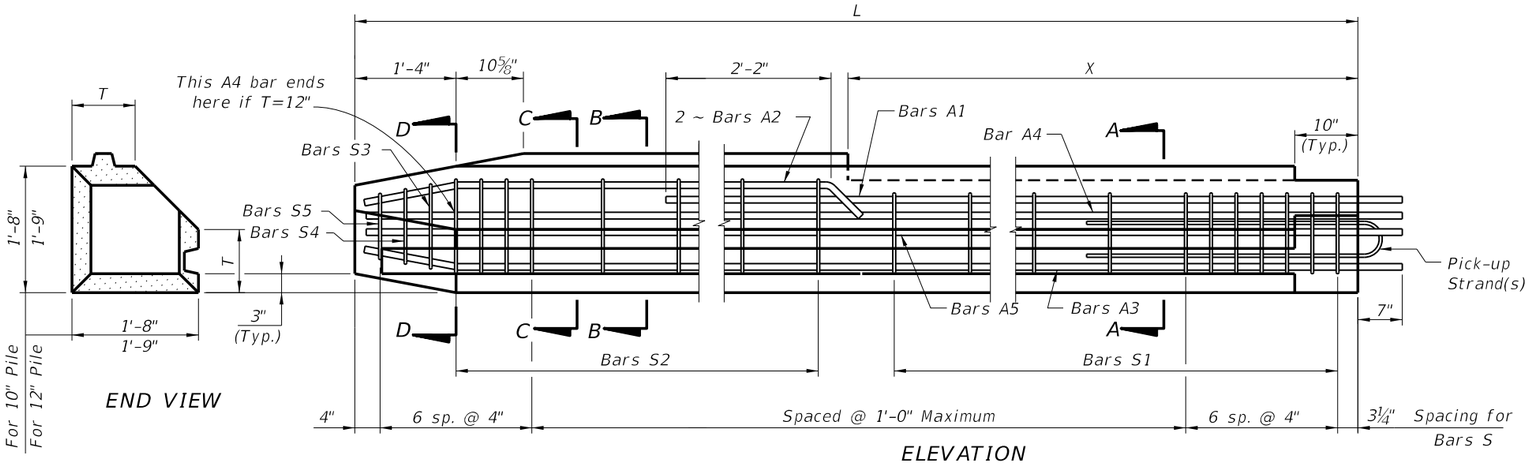

ELEVATION
(TYPE "C1" PILE SHOWN, TYPE "C2" PILE OPPOSITE HAND)

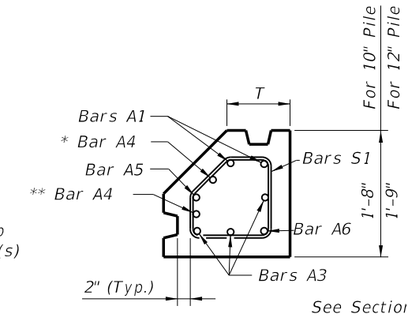

SECTION A-A

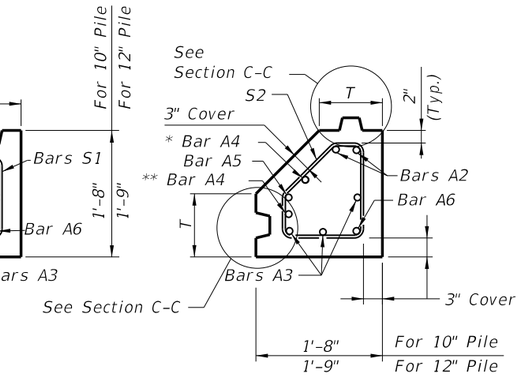

SECTION B-B

* This Bar A4 shall be 1'-2" shorter than other A4 bars for T = 12".

** This Bar A4 (not shown in elevation) is included only if T = 12".

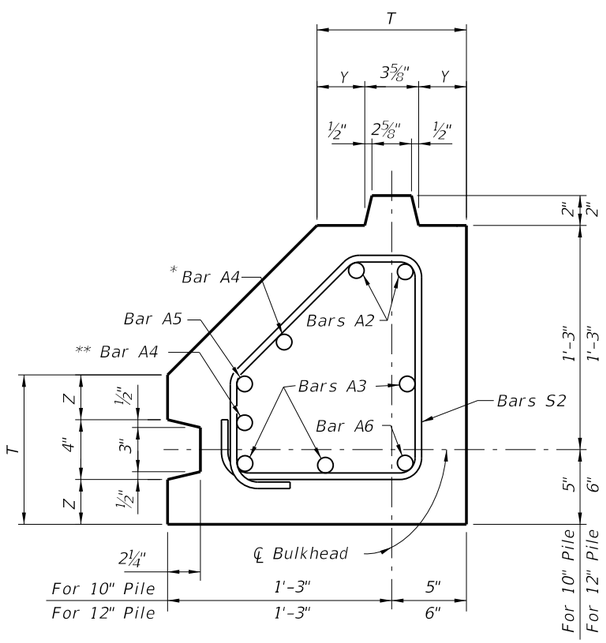

SECTION C-C (T=10" or 12")

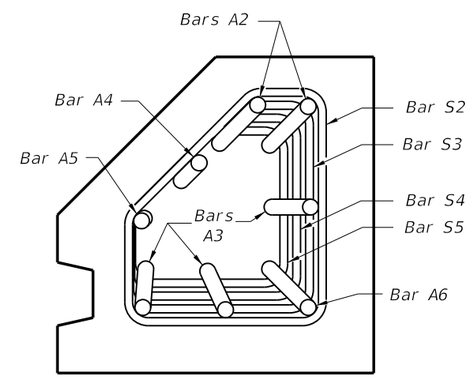

SECTION D-D (T=10")

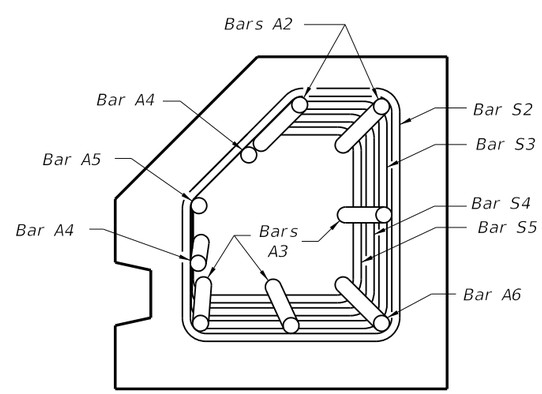

SECTION D-D (T=12")

STIRRUP DIMENSIONS					
θ	T (in.)	BAR MARK	R1	R2	R3
90°	10	S1	7"	5¾"	7"
		S2	7"	8"	4¾"
		S3	6¼"	7¼"	4¾"
		S4	5½"	6½"	4¾"
		S5	4¾"	5¾"	4¾"
	12	S1	9"	4¾"	9"
		S2	9"	7"	6¾"
		S3	8¼"	6¼"	6¾"
		S4	7½"	5½"	6¾"
		S5	6¾"	4¾"	6¾"

SHEET PILE DIMENSIONS		
T (in.)	10	12
Y (in.)	3 3/16	4 3/16
Z (in.)	3	4

BAR BENDING DIAGRAMS

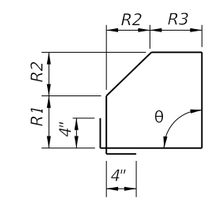

STIRRUPS S

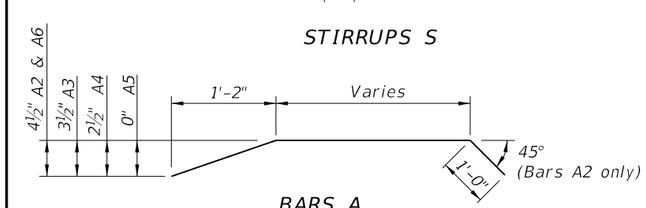

BARS A

Note: All Bar dimensions are out-to-out.

NOTES:
1. All bar dimensions are out-to-out.
2. Bars A are #8 and Bars S are #4.
3. This drawing includes information for precast Corner Piles for 10" and 12" thick Sheet Pile systems. The details apply to both thicknesses but the bar configurations change slightly according to the thickness values used.
4. If Type "C1" or "C2" pile is used as a Starter Pile show tongue on both sides of pile from Dim. X down. Show dimensions for Bars S2, S3, S4 & S5 in shop drawings.
5. If tongue must be on opposite side (Groove Side) from that shown, all dimensions and reinforcement shall follow the corresponding Tongue or Groove side.
6. For Dimensions L and X see Sheet Pile Data Table in Structures Plans.

TYPE "C1" AND "C2" - RIGHT ANGLE CORNER PILE

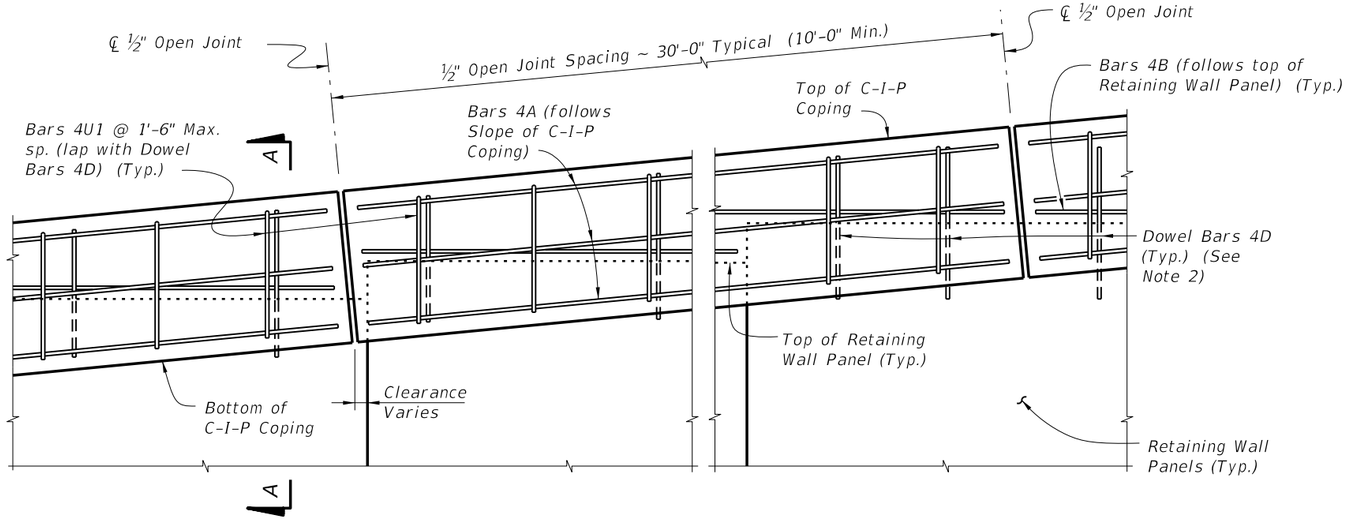

C-I-P COPING - PARTIAL ELEVATION VIEW

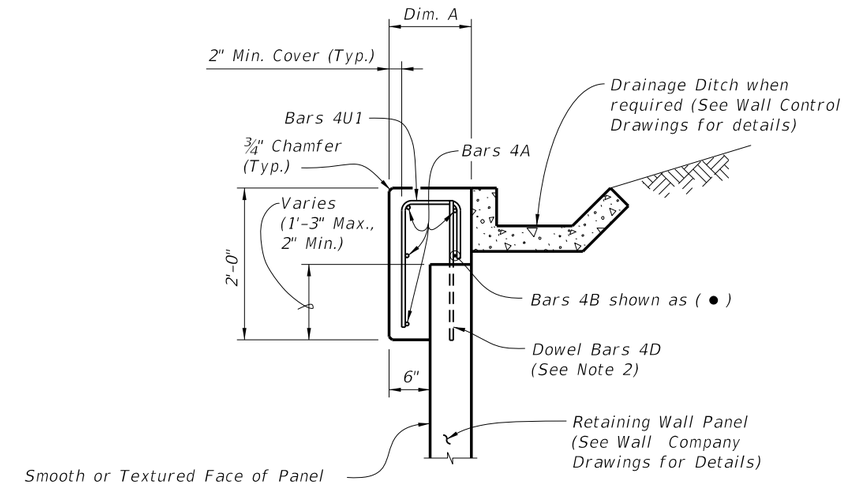

SECTION A-A
C-I-P COPING

Dim. A	Panel width + 6"
Dim. B	Panel width + 1'-0" Min.

PRECAST AND C-I-P COPING NOTES:

1. Provide Class II concrete for slightly aggressive environments or Class IV for moderately or extremely aggressive environments.
2. Dowel Bars 4D extend 1'-0" above the top of retaining wall panel. Field cut as necessary to maintain 2" minimum cover. See Wall Company Drawings for number and spacing of Dowel Bars 4D.
3. Payment for Dowel Bars 4D, Buildup Concrete and Coping will be made under Retaining Wall System (Permanent).

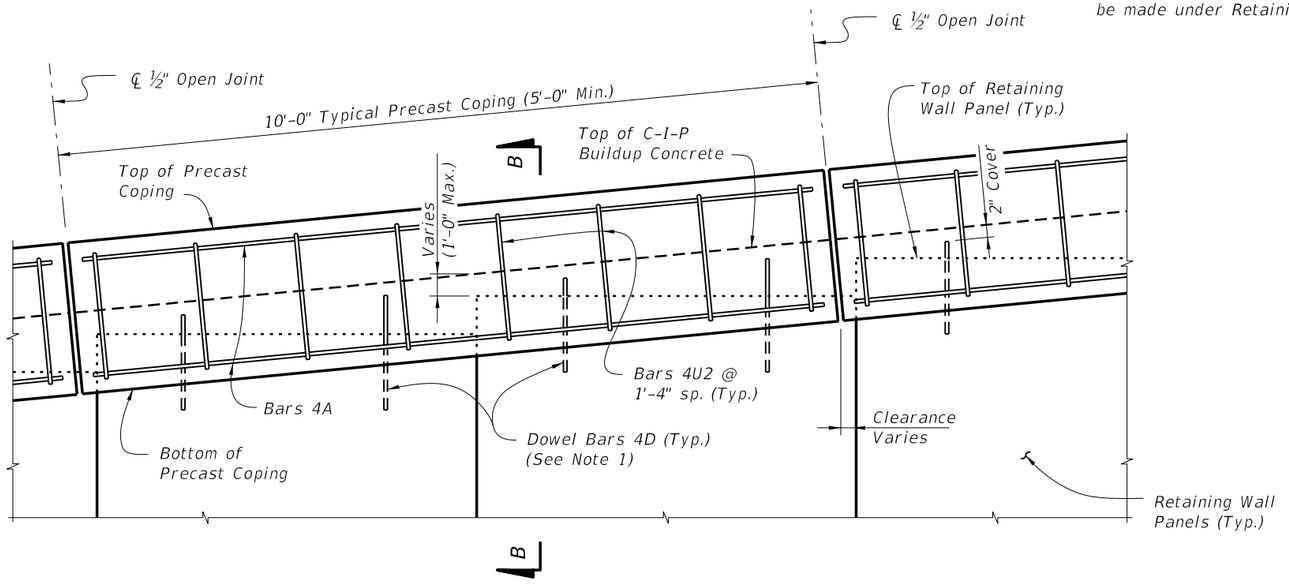

PRECAST COPING - PARTIAL ELEVATION VIEW

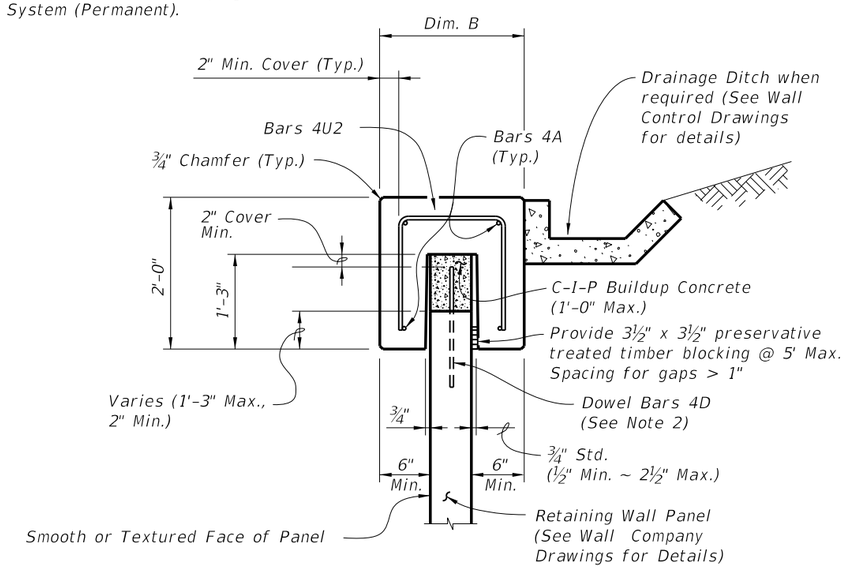

SECTION B-B
PRECAST COPING

REINFORCING STEEL BENDING DIAGRAMS - PRECAST AND C-I-P COPINGS

BILL OF REINFORCING STEEL

MARK	SIZE	LENGTH (L) ## S or M	LENGTH (L) ## E
A	4	AS REQD.	AS REQD.
B	4	AS REQD.	AS REQD.
D	4	2'-0"	2'-0"
U1	4	Panel width + 4"	Panel width + 4"
U2	4	Dim. B - 4"	Dim. B - 4"
U3	4	Dim. C - 4"	Dim. C - 6"

REINFORCING STEEL NOTES:

1. All bar dimensions in the bending diagrams are out to out.
2. All reinforcing steel at the open joints will have a 2" minimum cover.
3. Bars 4A may be continuous or spliced at the construction joints. Lap splices for Bars 4A will be a minimum of 1'-8".
4. The Contractor may use Welded Wire Reinforcement (WWR) when approved by the Engineer. WWR must consist of Deformed wire meeting the requirements of Specification Section 931.

S = Slightly Aggressive
M = Moderately Aggressive
E = Extremely Aggressive

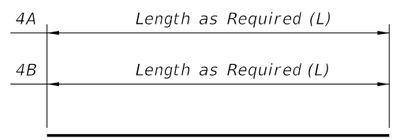

BARS 4A & 4B

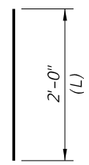

DOWEL BAR 4D

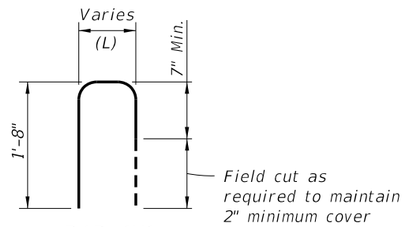

BAR 4U1

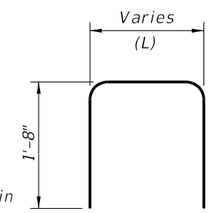

BAR 4U2

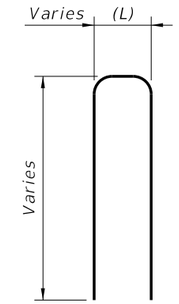

BAR 4U3

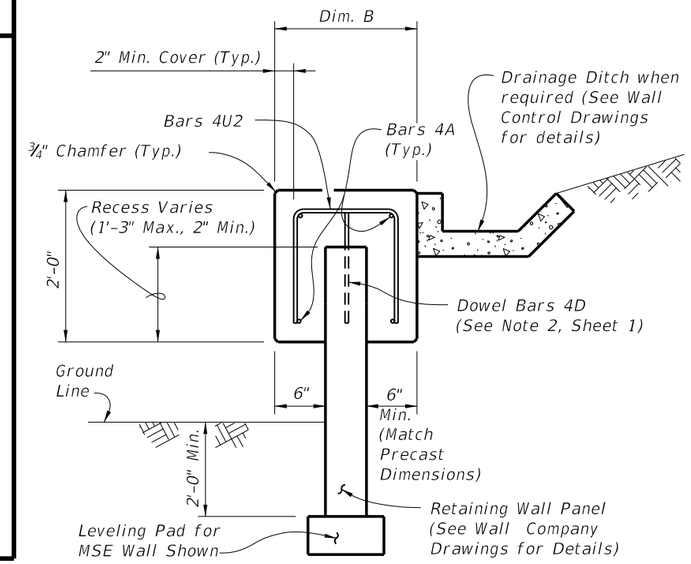

C-I-P COPING USED WITH PRECAST COPING

Note: When precast coping units do not fit the entire length of the retaining wall, use this similar C-I-P coping for short portions between precast coping units. This C-I-P coping may also be used for vertical copings.

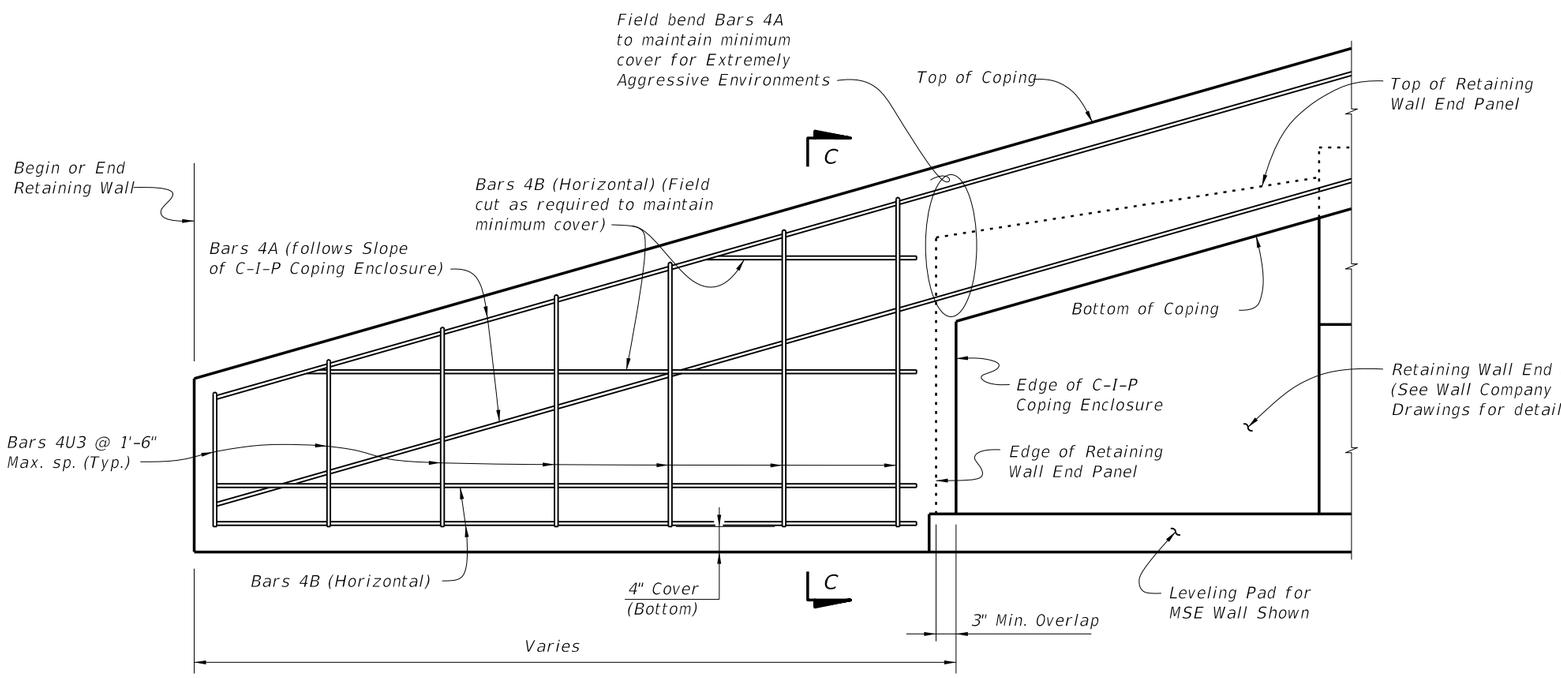

C-I-P COPING ENCLOSURE DETAIL

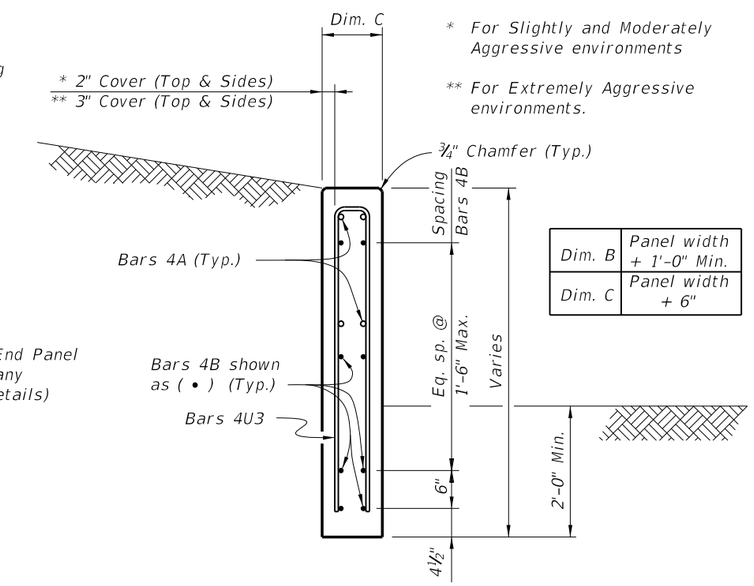

* For Slightly and Moderately Aggressive environments

** For Extremely Aggressive environments.

Dim. B	Panel width + 1'-0" Min.
Dim. C	Panel width + 6"

SECTION C-C

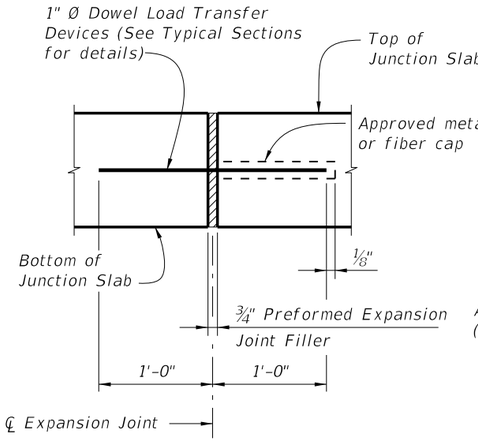

EXPANSION JOINT DETAIL

(Junction Slab expansion joints are to coincide with ¾" open joints in Traffic Railing)

CROSS REFERENCE: For Detail "A", see Sheet 2.

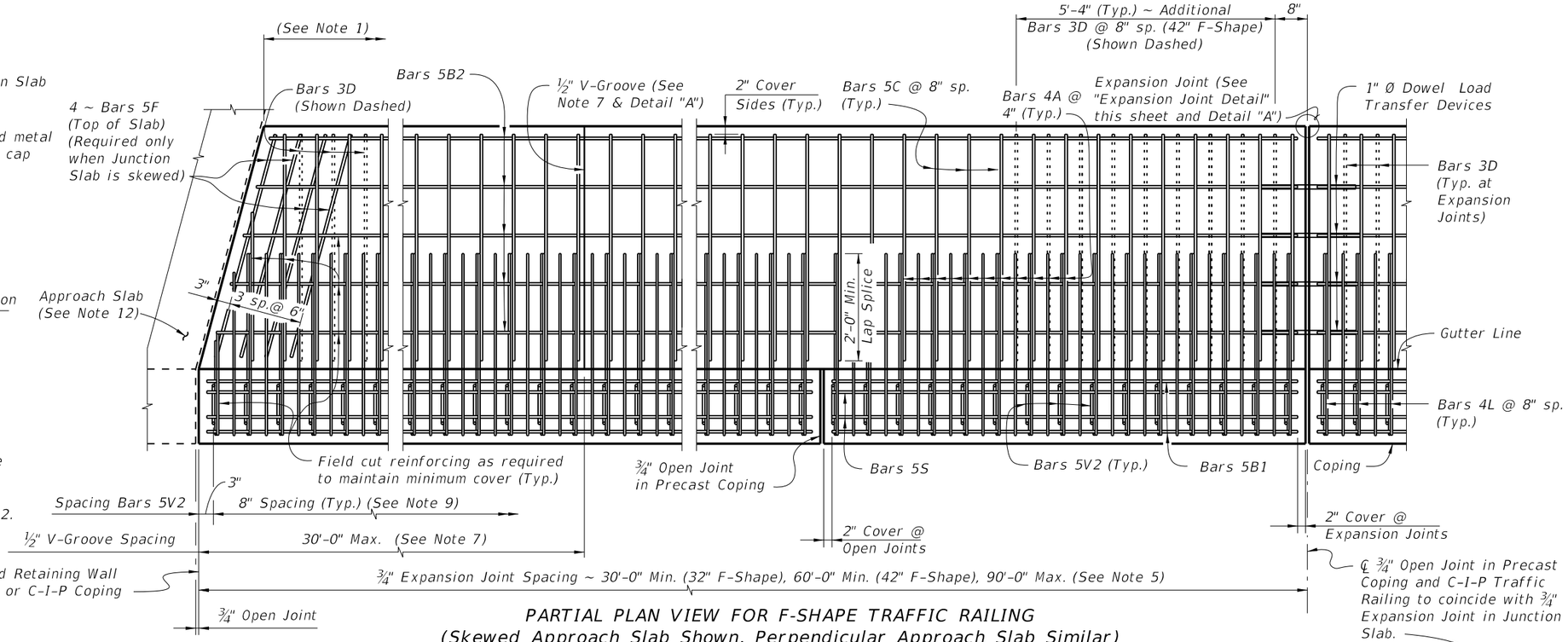

PARTIAL PLAN VIEW FOR F-SHAPE TRAFFIC RAILING
(Skewed Approach Slab Shown, Perpendicular Approach Slab Similar)
(Precast Coping Shown, C-I-P Coping Similar) (Traffic Railing not Shown for Clarity)

JUNCTION SLAB NOTES:

1. When a 42" F-Shape Traffic Railing is used with precast copings, provide Bars 3D @ 8" spacing between Bars 5C within 6'-0" of Expansion Joints.
2. Construct the Junction Slab level transversely and expansion joints plumb; do not construct the junction slab or C-I-P coping perpendicular to the roadway surface. Slip forming of Coping and/or junction slab is not permitted.
3. Provide Class II concrete for slightly aggressive environments or Class IV for moderate or extremely aggressive environments.
4. Dowel Load Transfer Devices will be ASTM A 36 smooth round bar and hot-dip galvanized in accordance with Specification Section 962. Install Dowel Load Transfer Devices in accordance with Specification Section 350.
5. Construct ¾" Expansion Joints in junction slabs and C-I-P copings plumb and perpendicular or radial to the Gutter Line. Provide at 90'-0" maximum intervals as shown. Provide 3"x3" Mortar plugs in open joints at the base of traffic railings to contain runoff.
6. Provide and install Preformed Expansion Joint Filler in accordance with Specification Section 932.
7. Construct ½" V-Grooves in junction slabs and C-I-P copings plumb and provide at 30'-0" maximum intervals as shown. Space V-Grooves equally between ¾" Expansion Joints and/or Begin or End Junction Slab. V-Groove locations are to coincide with V-Groove locations in the Traffic Railing.
8. Shoulder or Roadway Pavement is required on top of the junction slab for its entire length on the traffic side of the Traffic Railing. See Typical Sections on Sheet Nos. 2 and 3 for details.
9. Spacing shown is along the Gutter Line.
10. On MSE Walls provide, Dowel Bars 4D and extend to 7" above the top of retaining wall panel. Field cut as necessary to maintain 2" minimum cover to the top of the buildup concrete. See Wall Company Drawings for number and spacing of Dowel Bars 4D.
11. Work this Index with the following:
    Index No. 420 - Traffic Railing - (32" F-Shape)
    Index No. 425 - Traffic Railing - (42" F-Shape).
12. The following Indexes contain details of the intersection of the retaining wall at approach slabs:
    Index No. 20900 - Approach Slabs (Flexible Pavement Approaches)
    Index No. 20910 - Approach Slabs (Rigid Pavement Approaches)

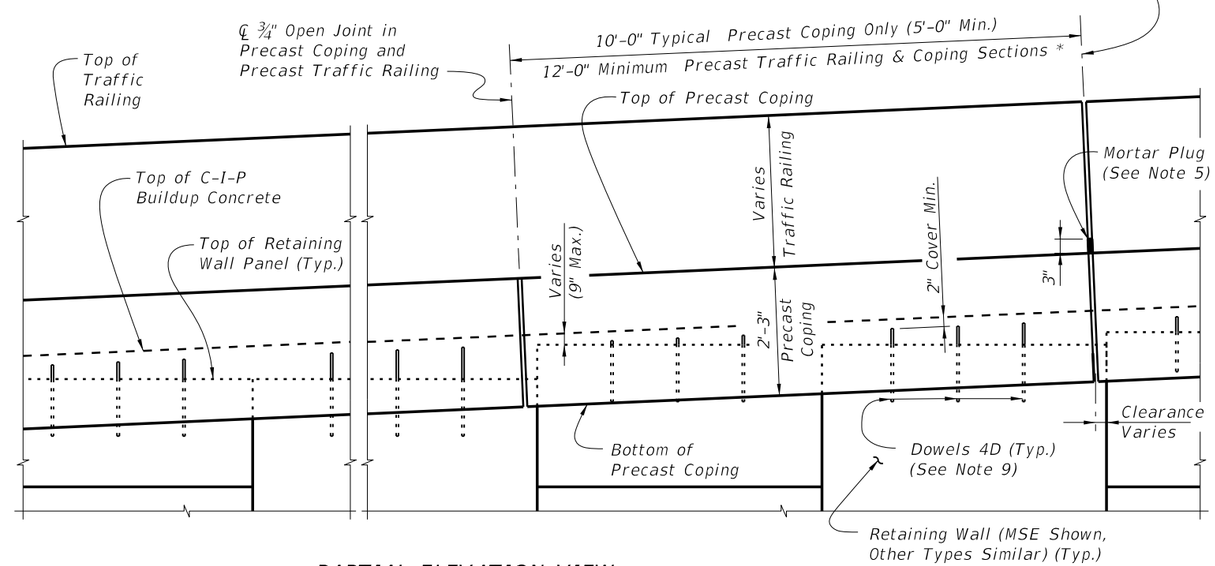

PARTIAL ELEVATION VIEW
(Precast Coping and Junction Slab Reinforcing not Shown for Clarity)
(Precast Coping Shown, C-I-P Coping Similar)

* C-I-P End Section must be ≥ 12'-0".

F-SHAPE TRAFFIC RAILINGS

LAST REVISION	REVISION	DESCRIPTION:			INDEX NO.	SHEET NO.
07/01/13			FDOT 2014 DESIGN STANDARDS	WALL COPING WITH TRAFFIC RAILING/JUNCTION SLAB	6110	1 of 6

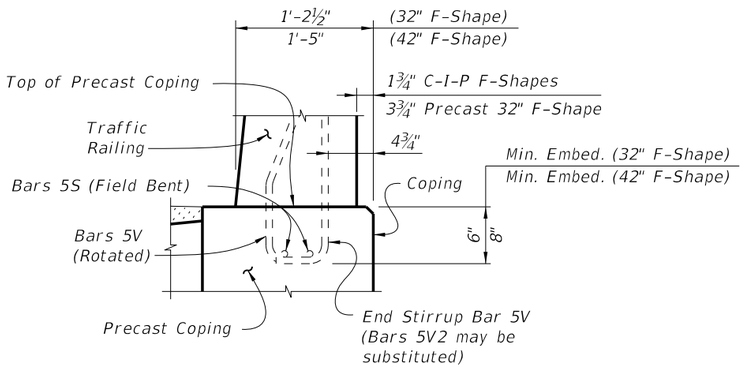

PARTIAL END VIEW OF TRAFFIC RAILING END TRANSITION FOR GUARDRAIL ATTACHMENT (Showing Bars 5V and Bars 5S) (Precast Coping Shown, C-I-P Coping Similar)

NOTE: See Index No. 420 and Index No. 425, Detail "A" for details.

ESTIMATED QUANTITIES FOR PRECAST COPING		
ITEM	UNIT	QUANTITY
Concrete (Precast Coping Only)	CY/LF	0.083
Concrete (Precast Barrier & Coping)	CY/LF	0.169
Concrete (C-I-P Junction Slab)	CY/LF	0.185
Reinforcing Steel (Precast Coping & Traffic Railing)	LB/LF	52.67
Reinforcing Steel (C-I-P Junction Slab) (Typ.)	LB/LF	12.52
Additional Reinf. @ Expansion Joints (Dowels)	LB	21.36

(The above concrete quantities are based on a max. superelevation of 6.25% and a 32" F-Shape Traffic Railing.

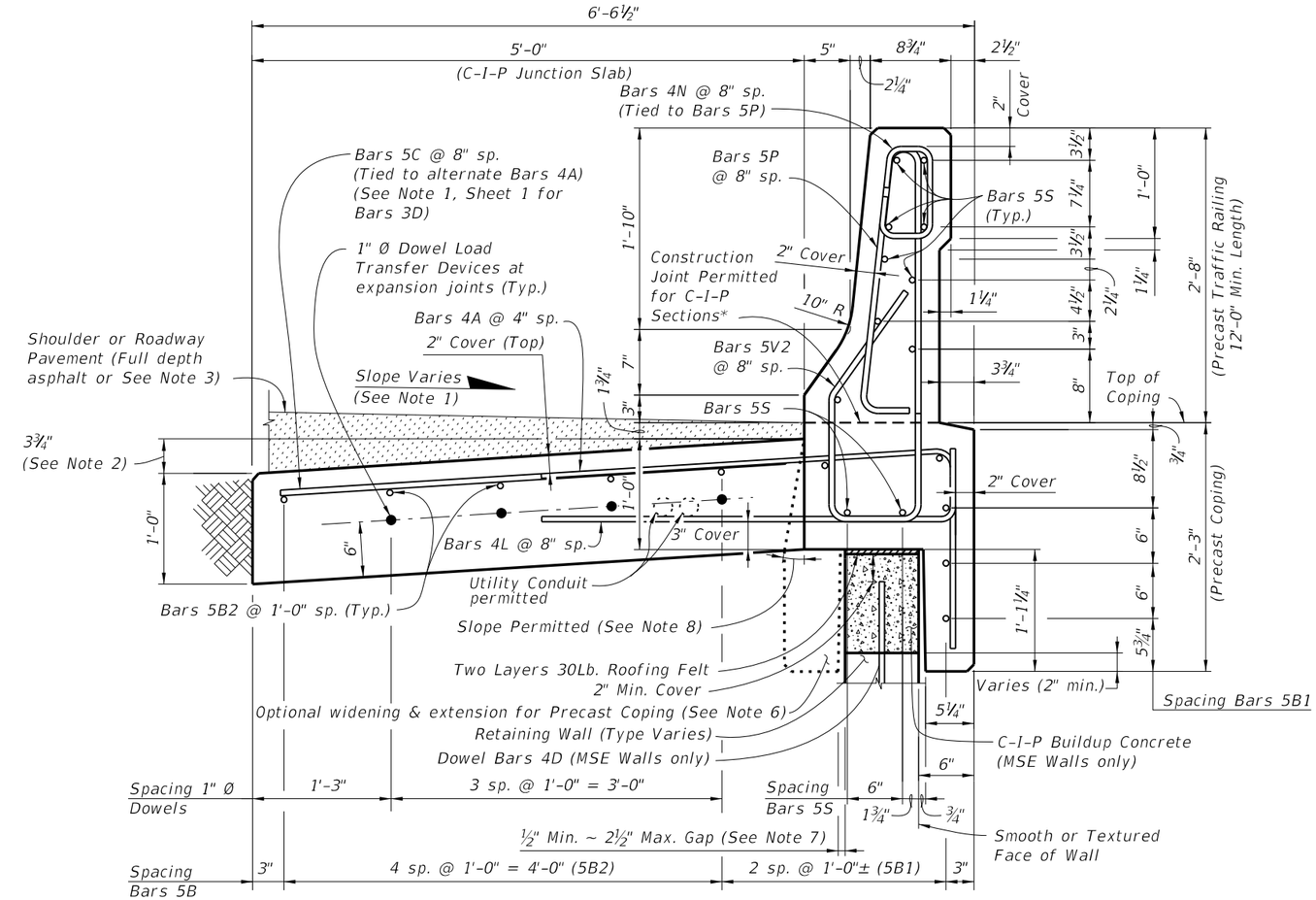

TYPICAL SECTION THRU PRECAST* 32" F-SHAPE TRAFFIC RAILING AND COPING WITH C-I-P JUNCTION SLAB

* C-I-P Traffic Railing and Coping Sections using precast dimensions and reinforcement are permitted at End Sections, Drainage Inlets and Light Pole Pedestals if slip forming is not used.

NOTES:

1. Match Cross Slope of Travel Lane or Shoulder.
2. The 3¾" dimension corresponds to a maximum superelevation of 6.25%. For steeper superelevations increase this dimension to match roadway superelevation.
3. For Rigid Pavement (Concrete), Junction Slab may be thickened to match finish grade.
4. Minimum length of Junction Slab between expansion joints is 30'-0".
5. At the Contractor's option, mechanical couplers may be used to splice reinforcing. Complete details, including reinforcement lengths are required in the Shop Drawings. Provide mechanical couplers in accordance with Specification Section 415. Mechanical couplers shall develop 125% of the bar yield strength.
6. Contractor to maintain stability of precast coping/traffic railing prior to junction slab completion. In the Shop Drawings, show reinforcement for optional extension required for stability, shipping and handling. Maintain 2" minimum concrete cover.
7. When the air gap between the precast coping extension and retaining wall exceeds 2½", fill gap with full depth Expanded Polystyrene to provide a maximum 2½" air gap.
8. Angle varies ~ 0° min., 20° max.

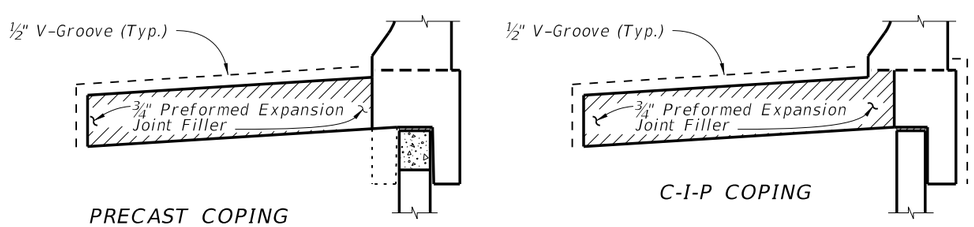

DETAIL "A"

(Showing Locations of ½" V-Grooves and ¾" Preformed Expansion Joint Filler)

F-SHAPE TRAFFIC RAILINGS

LAST REVISION	REVISION	DESCRIPTION:	FDOT 2014 DESIGN STANDARDS	WALL COPING WITH TRAFFIC RAILING/JUNCTION SLAB	INDEX NO.	SHEET NO.
07/01/13					6110	2 of 6

REINFORCING STEEL BENDING DIAGRAMS

BILL OF REINFORCING STEEL

MARK	SIZE	LENGTH		
		PRECAST COPING & 32" F-SHAPE	COPING	
			C-I-P	Precast
A	4	5'-7"	8'-0"	5'-7"
B1	5	11'-6"	N/A	9'-6"
B2	5	AS REQD.	AS REQD.	AS REQD.
C	5	4'-8"	N/A	4'-8"
D	3	4'-8"	N/A	4'-8"
F	5	4'-8"	4'-8"	4'-8"
L	4	4'-5"	4'-5"	4'-5"
N	4	2'-6"	N/A	N/A
P	5	5'-7"	5'-7"	5'-7"
S	5	11'-6"	AS REQD.	9'-6"
S1	8	N/A	AS REQD.	9'-6"
V2	5	5'-10"	5'-10"	5'-10"
1" Ø Dowel	Smooth Bar	2'-0"	2'-0"	2'-0"

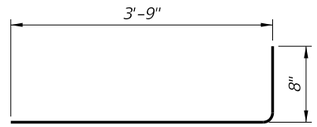

BARS 4L

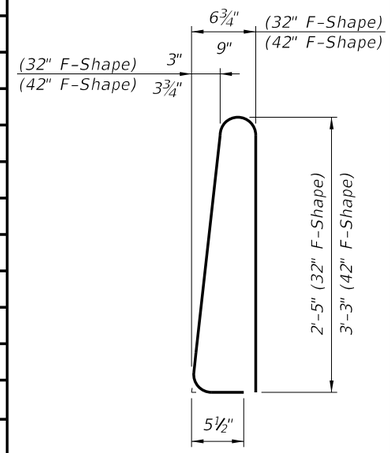

STIRRUP BAR 5P

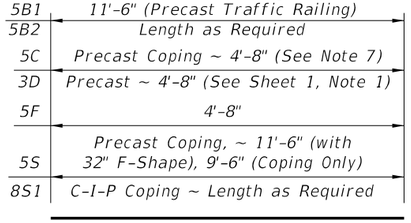

BARS 5B, 5C, 5F & 5S

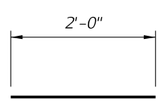

1" Ø DOWEL

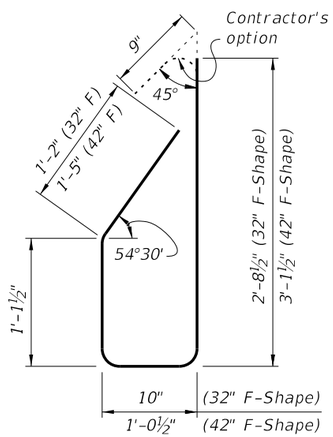

STIRRUP BAR 5V2

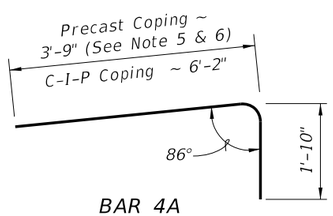

BAR 4A

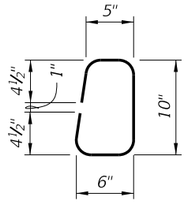

STIRRUP BAR 4N

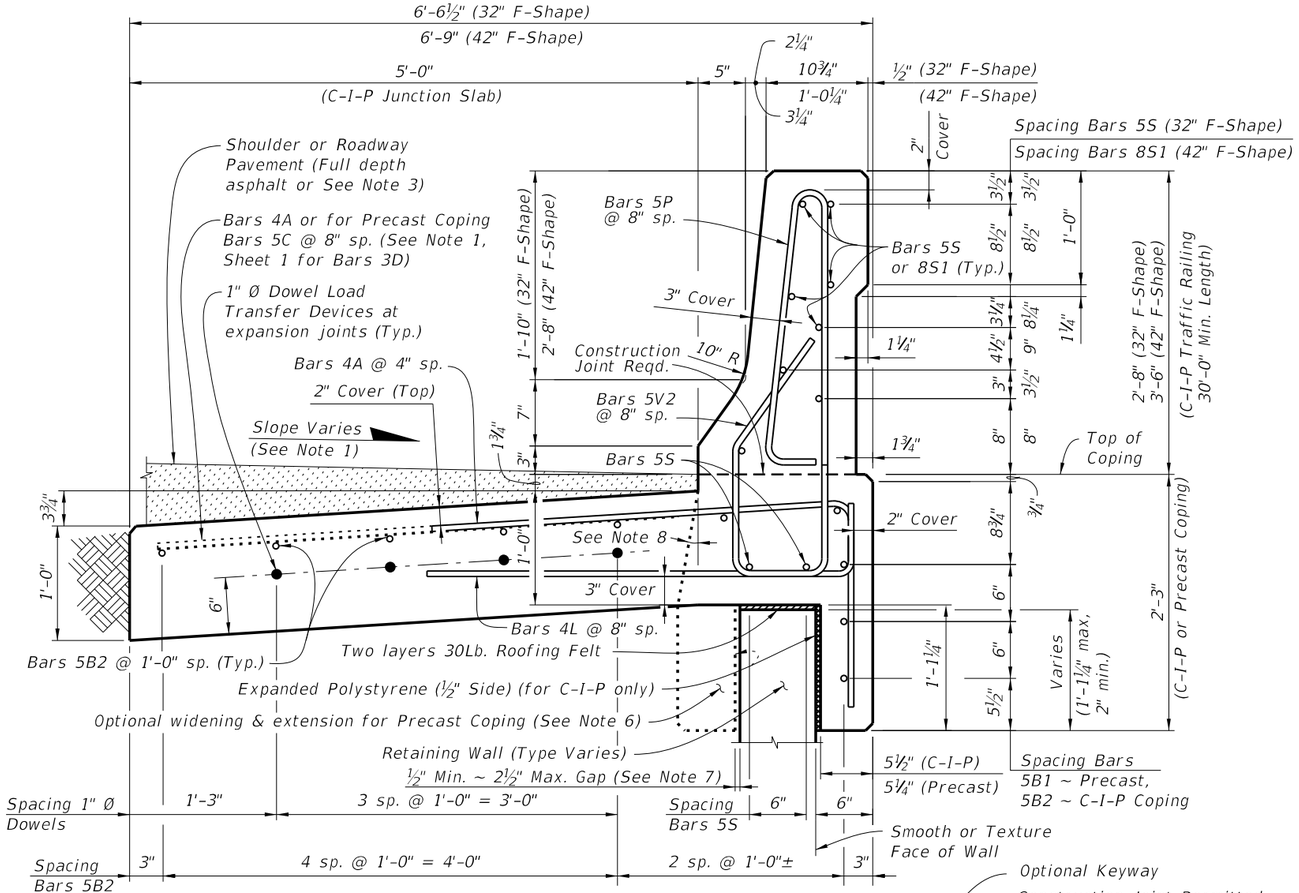

TYPICAL SECTION THRU C-I-P TRAFFIC RAILING
WITH C-I-P JUNCTION SLAB AND C-I-P COPING
(PRECAST COPING SIMILAR WITH C-I-P BUILDUP)

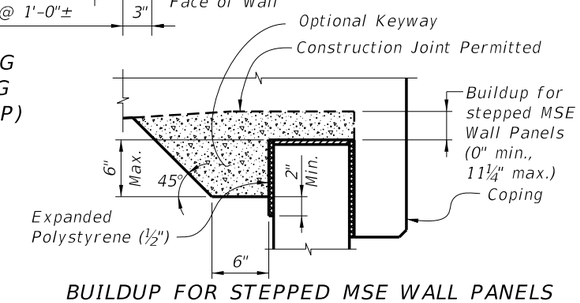

BUILDUP FOR STEPPED MSE WALL PANELS
AND C-I-P COPING

NOTES:

1. Match Cross Slope of Travel Lane or Shoulder.
2. The 3¾" dimension corresponds to a maximum superelevation of 6.25%. For steeper superelevations increase this dimension to match roadway superelevation.
3. For Rigid Pavement (Concrete), Junction Slab may be thickened to match finish grade.
4. Minimum length of Junction Slab between expansion joints is 30'-0" for 32" F-Shape or 60'-0" for 42" F-Shape.
5. See Index No. 420 & 425 for additional Traffic Railing Details.
6. Contractor to maintain stability of precast coping prior to junction slab completion. In the Shop Drawings, show reinforcement for optional extension required for stability, shipping and handling. Maintain 2" minimum concrete cover.
7. When the air gap between the precast coping extension and retaining wall exceeds 2½", fill gap with full depth Expanded Polystyrene to provide a maximum 2½" air gap.
8. Angle varies ~ 0° min., 20° max.

REINFORCING STEEL NOTES:

1. All bar dimensions in the bending diagrams are out to out.
2. All reinforcing steel at expansion and open joints will have a 2" minimum cover.
3. Lap splices for Bars 5B & 5S will be a minimum of 2'-0".
4. For Precast Copings only, lap splice Bars 4A with Bars 5C. Lap splices will be a minimum of 2'-0".
5. The Contractor may use either full length Bars 4A or lap splice with Bars 5C at alternate Bars 4A for C-I-P Copings.
6. Dimension shown is for lap splice option. For mechanical coupler option, this dimension is 1'-4½" (32" F-Shape) or 1'-7" (42" F-Shape).
7. Dimension shown is for lap splice option. For mechanical coupler option, this dimension is 4'-8".
8. The Contractor may use Welded Wire Reinforcement (WWR) when approved by the Engineer. WWR must consist of deformed wire meeting the requirements of Specification Section 931.
9. Contractor may use a single #5 stirrup in lieu of two bars for 5P and 5V2.

ESTIMATED QUANTITIES FOR C-I-P COPING

ITEM	UNIT	QUANTITY
Concrete (Traffic Railing not Included)	CY/LF	0.268
Reinforcing Steel (Typical) excluding Bars 5V2 and 5S (Typ.)	LB/LF	30.89
Additional Reinf. @ Expansion Joint (Dowels)	LB/LF	21.36

(The above concrete quantities are based on a max. superelevation of 6.25%, beneath a 32" F-Shape Traffic Railing on an MSE Wall).

F-SHAPE TRAFFIC RAILINGS

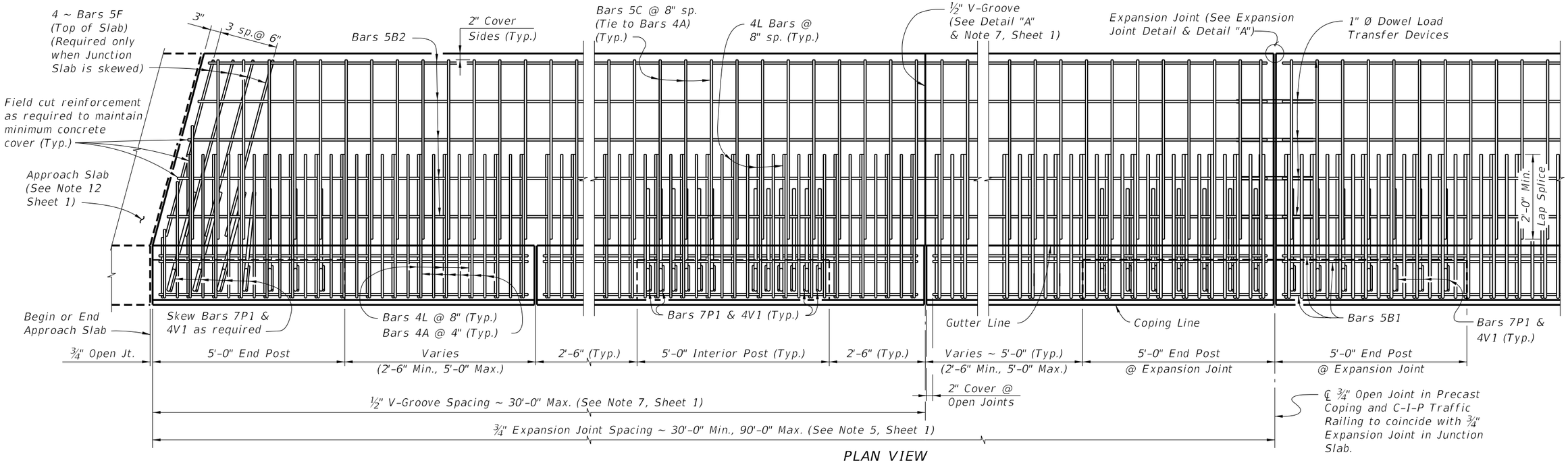

PLAN VIEW
(Skewed Approach Slab shown, Perpendicular Approach Slab similar)
(Precast Coping shown, C-I-P Coping similar)
(Traffic Railing reinforcement not shown, except for Bars 7P1 & 4V1)

CROSS REFERENCES:
1. For Detail "A" see Sheet 2.
2. For "Expansion Joint Detail" see Sheet 1.
3. For "Junction Slab Notes" see Sheet 1.

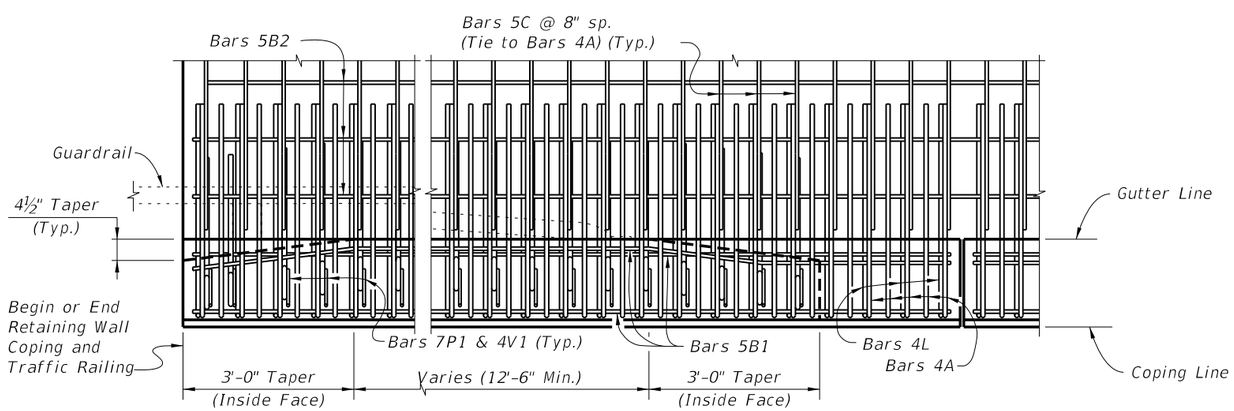

PARTIAL PLAN VIEW OF GUARDRAIL TRANSITION AT BEGIN OR END RETAINING WALL
(Precast Coping shown, C-I-P Coping similar)
(Traffic Railing reinforcement not shown, except for Bars 7P1 & 4V1)

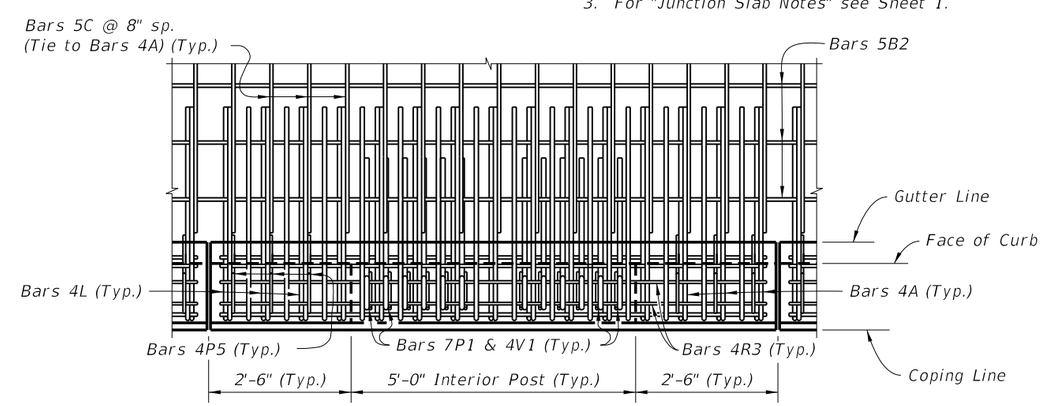

PARTIAL PLAN VIEW OF COPING WITH CURB
(Precast Coping shown, C-I-P Coping similar)
(Traffic Railing reinforcement not shown, except for Bars 4P5, 4R3, 7P1 & 4V1)

CORRAL SHAPE TRAFFIC RAILINGS

LAST REVISION	REVISION	DESCRIPTION:			INDEX NO.	SHEET NO.
01/01/12			FDOT 2014 DESIGN STANDARDS	WALL COPING WITH TRAFFIC RAILING/JUNCTION SLAB	6110	4 of 6

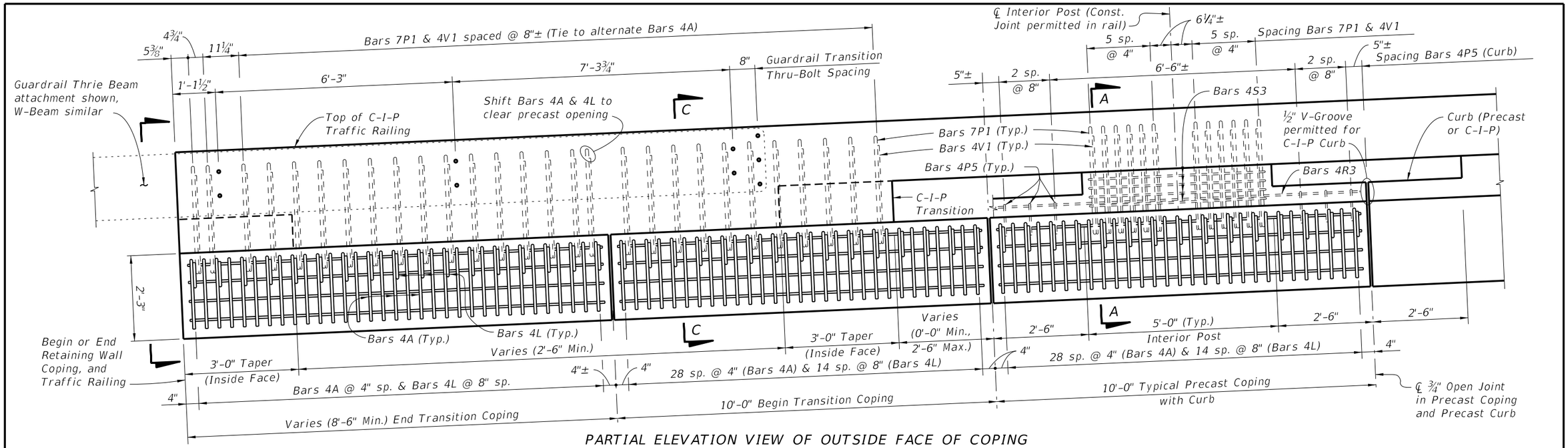

PARTIAL ELEVATION VIEW OF OUTSIDE FACE OF COPING
(End Transition and Typical Precast Coping with Curb shown, C-I-P Coping similar)

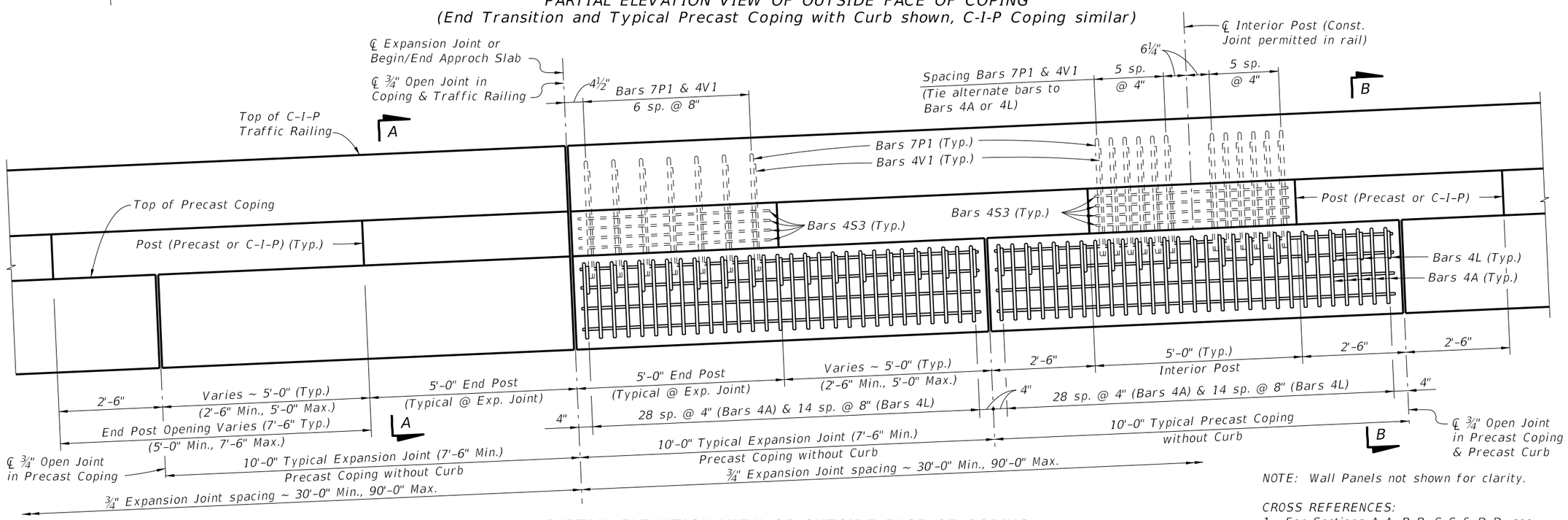

PARTIAL ELEVATION VIEW OF OUTSIDE FACE OF COPING
(Precast Coping at Expansion Joint and Typical Precast Coping without Curb shown, C-I-P Coping similar)

NOTE: Wall Panels not shown for clarity.

CROSS REFERENCES:
1. For Sections A-A, B-B, C-C & D-D, see Sheet 6.
2. For Junction Slab Notes, see Sheet 1.

CORRAL SHAPE TRAFFIC RAILINGS

LAST REVISION	REVISION	DESCRIPTION:			INDEX NO.	SHEET NO.
01/01/12			FDOT 2014 DESIGN STANDARDS	WALL COPING WITH TRAFFIC RAILING/JUNCTION SLAB	6110	5 of 6

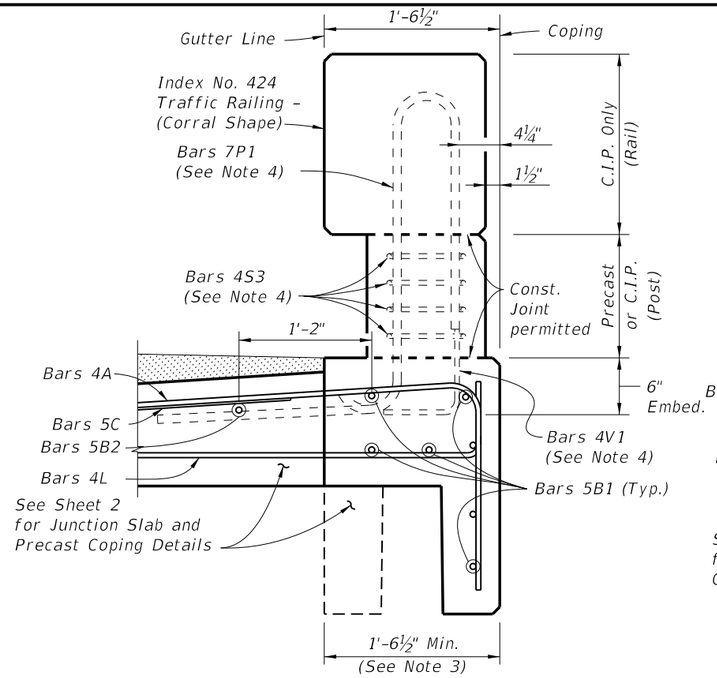

SECTION A-A
(TYPICAL SECTION PRECAST COPING WITHOUT CURB)

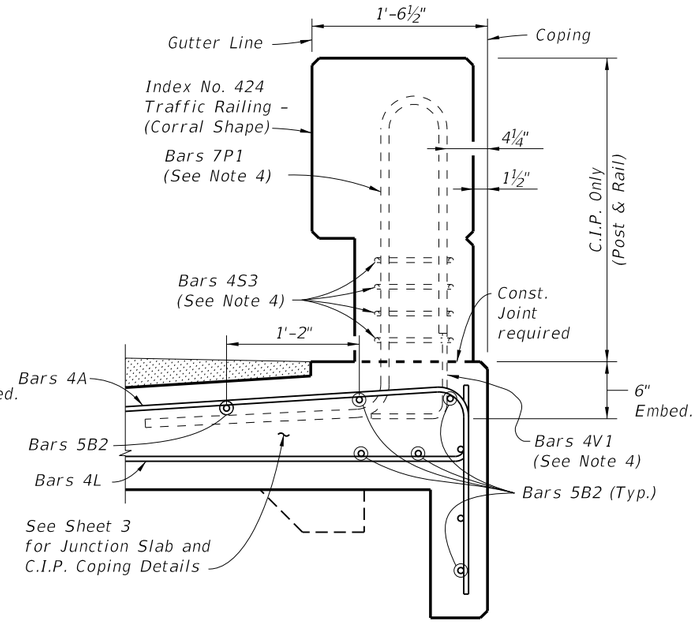

SECTION A-A
(TYPICAL SECTION C.I.P. COPING WITHOUT CURB)

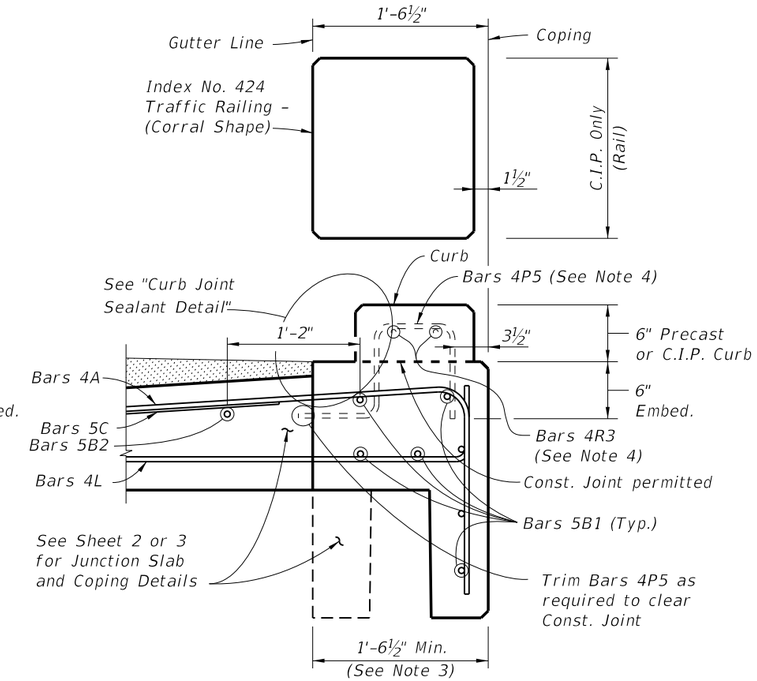

SECTION B-B
(TYPICAL SECTION WITH CURB)
(Precast Coping Shown, C.I.P. Coping Similar)

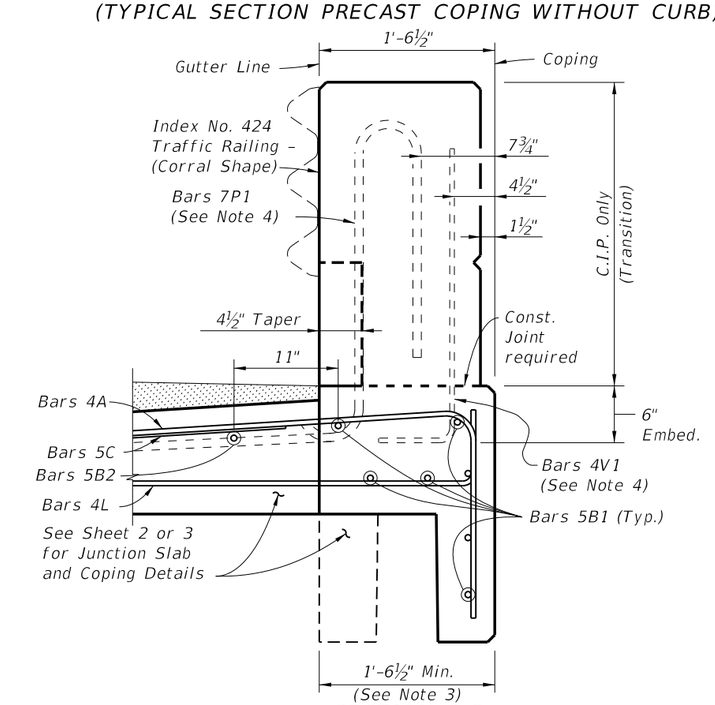

SECTION C-C
(TYPICAL SECTION TRANSITION COPING)
(Precast Coping shown, C.I.P. Coping similar)

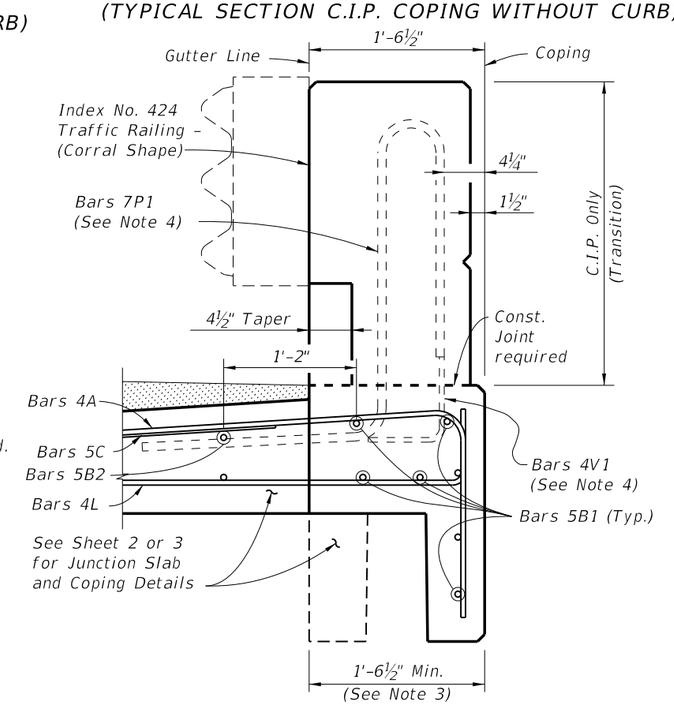

END VIEW D-D
(TYPICAL SECTION TRANSITION COPING)
(Precast Coping shown, C.I.P. Coping similar)

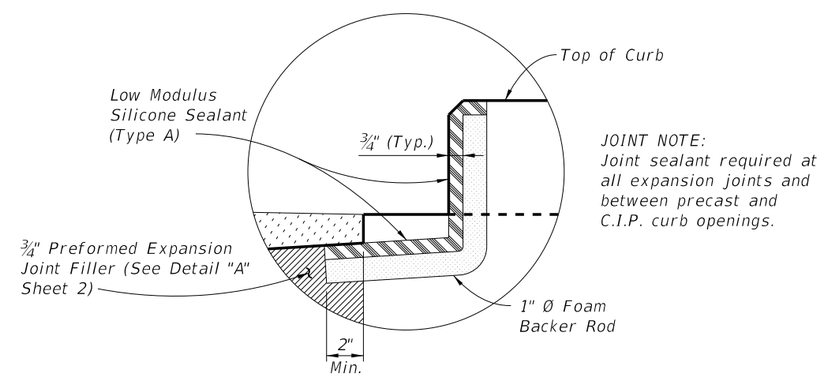

CURB JOINT SEALANT DETAIL

NOTES:
1. See Sheets 2 & 3 for Junction Slab and additional Coping details.
2. Slip Forming of C.I.P. Traffic Railiing is not permitted.
3. Actual width varies depending on type of Retaining Wall used.
4. See Index No. 424 for Traffic Railing details and Bars 7P1, 4P5, 4R3, 4S3 & 4V1. Bars 5R2 and 5U are not required in Retaining Wall Coping.

CORRAL SHAPE TRAFFIC RAILINGS

LAST REVISION	REVISION	DESCRIPTION:	FDOT 2014 DESIGN STANDARDS	WALL COPING WITH TRAFFIC RAILING/JUNCTION SLAB	INDEX NO.	SHEET NO.
01/01/12					6110	6 of 6

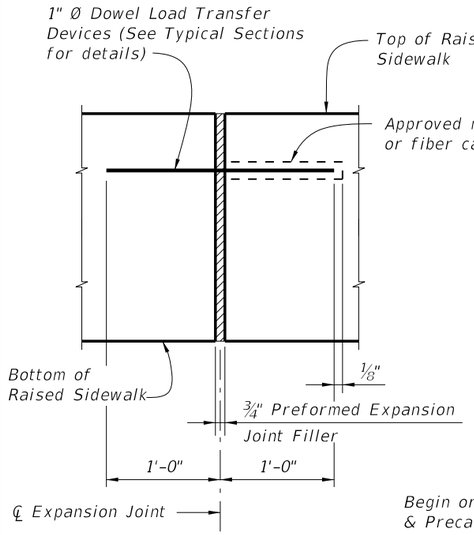

EXPANSION JOINT DETAIL

(Raised Sidewalk expansion joints are to coincide with 3/4" open joints in Traffic Railing)

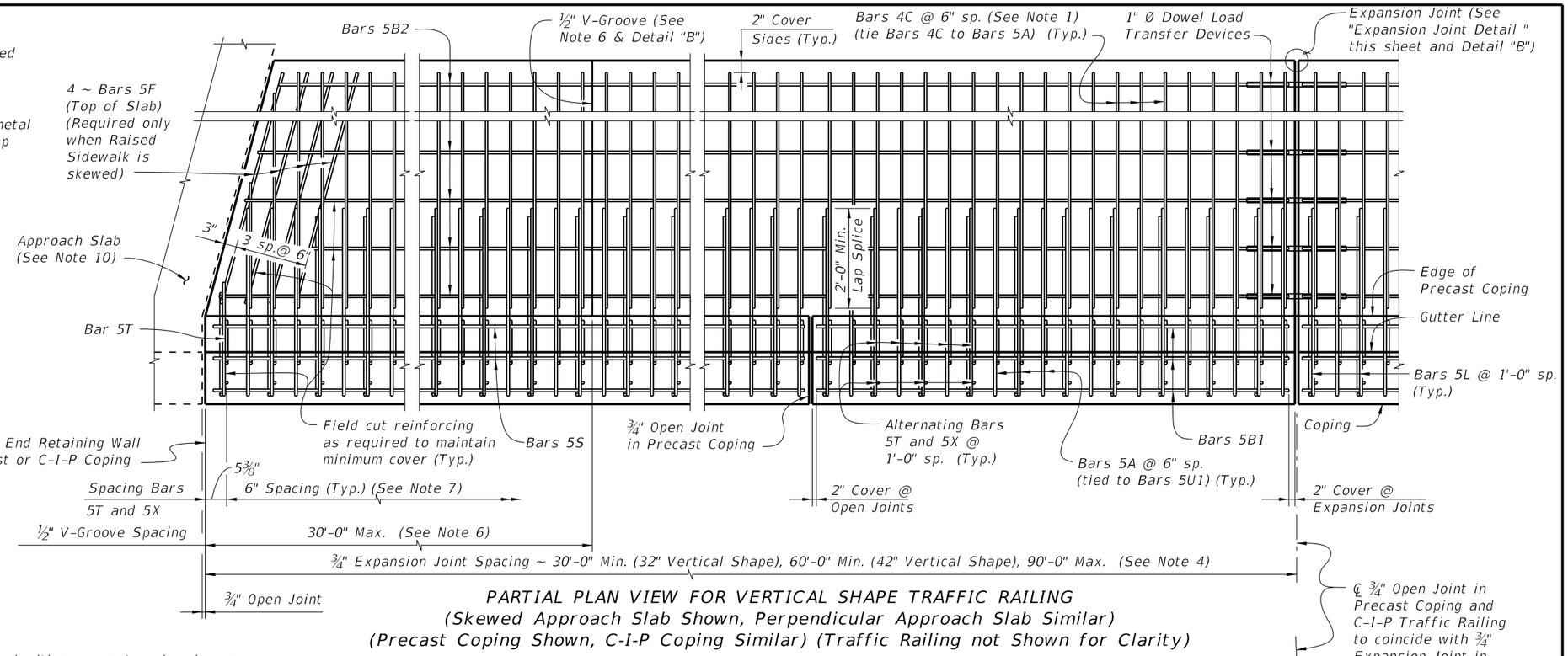

PARTIAL PLAN VIEW FOR VERTICAL SHAPE TRAFFIC RAILING
(Skewed Approach Slab Shown, Perpendicular Approach Slab Similar)
(Precast Coping Shown, C-I-P Coping Similar) (Traffic Railing not Shown for Clarity)

RAISED SIDEWALK NOTES:

1. When a 42" Vertical Shape Traffic Railing is used with a precast coping, increase Bars 4C to Bars 5C or provide Bars 4C @ 4" spacing within 6'-0" of Expansion Joints.
2. Construct the raised sidewalk level transversely and expansion joints plumb; do not construct the raised sidewalk or C-I-P coping perpendicular to the roadway surface. Slip forming of coping and/or raised sidewalk is not permitted.
3. Provide Class II concrete for slightly aggressive environments or Class IV for moderately or extremely aggressive environments.
4. Dowel Load Transfer Devices will be ASTM A 36 smooth round bar and hot-dip galvanized in accordance with Specification Section 962. Install Dowel Load Transfer Devices in accordance with Specification Section 350.
5. Construct 3/4" Expansion Joints in raised sidewalk and C-I-P copings plumb and perpendicular or radial to the Gutter Line. Provide at 90'-0" maximum intervals as shown.
6. Provide and install Preformed Expansion Joint Filler in accordance with Specification Section 932.
7. Construct 1/2" V-Grooves in raised sidewalk and C-I-P coping plumb and provide at 30'-0" maximum intervals as shown. Space V-Grooves equally between 3/4" Expansion Joints and/or Begin or End Raised Sidewalk. V-Groove locations are to coincide with V-Groove locations in the Traffic Railing.
8. Spacing shown is along the Gutter Line.
9. For MSE Walls, provide Dowel Bars 4D and extend 8" above the top of retaining wall panel. Field cut as necessary to maintain 2" minimum cover to the top of the buildup concrete. See Wall Company Drawings for number and spacing of Dowel Bars 4D.
10. Finish Sidewalks in accordance with Specification Section 522.
11. Work this Index with the following:
    Index No. 422 - Traffic Railing - (42" Vertical Shape)
    Index No. 423 - Traffic Railing - (32" Vertical Shape)
12. The following Indexes contain details of the intersection of the retaining wall at approach slabs:
    Index No. 20900 - Approach Slabs (Flexible Pavement Approaches)
    Index No. 20910 - Approach Slabs (Rigid Pavement Approaches)

CROSS REFERENCE: For Detail "B", see Sheet 2.

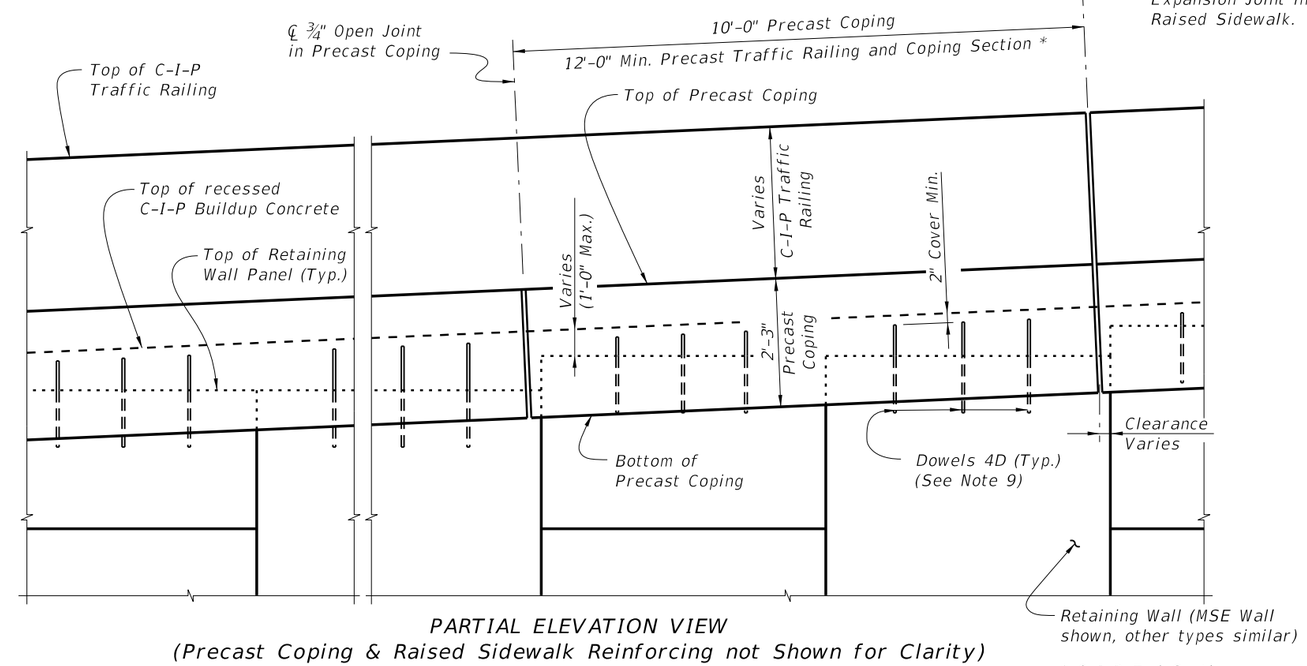

PARTIAL ELEVATION VIEW
(Precast Coping & Raised Sidewalk Reinforcing not Shown for Clarity)
(Precast Coping Shown, C-I-P Coping Similar)

* C-I-P End Section must be ≥ 12'-0".

VERTICAL SHAPE TRAFFIC RAILINGS

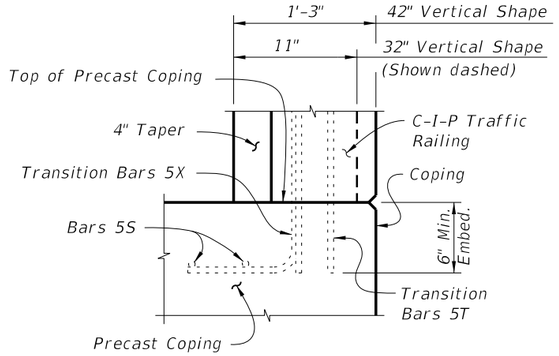

PARTIAL END VIEW OF TRAFFIC RAILING END TRANSITION FOR GUARDRAIL ATTACHMENT (Showing Bars 5S, Bars 5T and Bars 5X) (Precast Coping Shown, C-I-P Coping Similar)

NOTE: See Index No. 422 and Index No. 423, Railing End Detail for details.

ESTIMATED QUANTITIES FOR PRECAST COPING		
ITEM	UNIT	QUANTITY
Concrete (Precast Coping)	CY/LF	0.095
Concrete (C-I-P Raised Sidewalk)	CY/LF	0.232
Reinforcing Steel (Precast Coping) excluding Bars 5T, 5X and 5S (Typ.)	LB/LF	23.90
Reinforcing Steel (C-I-P Raised Sidewalk) (Typ.)	LB/LF	13.50
Additional Reinf. @ Expansion Joints (Dowels)	LB	32.04

The above concrete quantities are based on a Type D Concrete Curb (See Note 2).

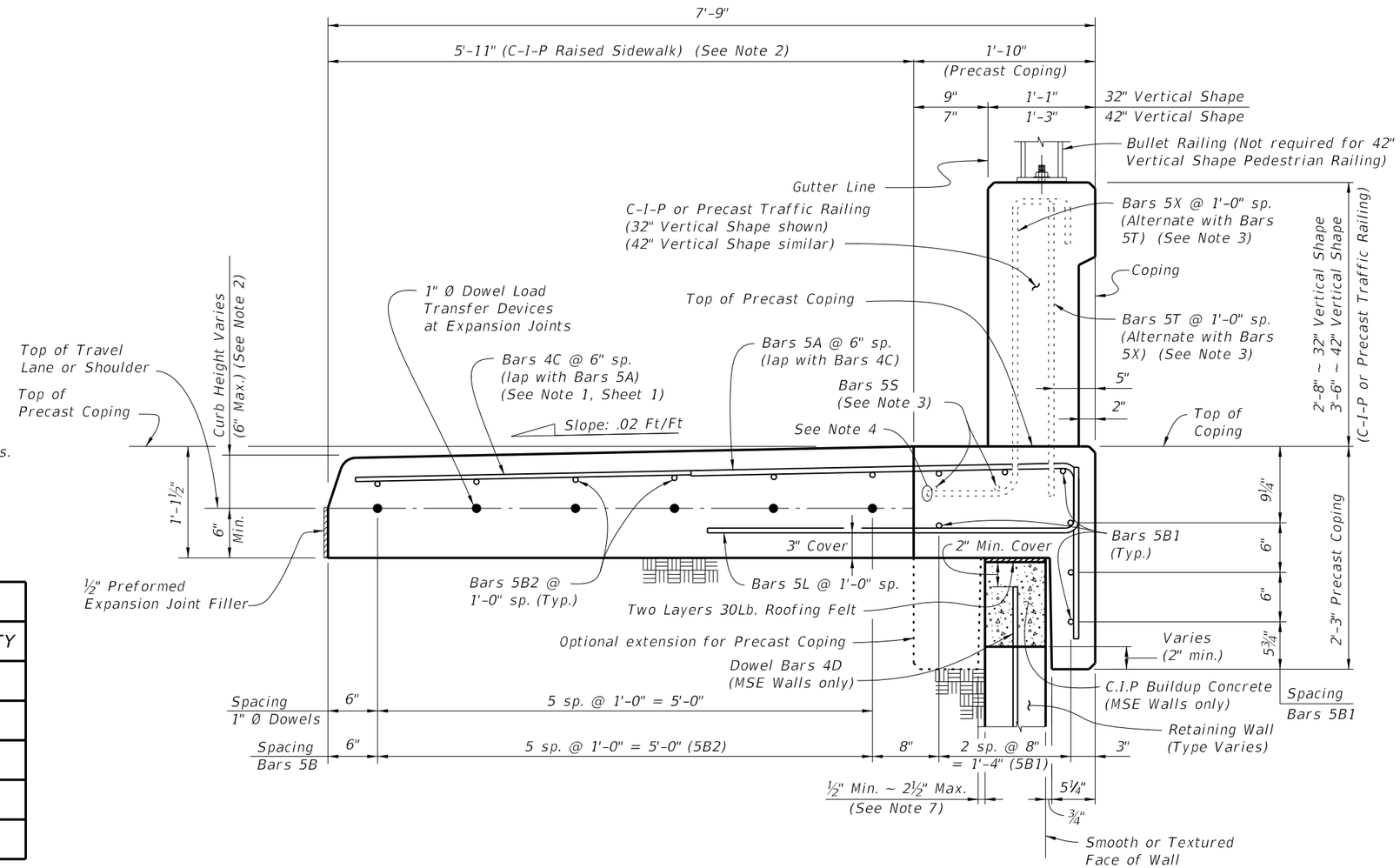

TYPICAL SECTION THRU PRECAST COPING WITH C-I-P RAISED SIDEWALK AND RETAINING WALL AT EXPANSION JOINTS

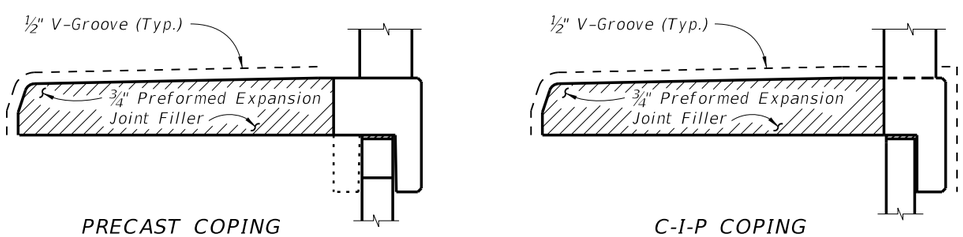

DETAIL "B"

(Showing Locations of ½" V-Grooves and ¾" Preformed Expansion Joint Filler)

NOTES:

1. Actual width varies depending on type of Retaining Wall used.
2. Match roadway curb shape (Type) and height. See Roadway Plans and Index No. 300. 5'-11" dimension is based on a 32" Vertical Shape Traffic Railing with a Type D curb adjacent to a 6'-0" wide sidewalk. Adjust this dimension as required for other curb types or transitions at Begin or End Retaining Wall.
3. See Index No. 422 and Index No. 423 for Bars 5S, 5T & 5X and Bullet Railing details. Adjust vertical dimension of Bars 5T and 5X, see Reinforcing Steel Note 5.
4. Trim end of Bars 5T and 5X to clear construction joint for 42" Vertical Shape Traffic Railing.
5. At the Contractor's option, mechanical couplers may be used to splice reinforcing. Complete details, including reinforcement lengths are required in the Shop Drawings. Mechanical couplers shall develop 125% of the bar yield strength.
6. Contractor to maintain stability of precast coping prior to junction slab completion.
7. When the air gap between the precast coping extension and retaining wall exceeds 2½", fill gap with full depth Expanded Polystyrene to provide a maximum 2½" air gap.

VERTICAL SHAPE TRAFFIC RAILINGS

REINFORCING STEEL BENDING DIAGRAMS - RAISED SIDEWALK

BILL OF REINFORCING STEEL

MARK	SIZE	LENGTH	
		PRECAST COPING/ RAILING	C-I-P COPING
A	5	5'-9"	9'-1"
B1	5	9'-6"/11'-6"	N/A
B2	5	AS REQD.	AS REQD.
C	4	5'-5"	N/A
F	5	5'-0"	5'-0"
L	5	4'-5"	4'-5"
1" Ø Dowel	Smooth Steel Bar	2'-0"	2'-0"

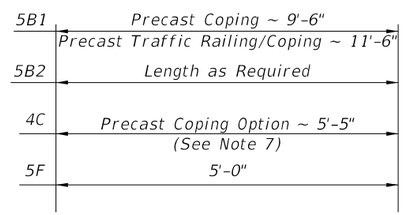

BARS 5B1, 5B2, 4C & 5F

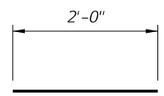

1" Ø DOWEL

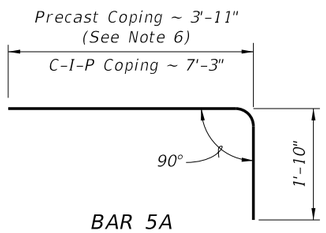

BAR 5A

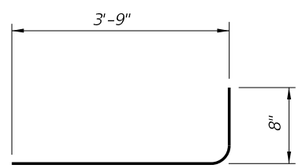

BAR 5L

REINFORCING STEEL NOTES:

1. All bar dimensions in the bending diagrams are out to out.
2. All reinforcing steel at expansion joints will have a 2" minimum cover.
3. Lap splices for Bars 5B will be a minimum of 2'-0".
4. Lap splice Bars 5A with Bars 4C. Lap splices will be a minimum of 2'-0".
5. See Index No. 422 and Index No. 423 for Bars 5S, 5T and 5X. Adjust vertical dimensions of Stirrup Bars 5T and 5X to 3'-0" for 32" Vertical Shape or 3'-10" for 42" Vertical Shape.
6. Dimension shown is for lap splice option. For mechanical coupler option, this dimension is 1'-8".
7. Dimension shown is for lap splice option. For mechanical coupler option, this dimension is 5'-8", and reinforcing size must be increased to #5 bars (Bars 5C).
8. The Contractor may use Welded Wire Reinforcement (WWR) when approved by the Engineer. WWR must consist of deformed wire meeting the requirements of Specification Section 931.

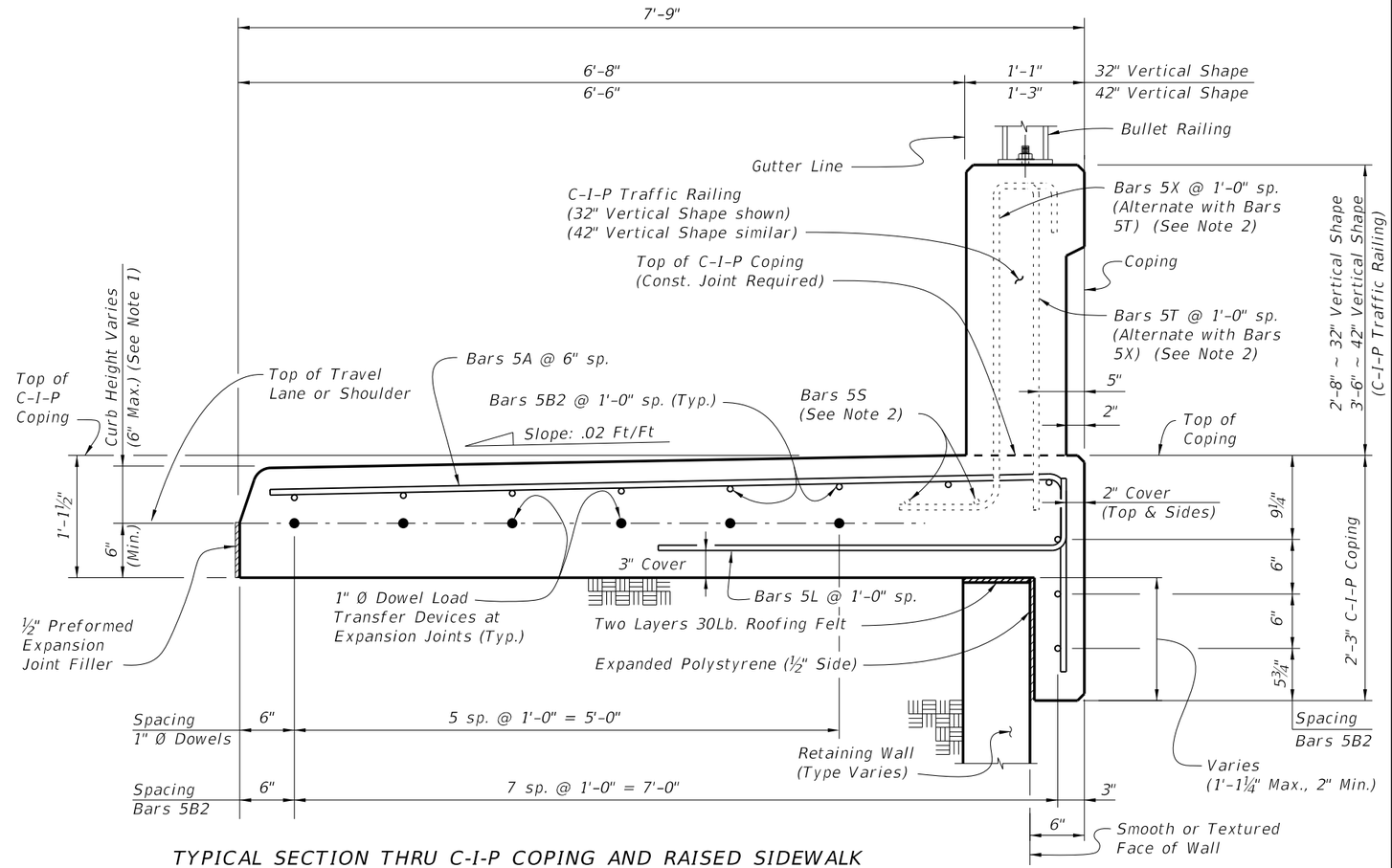

TYPICAL SECTION THRU C-I-P COPING AND RAISED SIDEWALK AND RETAINING WALL AT EXPANSION JOINTS

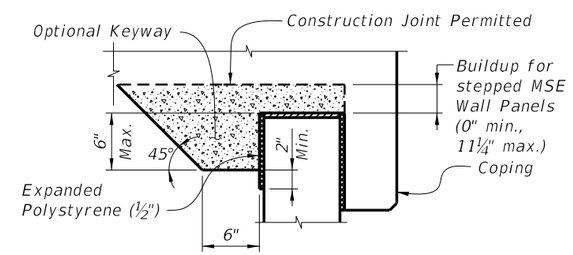

BUILDUP FOR STEPPED MSE WALL PANELS AND C-I-P COPING

ESTIMATED QUANTITIES FOR C-I-P COPING

ITEM	UNIT	QUANTITY
Concrete	CY/LF	0.326
Reinforcing Steel (Typical) excluding Bars 5T, 5X and 5S (Typ.)	LB/LF	35.03
Additional Reinf. @ Expansion Joints (Dowels)	LB	32.04

The above concrete quantities are based on a Type D Concrete Curb on a level Retaining Wall (See Note 1).

NOTES:

1. Match roadway curb shape (Type) and height. See Roadway Plans and Index No. 300. 6'-8" dimension is based on a 32" Vertical Shape Traffic Railing with a Type D curb adjacent to a 6'-0" wide sidewalk. Adjust this dimension as required for other curb types or transitions at Begin or End Retaining Wall.
2. See Index No. 422 and Index No. 423 for Bars 5S, 5T & 5X and Bullet Railing details. Adjust vertical dimension of Bars 5T and 5X, see Reinforcing Steel Note 5.

VERTICAL SHAPE TRAFFIC RAILINGS

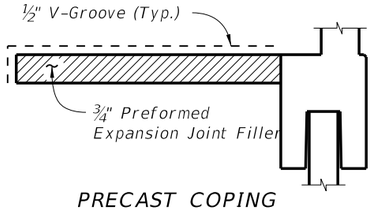

PRECAST COPING

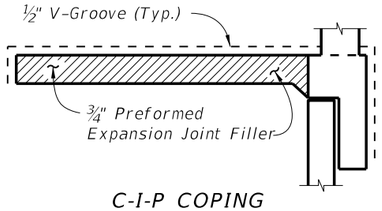

C-I-P COPING

DETAIL "C"

(Showing Locations of ½" V-Grooves and ¾" Preformed Expansion Joint Filler)

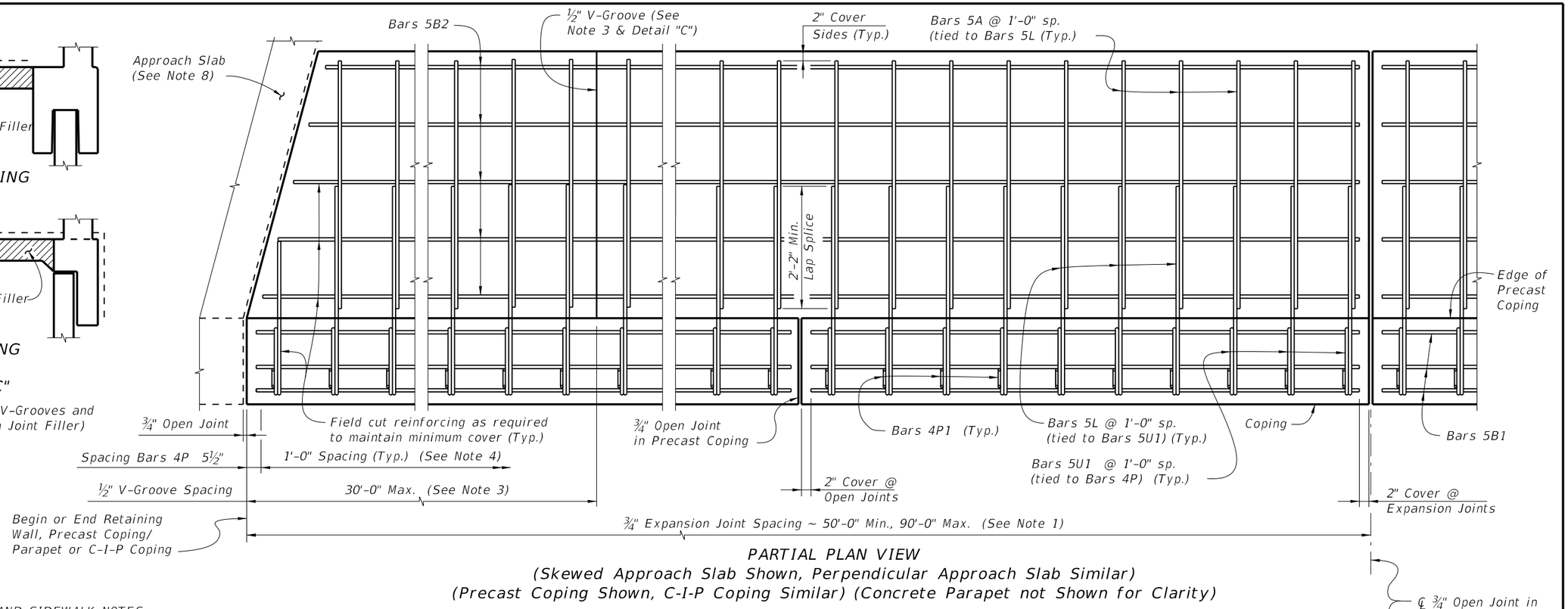

PARTIAL PLAN VIEW
(Skewed Approach Slab Shown, Perpendicular Approach Slab Similar)
(Precast Coping Shown, C-I-P Coping Similar) (Concrete Parapet not Shown for Clarity)

PRECAST COPING/PARAPET AND SIDEWALK NOTES:

1. Provide Class II concrete for slightly aggressive environments or Class IV for moderately or extremely aggressive environments.
2. Construct ¾" Expansion Joints in sidewalk and C-I-P coping plumb and perpendicular or radial to the Gutter Line. Provide at 90'-0" maximum intervals as shown.
3. Provide and install Preformed Expansion Joint Filler in accordance with Specification Section 932.
4. Construct ½" V-Grooves in sidewalk and C-I-P coping plumb and provide at 30'-0" maximum intervals as shown. Space V-Grooves equally between ¾" Expansion Joints and/or Begin or End Sidewalk. For C-I-P Coping only, V-Groove locations are to coincide with V-Groove locations in the Concrete Parapet.
5. Spacing shown is along the Gutter Line.
6. For Precast Coping only, Dowel Bars 4D are to extend 1'-0" above the top of retaining wall panel. Field cut as necessary to maintain 2" minimum cover to the top of the buildup concrete. See Wall Company Drawings for number and spacing of Dowel Bars 4D.
7. Work this Index with the following:
   Index No. 410 - Concrete Barrier Wall
8. For C-I-P Coping only, work this Index with the following:
   Index No. 820 - Pedestrian/Bicycle Railing.
9. Finish Sidewalks in accordance with Specifications Section 522.
10. The following Indexes contain details of the intersection of the retaining wall at approach slabs:
    Index No. 20900 - Approach Slabs (Flexible Pavement Approaches)
    Index No. 20910 - Approach Slabs (Rigid Pavement Approaches)

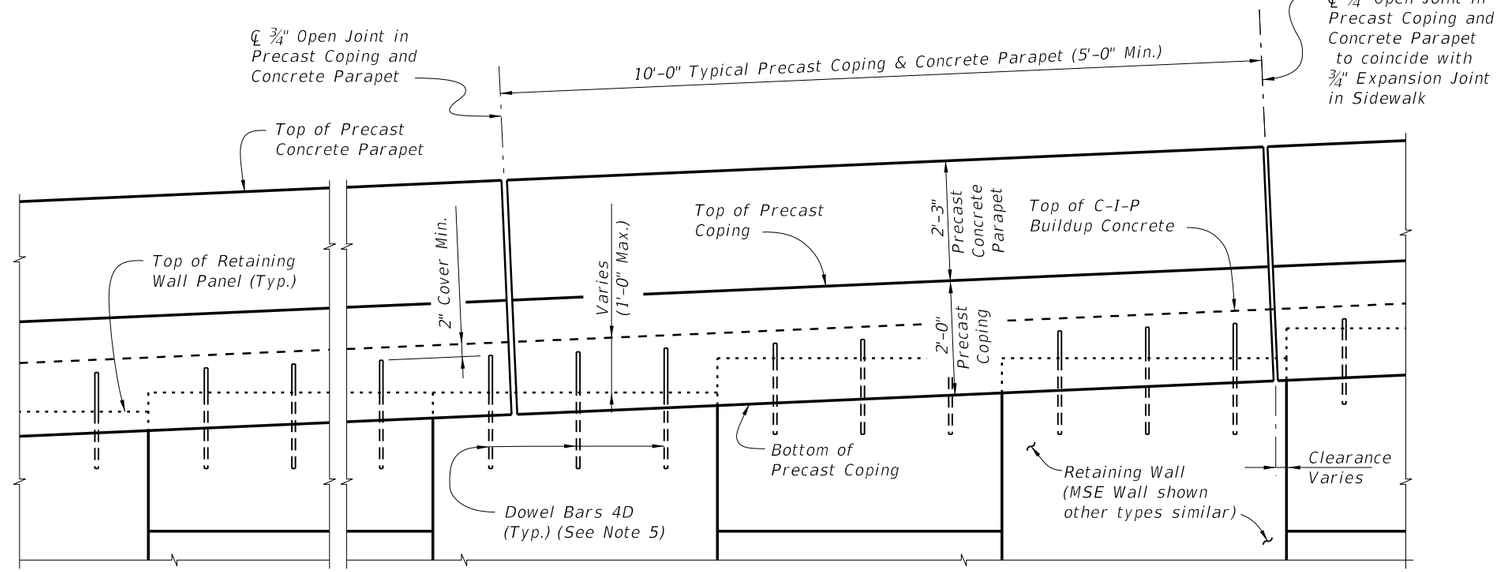

PARTIAL ELEVATION VIEW
(Precast Coping and Sidewalk Reinforcing not Shown for Clarity)
(Precast Coping Shown, C-I-P Coping Similar)

LAST REVISION	REVISION	DESCRIPTION:			INDEX NO.	SHEET NO.
01/01/11			FDOT 2014 DESIGN STANDARDS	WALL COPING/PARAPET WITH C-I-P SIDEWALK	6130	1 of 2

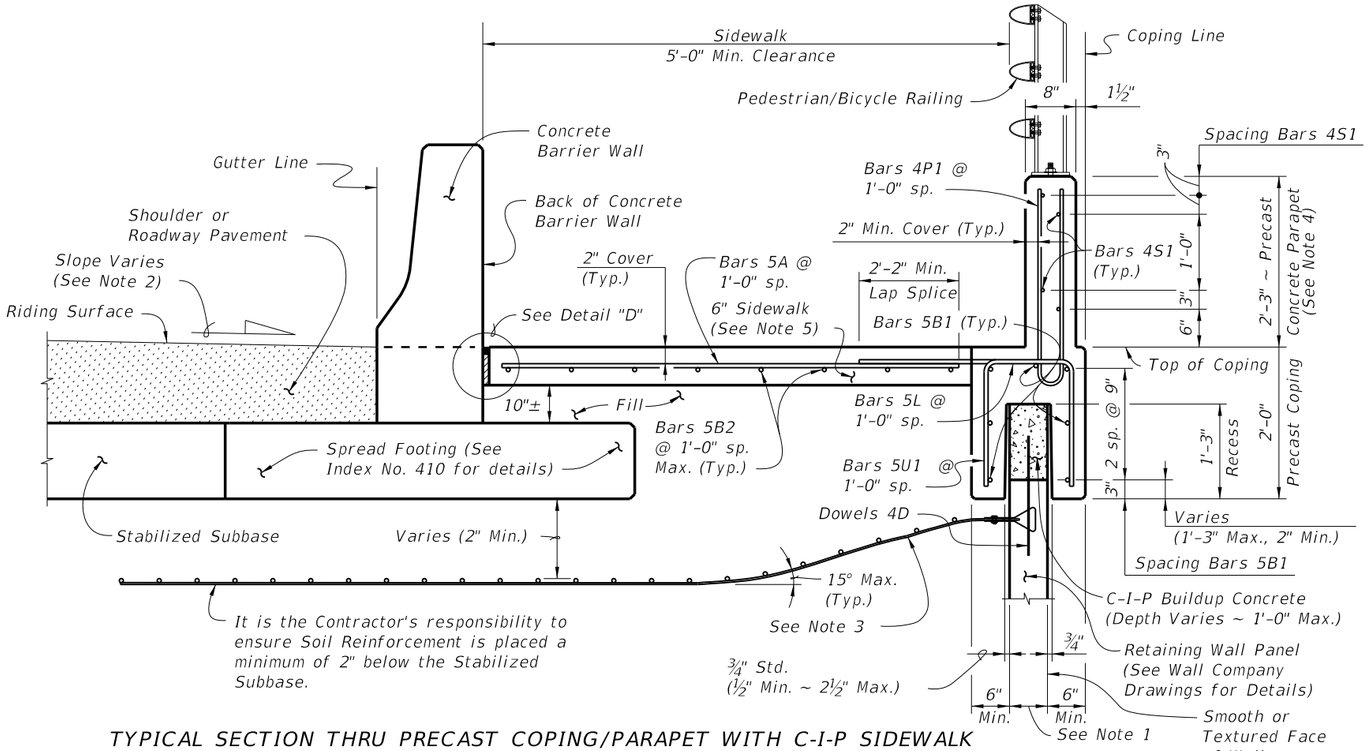

TYPICAL SECTION THRU PRECAST COPING/PARAPET WITH C-I-P SIDEWALK AND RETAINING WALL (MSE Wall Shown, other Wall Types Similar)

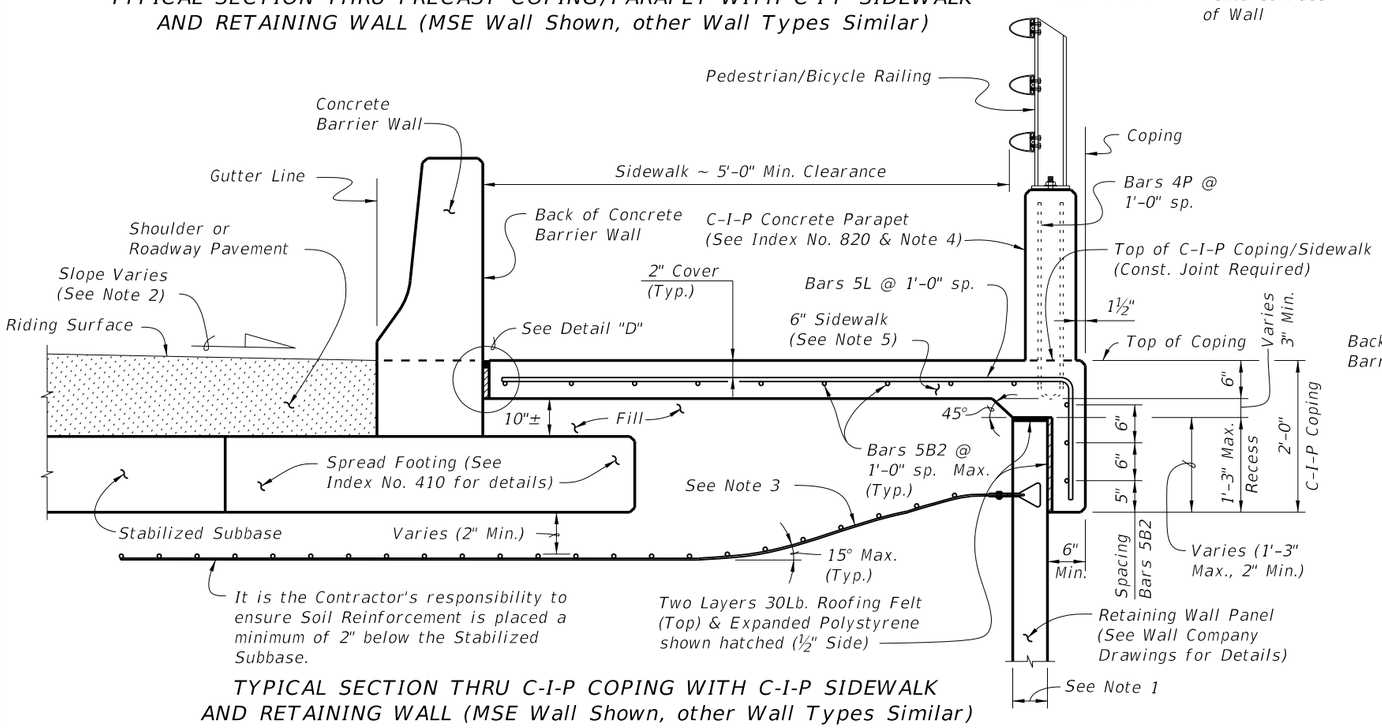

TYPICAL SECTION THRU C-I-P COPING WITH C-I-P SIDEWALK AND RETAINING WALL (MSE Wall Shown, other Wall Types Similar)

REINFORCING STEEL BENDING DIAGRAMS - COPING/PARAPET AND SIDEWALK

BILL OF REINFORCING STEEL

MARK	SIZE	LENGTH	
		PRECAST COPING	C-I-P COPING
A	5	VARIES	N/A
B1	5	9'-6"	N/A
B2	5	AS REQD.	AS REQD.
D	4	2'-0"	N/A
L	5	VARIES	VARIES
P1	4	5'-5"	N/A
S1	4	9'-6"	N/A
U1	5	VARIES	N/A

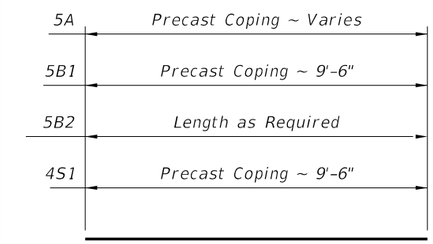

BARS 5A, 5B1, 5B2 & 4S1

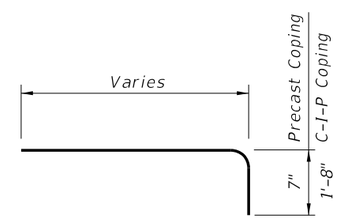

BAR 5L

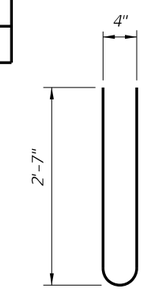

BAR 4P1

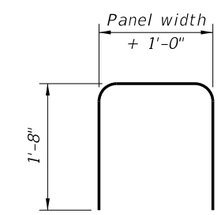

BAR 5U1

REINFORCING STEEL NOTES:

1. All bar dimensions in the bending diagrams are out to out.
2. All reinforcing steel at expansion joints will have a 2" minimum cover.
3. Lap splices for Bars 5B2 will be a minimum of 2'-2".
4. For Precast Coping only, lap splice Bars 5L with Bars 5A. Lap splices will be a minimum of 2'-2".
5. For C-I-P only, see Index No. 820 for Bars 4P and 4S.
6. The Contractor may use Welded Wire Reinforcement (WWR) when approved by the Engineer. WWR must consist of Deformed wire meeting the requirements of Specification Section 931.

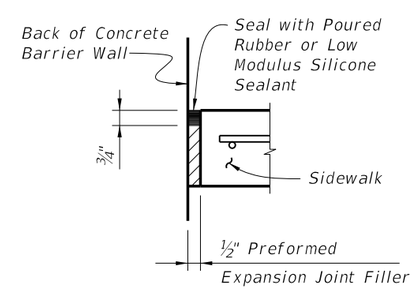

DETAIL "D"

PRECAST COPING/PARAPET AND SIDEWALK NOTES:

1. Actual width varies depending on type of Retaining Wall used.
2. Match Cross Slope of Travel Lane or Shoulder.
3. Gradually deflect/displace Soil Reinforcement downward as required. Soil Reinforcement is shown deflected downward for illustrative purposes only and is not to scale. See Wall Company Drawings for details.
4. Concrete Parapet shown, Concrete Pedestrian/Bicycle Railing (Index No. 825 & 826) similar. Complete details and dimensions of Concrete Pedestrian/Bicycle Railing are required in the Shop Drawings.
5. Match cross slope of connecting sidewalk or as shown in the Wall Control Drawings.

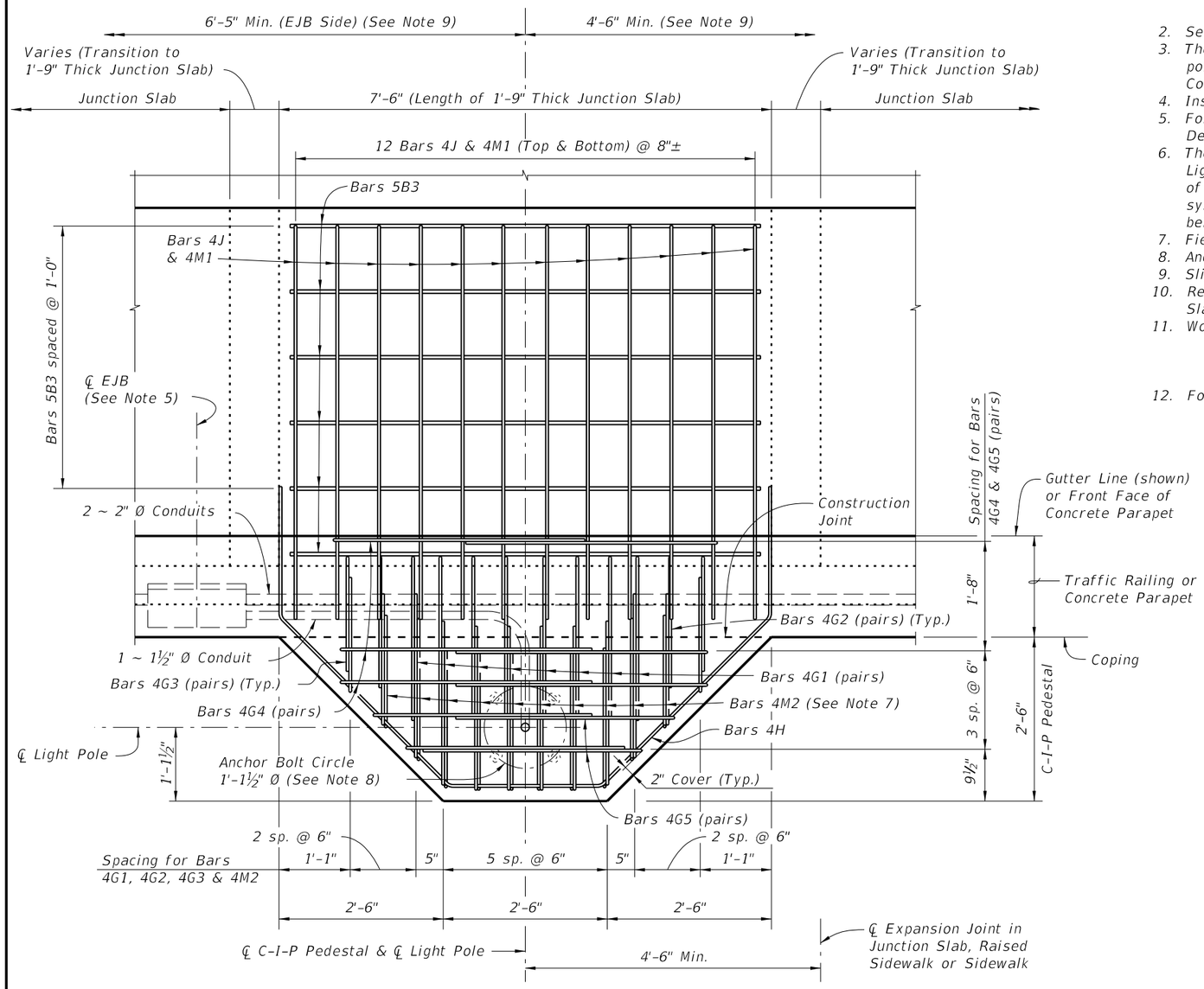

PLAN VIEW
(Junction Slab reinforcing not shown for clarity)
(Junction Slab Shown, Raised Sidewalk or Sidewalk Similar)

LIGHT PEDESTAL NOTES:

1. The pedestal and junction slab are designed to resist the following working loads from the light pole applied at the top of the Pedestal:

Axial Deadload	=	1.560 kip
Wind load Moment about Transverse Axis (*)	=	40.60 kip-ft
Wind load Moment about Longitudinal Axis (*)	=	28.30 kip-ft
Dead load Moment about Longitudinal Axis (*)	=	1.690 kip-ft
Maximum Shear	=	1.380 kip
Torsion about Pole Axis	=	3.560 kip-ft

(*) - Axis refers to Bridge Axis.

2. See Index No. 21200 for anchor bolt design and notes.
3. The Contractor is responsible for ensuring the anchor bolt design is compatible with the light pole base plate. Modifications to the anchor bolt design must be signed and sealed by the Contractor's Specialty Engineer and submitted to the Engineer for approval prior to construction.
4. Install Anchor Bolts plumb.
5. For conduit, EJB and expansion/deflection fitting details, see Utility Conduit Detail Drawings.
6. The cost of anchor bolts, nuts, washers and anchor plates will be included in the Bid Price for Light Poles. Include the cost of all labor, concrete and reinforcing steel required for construction of the pedestals, EJB and miscellaneous hardware required for the completion of the electrical system in the Bid Price for either the Traffic Railing or Concrete Parapet that the pedestal is behind.
7. Field Cut Bars 4M2 as required to maintain clearance.
8. Anchor Bolt pattern orientation will be as shown.
9. Slip Forming Method of construction requires the Engineer's approval within the limits shown.
10. Reinforcing shown for light pole pedestals is in addition to typical reinforcing for C-I-P Junction Slabs and Raised Sidewalks.
11. Work this Index with the following as appropriate:
    - Index No. 6110
    - Index No. 6120
    - Index No. 6130
12. For Estimated Quantities, see Sheet No. 3.

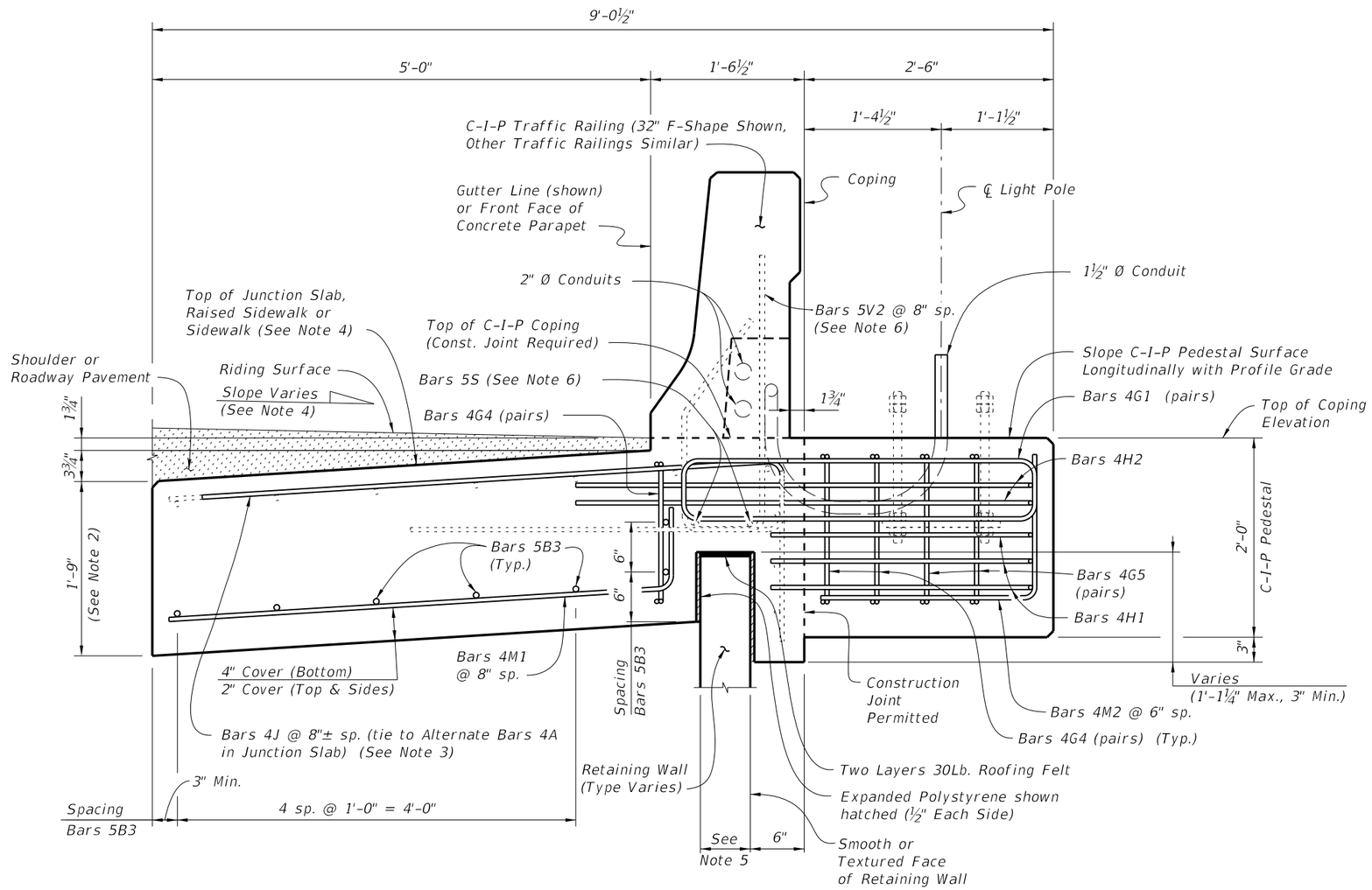

TYPICAL SECTION AT LIGHT POLE PEDESTAL
(Traffic Railing Shown, Concrete Parapet Similar)
(Junction Slab Shown, Raised Sidewalk or Sidewalk Similar)

NOTES:

1. Provide Concrete Class to match adjacent coping.
2. For junction slabs, increase the 1'-0" depth dimension to 1'-9". For sidewalks see Index No. 6130 for C-I-P Coping, but increase 6" depth dimension to 1'-6". The minimum length of the Junction Slabs, Raised sidewalks and Sidewalks is 30'-0", measured along the Gutter Line.
3. Bars 4J are only required when pedestals are behind a Traffic Railing.
4. Match the slope of the adjoining junction slab and shoulder or roadway pavement, raised sidewalk or sidewalk.
5. Actual width varies depending on type of Retaining Wall used.
6. See Index No. 6110 for Bars 5V2 and 5S.

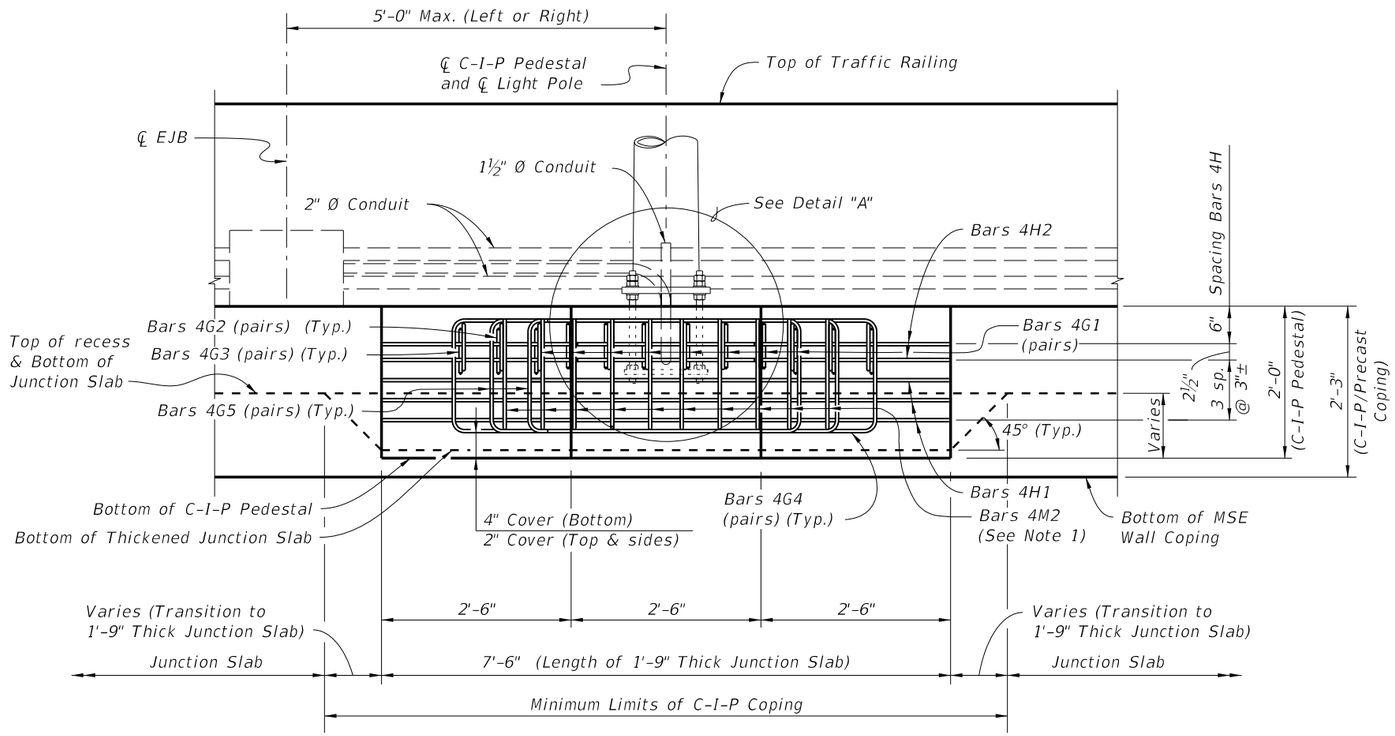

ELEVATION VIEW
(Junction Slab Reinforcing & Bars 4J not Shown for Clarity)
(Traffic Railing Shown, Concrete Parapet Similar)
(Junction Slab Shown, Raised Sidewalk or Sidewalk Similar)

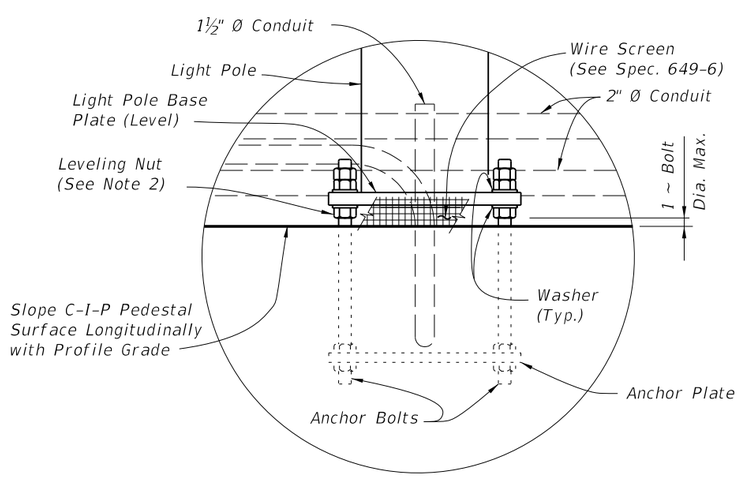

DETAIL "A"

NOTES:
1. Field Cut Bars 4M2 as required to maintain minimum cover.
2. Maximum clearance between leveling nut and top of pedestal will not exceed anchor bolt diameter.

ESTIMATED QUANTITIES		
ITEM	UNIT	QUANTITY
Concrete (Pedestal)	CY	0.926
Concrete (Thickened Junction Slab)	CY	1.222
Reinforcing Steel	LB	349

(The quantities above are for one C-I-P Light Pole Pedestal. The concrete quantity for the thickened junction slab is based on a 6" increase in thickness and a 5" wide retaining wall panel. Adjust thickened concrete quantity as required for raised sidewalks and sidewalks.)

REINFORCING STEEL BENDING DIAGRAMS - LIGHT POLE PEDESTAL

BILL OF REINFORCING STEEL			
MARK	SIZE	NO. REQD.	LENGTH
B3	5	7	7'-2"
G1	4	16	5'-8"
G2	4	4	4'-8"
G3	4	4	4'-2"
G4	4	6	8'-10"
G5	4	4	7'-4"
H1	4	3	9'-8"
H2	4	2	13'-8"
J	4	12	6'-0"
M1	4	12	5'-10"
M2	4	10	3'-8"

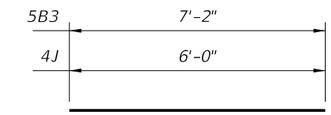

BARS 5B3 & 4J

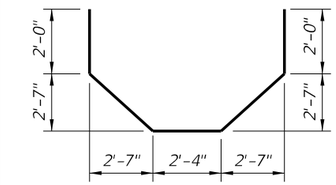

BAR 4H2

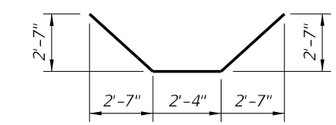

BAR 4H1

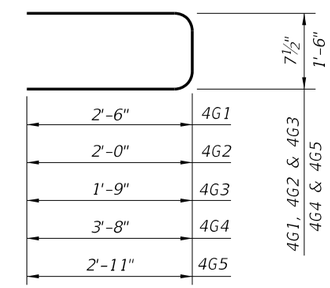

BARS 4G1, 4G2, 4G3, 4G4 & 4G5

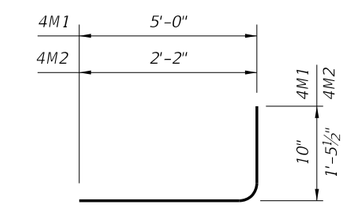

BAR 4M1 & 4M2

REINFORCING STEEL NOTES:
1. All bar dimensions in the bending diagrams are out to out.
2. Lap splices for Bars 4G1, 4G2 & 4G3 will be a minimum of 1'-4". Lap splices for Bars 4G4 & 4G5 will be a minimum of 1'-8".
3. The Contractor may use Welded Wire Reinforcement (WWR) when approved by the Engineer. WWR must consist of deformed wire meeting the requirements of Specification Section 931.

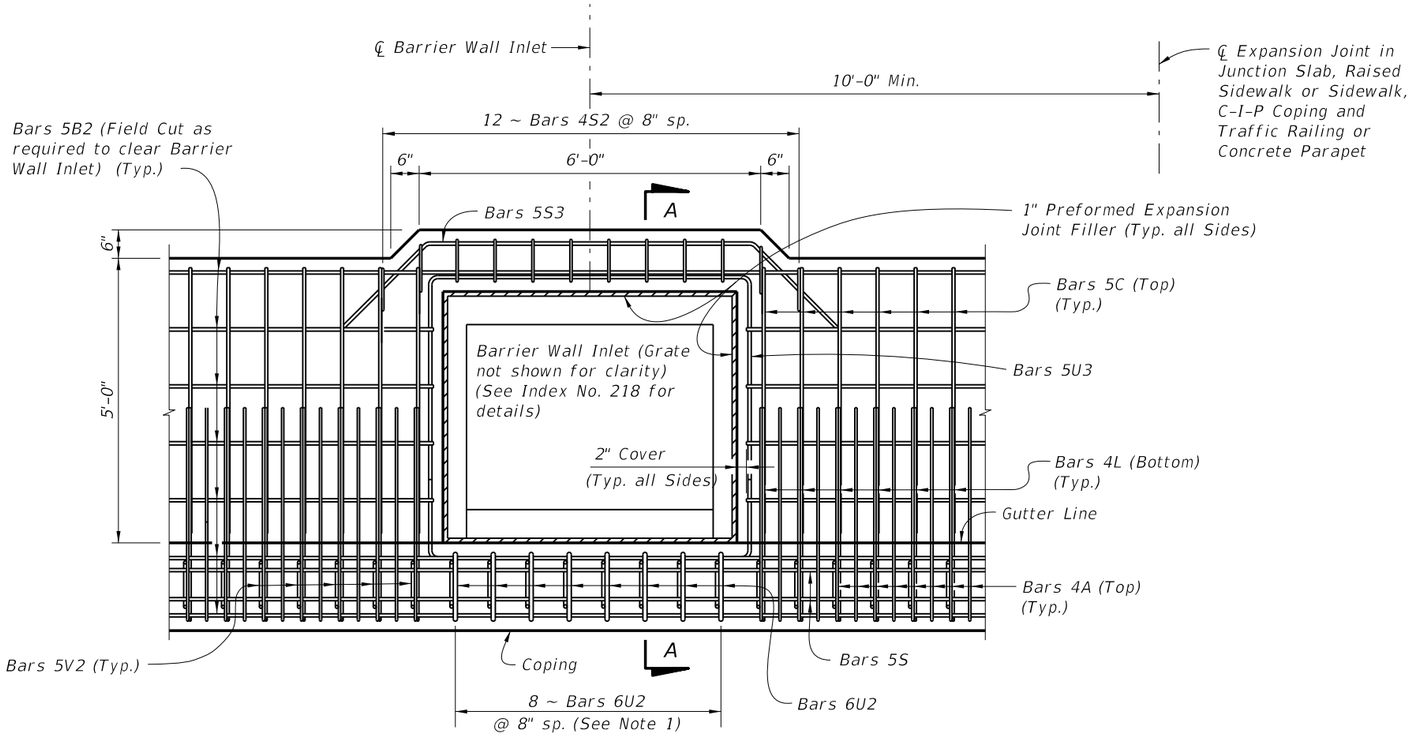

PLAN VIEW
(Junction Slab Shown, Raised Sidewalk Similar)

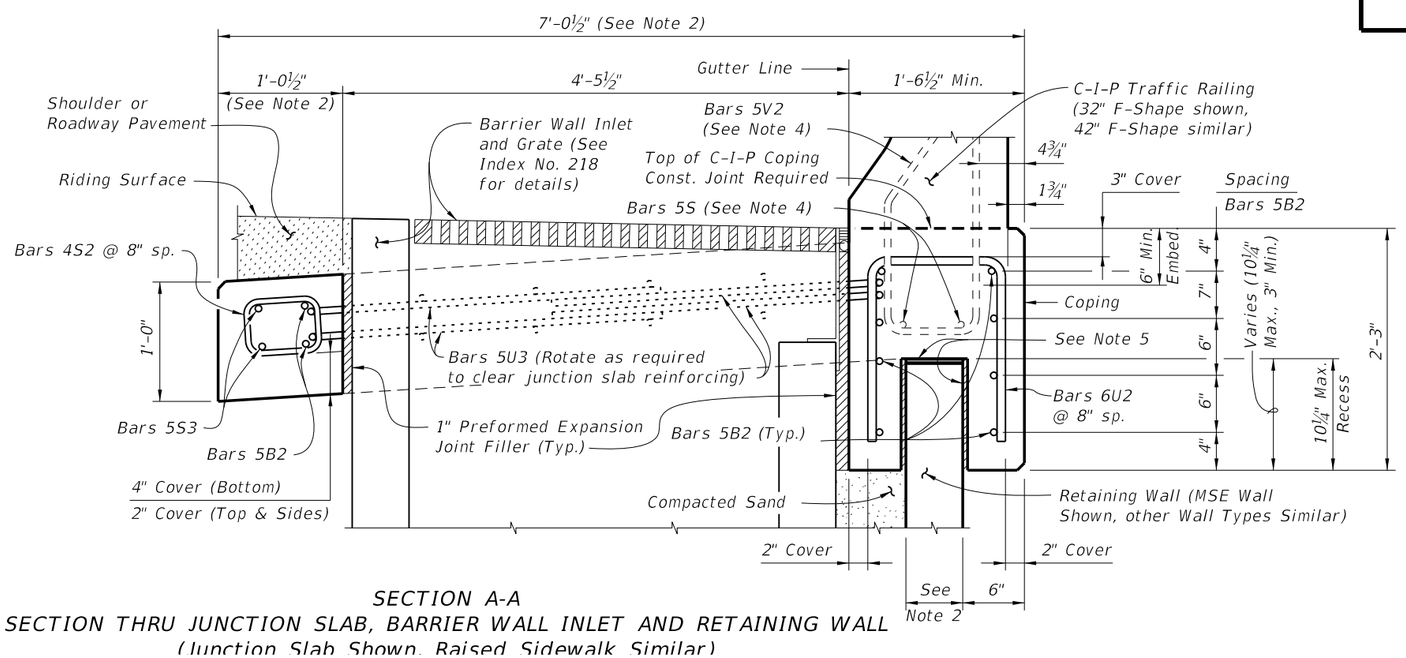

SECTION A-A
SECTION THRU JUNCTION SLAB, BARRIER WALL INLET AND RETAINING WALL
(Junction Slab Shown, Raised Sidewalk Similar)

REINFORCING STEEL BENDING DIAGRAMS - DRAINAGE

BILL OF REINFORCING STEEL

MARK	REQD.	SIZE	LENGTH
S2	12	4	3'-1"
S3	2	5	10'-0"
U2	8	6	VARIES
U3	4	5	12'-10"

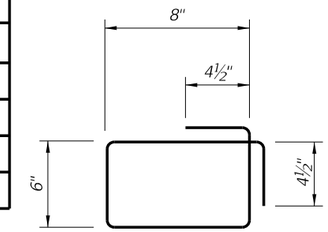

STIRRUP BAR 4S2

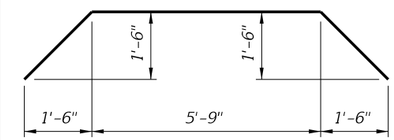

BAR 5S3

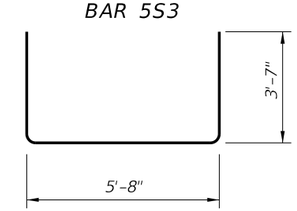

BAR 5U3

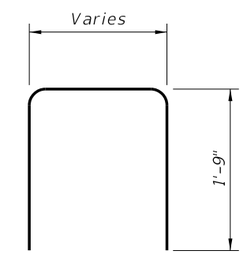

BAR 6U2

REINFORCING STEEL NOTES:
1. All bar dimensions in the bending diagrams are out to out.
2. All reinforcing steel at open joints will have a 2" minimum cover.
3. See Index Nos. 6110, 6120 & 6130 for Bars 4A (or 5A), 5B, 5C and 4L (or 5L).
4. The Contractor may use Welded Wire Reinforcement (WWR) when approved by the Engineer. WWR must consist of Deformed wire meeting the requirements of Specification Section 931.

NOTES:

1. Spacing shown is along the Gutter Line. Spacing shown is for C-I-P Junction Slab. For C-I-P Raised Sidewalks or Sidewalks, match bar spacing and size shown in Typical Sections (i.e., 11 ~ Bars 5U2 and 15 ~ Bars 4S2 @ 6" spacing for Raised Sidewalks).
2. Dimensions shown are for junction slab. Increase width as required for C-I-P Raised Sidewalk and Sidewalks.
3. Actual location & width vary depending on type of Retaining Wall used.
4. See Index No. 6110 for Bars 5V2 and 5S.
5. Two Layers 30Lb. Roofing Felt (Top) & Expanded Polystyrene shown hatched (½" Each Side).
6. Locate ℄ Barrier Wall Inlet a minimum of 10'-0" away from ℄ Expansion Joints in Junctions Slab, Raised Sidewalk or Sidewalk, C-I-P Coping and Traffic Railing or Concrete Parapet.
7. Work this Index with the following as appropriate:
   Index No. 6110
   Index No. 6120
   Index No. 6130