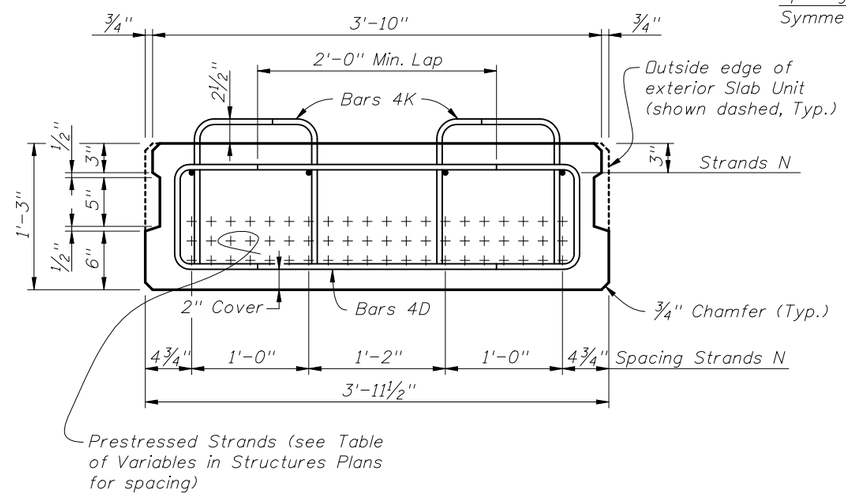

TYPICAL SECTION

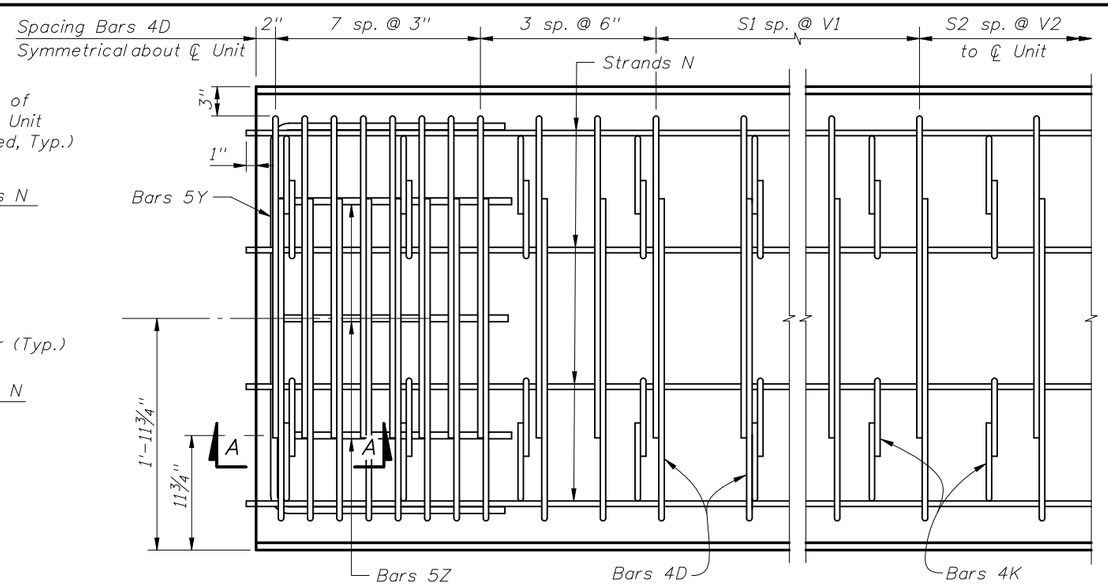

PLAN AT END OF PRESTRESSED SLAB UNIT

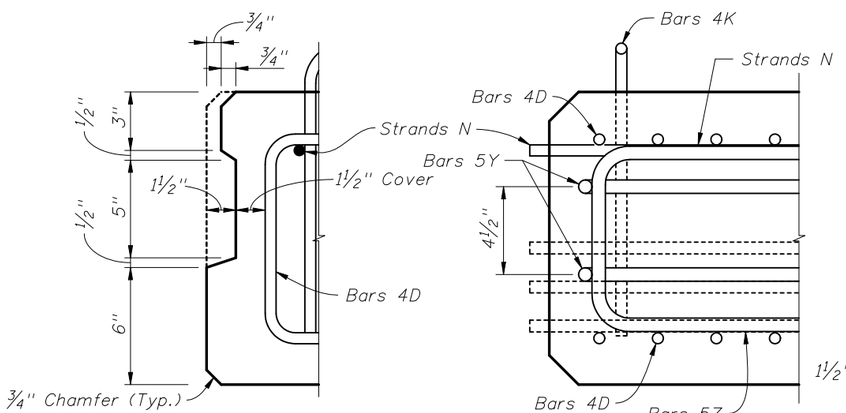

KEYWAY DETAIL

SECTION A-A

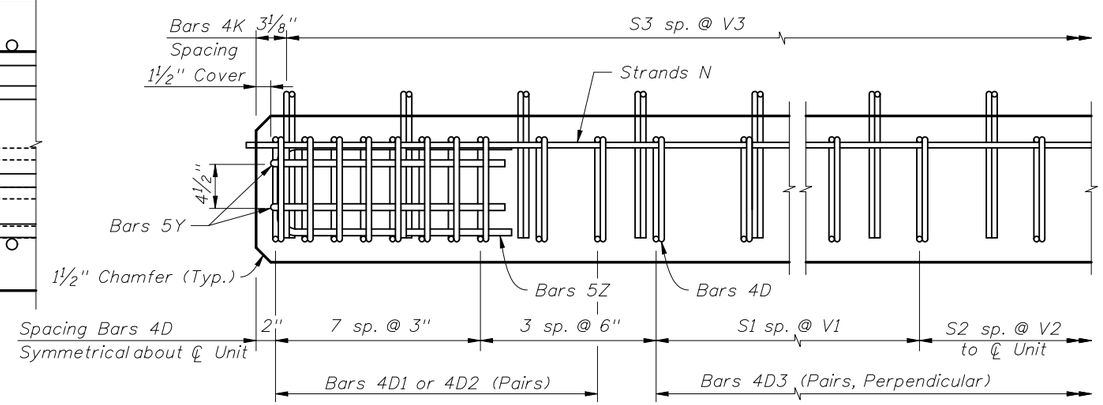

ELEVATION AT END OF PRESTRESSED SLAB UNIT

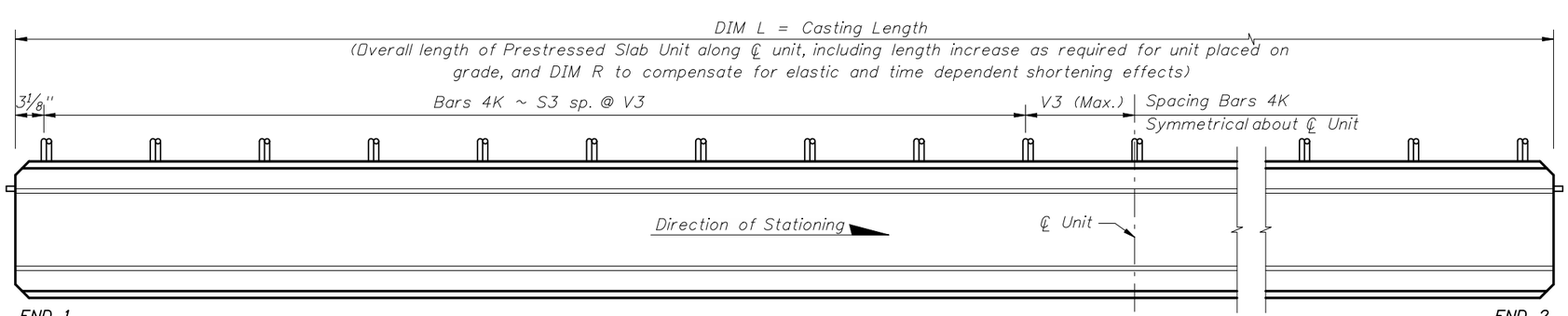

ELEVATION

BILL OF REINFORCING STEEL FOR ONE UNIT ONLY

MARK	NOTE NUMBERS	SIZE	NUMBER REQUIRED	LENGTH (NOTE 1)
D1	4, 5, 10	4	20 (End 1)*	Varies
D2	4, 5, 10	4	20 (End 2)*	Varies
D3	5	4	See Table	6'-5"
K	4, 5	4	See Table	1'-11"
N	2, 8	3/8" Φ Strands	4	Dim. L + 2"
Y1	4, 10	5	2 (End 1)	Varies
Y2	4, 10	5	2 (End 2)	Varies
Z	–	5	6	4'-10"

BENDING DIAGRAMS (See Note 1)

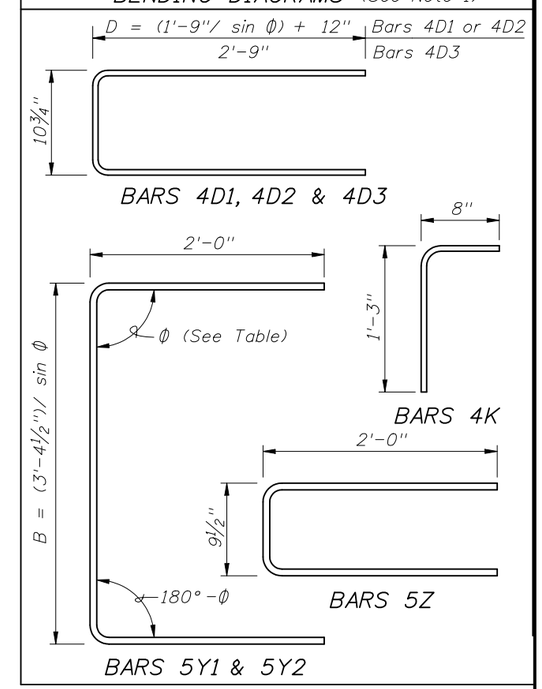

NOTES:

Work this Index with Index No. 20350. and Prestressed Standard Slab Units - Table of Variables in Structures Plans.

For referenced notes, see Index No. 20350.

For Dimensions B, D, L, R, V1 thru V3 and number of spaces S1 thru S3, see Prestressed Standard Slab Units - Table of Variables in Structures Plans.

* See Note 4 for additional Bars 4D1 or 4D2 for skewed units.

REVISIONS

DATE	BY	DESCRIPTION	DATE	BY	DESCRIPTION
01/01/09	TJB	New Design Standard			
07/01/09	RMS	Added Bars 4D3 & 5Y2; changed location of Bars 4D1 to End 1 & 4D2 to End 2.			

STATE OF FLORIDA DEPARTMENT OF TRANSPORTATION

2008 Interim Design Standard

15"x48" PRESTRESSED SLAB UNIT - STANDARD DETAILS

Interim Date 07/01/09

Sheet No. 1 of 1

Index No. 20364