ANCHOR BOLT TABLE							
CASE	STRUCTURE TYPE	DIMENSIONS			ANCHOR LENGTH		ANCHOR SIZE
		"A" Edge Dist.	"B" Edge Dist.	"C" Embedment	C.I.P. Hex Head Bolt	Adhesive Anchor	
I	Unreinforced Concrete	6"	1'-2"	9"	10½"	11"	¾" Φ
IIa	Reinforced Concrete	4"	4"	9"	10½"	11"	¾" Φ
IIb	Gravity Wall Index No. 520	4½"	3½" @ top	1'-0"	1'-11½"	1'-2"	¾" Φ

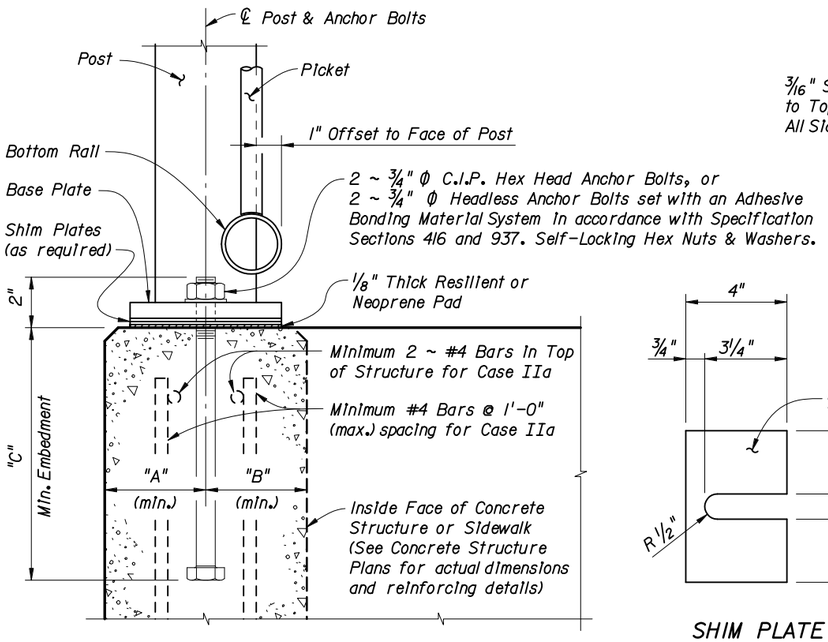

DETAIL "A"
(Cast-In-Place Anchor Bolts Shown, Adhesive Anchors Similar)

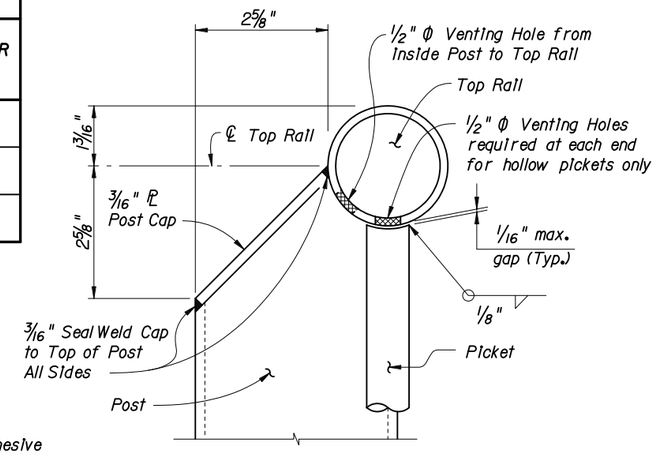

DETAIL "B"
(Top of Picket Connection Shown, Bottom Connection Similar)

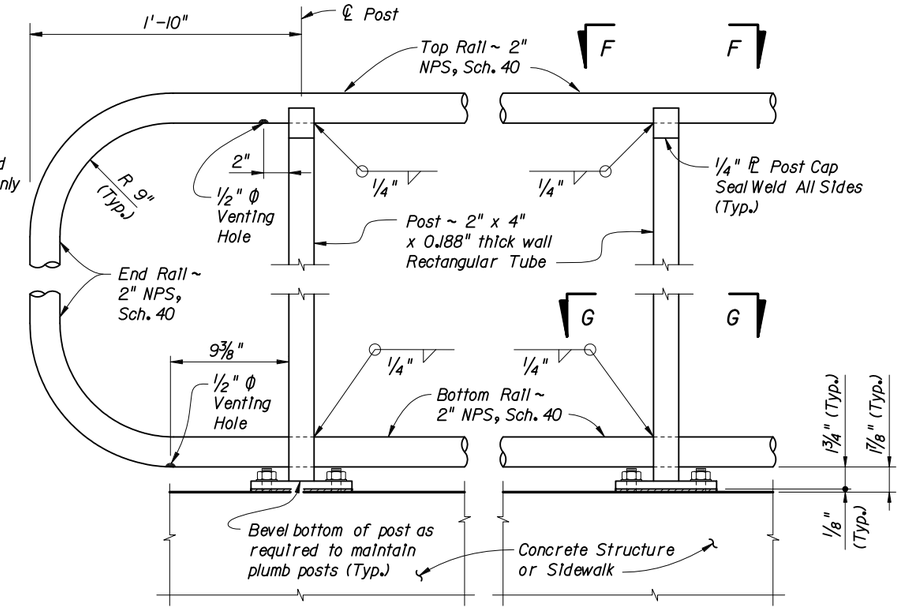

DETAIL "C" - RAIL CONNECTIONS
(Showing Outside Face of Railing and Structure, Pickets Not Shown for Clarity)

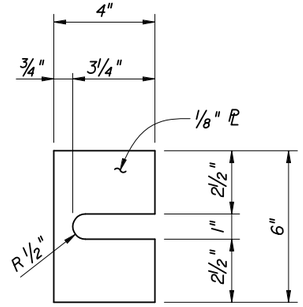

SHIM PLATE DETAIL

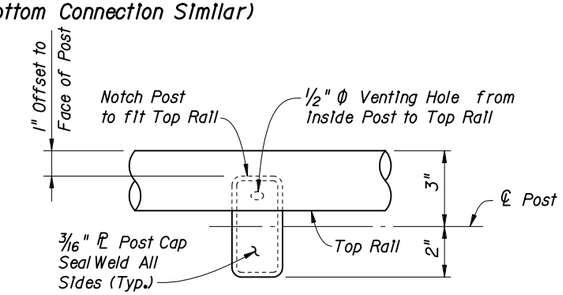

VIEW F-F
TOP RAIL CONNECTION
(Base Plate Not Shown for Clarity)

RAILING MEMBER DIMENSIONS			
MEMBER	DESIGNATION	OUTSIDE DIMENSION	WALL THICKNESS
Posts	2" x 4" Rectangular Tube	2.00" x 4.00"	0.188"
Rails	2" NPS (Sch. 40)	2.375"	0.154"
Joint/Splice Sleeves	1½" NPS (Sch. 40)	1.900"	0.145"
Pickets	½" NPS (Sch. 40)	0.840"	0.109"
	¾" Φ Round Bar	0.750"	N/A

* At the Contractor's option 2 ~ ¼" Φ x ¾" Pan Head Stainless Steel (Type 316) Set Screws at 2" spacing along outside face of railing may be substituted for the ¾" Φ plug weld.

** Embedded length may be 4" for plug welded connection, to maintain venting of ends of pickets during galvanizing.

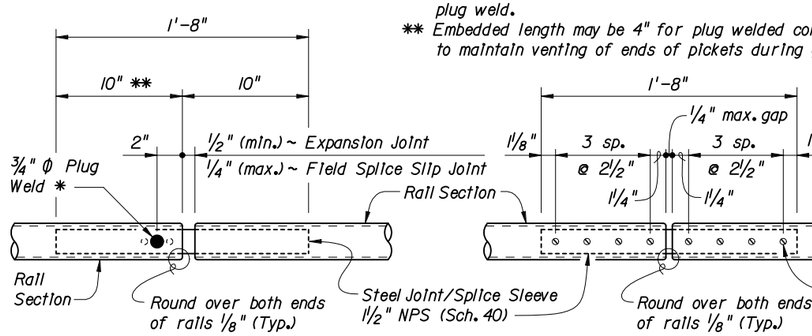

DETAIL "D" - EXPANSION JOINT
(FIELD SPLICE SLIP JOINT SIMILAR)

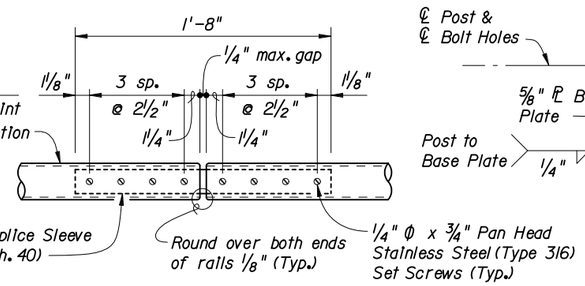

DETAIL "E" - CONTINUITY
FIELD SPLICE

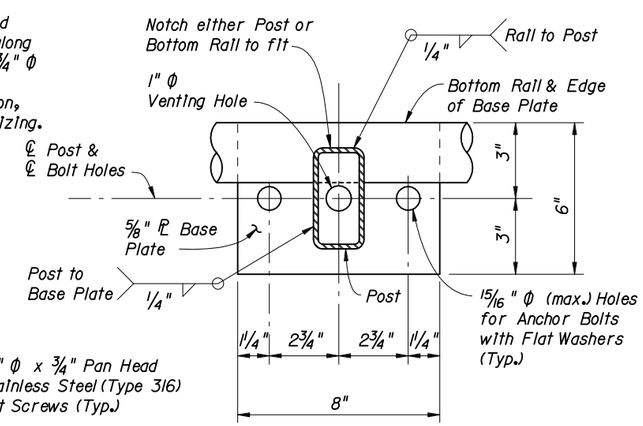

SECTION G-G
BASE PLATE AND BOTTOM RAIL CONNECTION

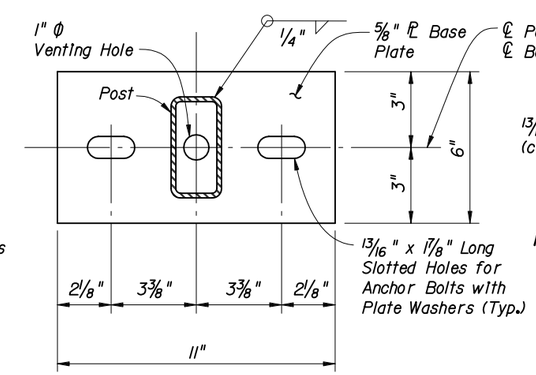

ALTERNATE SLOTTED BASE
PLATE DETAIL

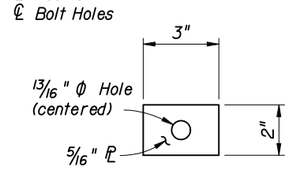

PLATE WASHER DETAIL

CROSS REFERENCE:
For locations of Details "A", "B", "C", "D" and "E", see Sheet 1 of 2

REVISIONS

DATE	BY	DESCRIPTION	DATE	BY	DESCRIPTION
01/01/06	SJN	Corrected C.I.P. Anchor Bolt diameter in Detail "A" and changed venting hole to 1" Ø.			

STATE OF FLORIDA DEPARTMENT OF TRANSPORTATION

2006 Interim Design Standard

STEEL PEDESTRIAN/BICYCLE PICKET RAILING

Interim Date 01/01/06

Sheet No. 2 of 2

Index No. 850