FINANCIAL PROJECT ID	STATE PROJ. NO.	SHEET NO.

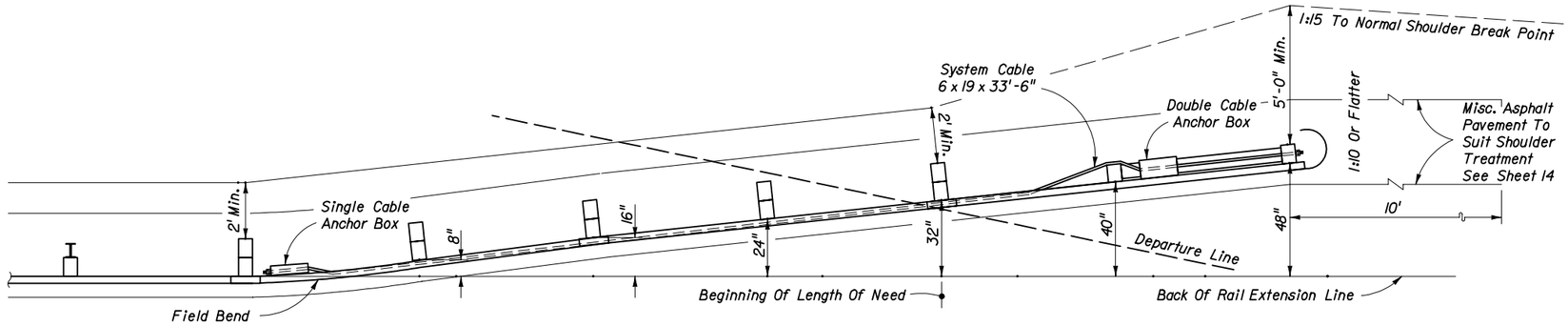

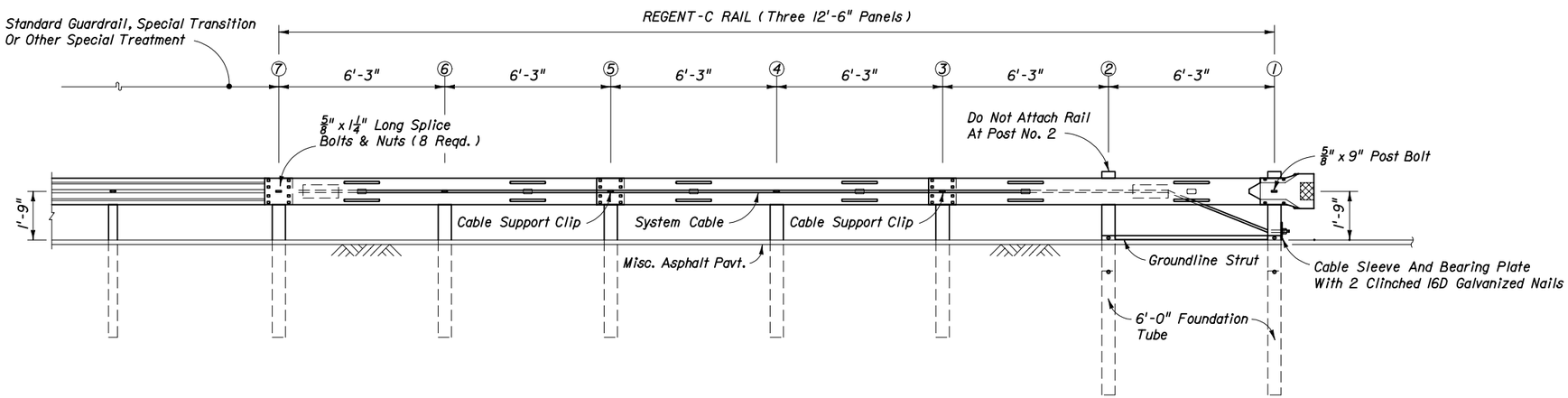

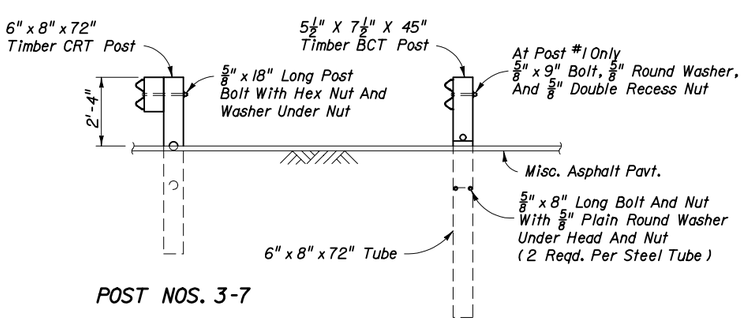

POST NOS. 3-7

POST NOS. 1 & 2

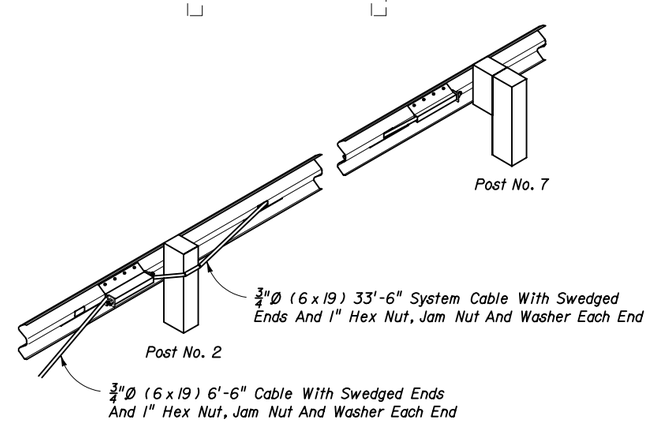

PICTORIAL BACK VIEW

REGENT-C NOTES

1. The guardrail end anchorage system represented on this standard drawing is a proprietary design by Energy Absorption Systems, Inc. and marketed under the trade name REGENT-C. Any infringement on the rights of the designer shall be the sole responsibility of the user.

2. This standard drawing is produced by the Florida Department Of Transportation solely for use by the Department and its assignees. This standard drawing provides the general graphics and information necessary to field identify component parts of the REGENT-C and their incorporation into a whole system.

3. This standard drawing is sufficient for plan details for the REGENT-C when installed in connection with shoulder guardrail and precludes the requirement for shop drawing submittals unless the plans otherwise call for such submittals. The REGENT-C shall be assembled in accordance with the manufacturer's detailed drawings, procedures and specifications.

4. The REGENT-C is a seven post system assisted by a full length cable, intended for use as an approach end anchorage for shoulder guardrail. The effective length of the REGENT-C is 37.5' including three 12.5' special W-Beam panels outside of any other standard guardrail, guardrail transitions or other special treatments. The alignment of the REGENT-C is a straight flare with an upstream offset of 4'.

5. The REGENT-C can not be used in medians where horizontal clearance requires the use of a backrail.

6. Posts at location Nos. 1 and 2 must be timber breakaway posts with special length steel foundation tubes without soil plates. The posts at location Nos. 3, 4, 5, 6, and 7 shall be CRT timber posts.

7. See Index No. 400 for guardrail applications, standard hardware, accessories and for galvanizing requirements of metallic components.

8. If the plans call for the REGENT-C at a specific location, substitution with other end anchorage assemblies will not be permitted unless approved by the Engineer. If the plans call for end anchorage assembly 'flared' at a specific location, the contractor has the option to construct any FDOT approved flared assembly. Where a flared end anchorage is called for in the plans, any approved substitution with a parallel end anchorage will not be eligible for VECP consideration.

9. The REGENT-C shall be paid for under the contract unit price for Guardrail, End Anchorage Assembly (Flared), EA and shall be full compensation for furnishing and installing all components in accordance with the plans; the manufacturer's detail drawings, procedures and specifications and this Index.

DESIGN NOTES

1. The REGENT-C is suitable for all design speeds.

INTERIM STANDARD IN ENGLISH UNITS APPLICABLE TO DESIGN STANDARDS BOOKLET PUBLISHED IN ENGLISH UNITS.

END ANCHORAGE ASSEMBLY TYPE REGENT-C

Date: 08-21-03

STATE OF FLORIDA DEPARTMENT OF TRANSPORTATION

GUARDRAIL

INTERIM STANDARD

THIS INDEX IS A SUPPLEMENT TO INDEX NO. 400 OF THE DESIGN STANDARDS, BOOKLET DATED JANUARY 2004.

APPROVED BY
Roadway Design Engineer

REVISION NO.	SHEET NO.	INDEX NO.
	1 of 1	0400