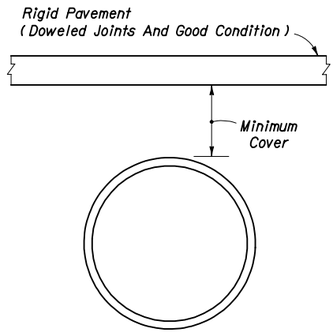

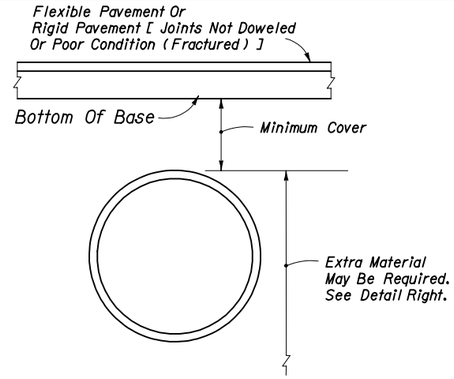

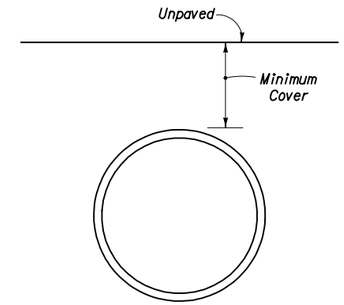

RIGID PAVEMENT

PIPE TYPE/SIZE & SHAPE	MINIMUM COVER
CONCRETE (See Note 6)	
Round & Elliptical	9"
CORRUGATED STEEL	
15"-72" Round & Arch Equiv.	9"
78" & Larger Round & Arch Eq.	15"
CORRUGATED ALUMINUM	
15"-72" Round & Arch Equiv.	9"
78"-102" Round & Arch Equiv.	15"
108" & Larger Round	18"
CORRUGATED POLYETHYLENE	
15"-48" Round	9"
POLYVINYL CHLORIDE	
15"-48" Round	9"

FLEXIBLE PAVEMENT

PIPE TYPE/SIZE & SHAPE	MINIMUM COVER
CONCRETE (See Note 6)	
Round & Elliptical	7"
CORRUGATED STEEL	
12"-30" Round	12" [12"]
36"-48" Round	18" (12") [15"]
54"-72" Round	21" (15") [18"]
78"-96" Round	(18") [27"]
102" & Larger Round	(24") [33"]
15"-30" Arch Equivalent	18" [18"]
36"-48" Arch Equivalent	24" (12") [18"]
54"-72" Arch Equivalent	27" (15") [24"]
78"-96" Arch Equivalent	(18") [30"]
102" & Larger Arch Equivalent	(24")
CORRUGATED ALUMINUM	
12"-24" Round	15" [12"]
30"-48" Round	18" (12") [18"]
54"-72" Round	24" (18") [24"]
78"-102" Round	(24") [30"]
108" & Larger	(30")
15"-24" Arch Equivalent	24" [21"]
30"-48" Arch Equivalent	27" (15") [24"]
54"-72" Arch Equivalent	30" (18") [27"]
78"-90" Arch Equivalent	(24") [30"]
96"-102" Arch Equivalent	(30")
CORRUGATED POLYETHYLENE	
15"-48" Round	15"
POLYVINYL CHLORIDE	
15"-48" Round	15"

UNPAVED

PIPE TYPE/SIZE & SHAPE	MINIMUM COVER	
	COMMERCIAL	NON-COMMERCIAL
CONCRETE (See Note 6)		
Round & Elliptical	12"	3"
CORRUGATED STEEL		
12"-30" Round	18" [15"]	12" [12"]
36"-48" Round	18" (12") [15"]	12" (12") [12"]
54"-72" Round	18" (12") [15"]	15" (12") [12"]
78"-96" Round	(18") [27"]	(12") [12"]
102" & Larger Round	24" [33"]	18" [21"]
15"-30" Arch Equivalent	18" [18"]	12" [12"]
36"-48" Arch Equivalent	24" (12") [21"]	18" (12") [15"]
54"-72" Arch Equivalent	30" (18") [24"]	24" (12") [18"]
78"-96" Arch Equivalent	(24") [27"]	(18") [21"]
102" & Larger Arch Equivalent	(30")	(24")
CORRUGATED ALUMINUM		
12"-24" Round	21" [21"]	15" [15"]
30"-48" Round	24" (18") [21"]	18" (12") [15"]
54"-72" Round	30" (24") [27"]	24" (18") [21"]
78"-102" Round	(30") [33"]	(24") [27"]
108" & Larger	36"	30"
15"-24" Arch Equivalent	27" [24"]	24" [21"]
30"-48" Arch Equivalent	33" (21") [27"]	27" (15") [21"]
54"-72" Arch Equivalent	36" (24") [30"]	30" (18") [24"]
78"-90" Arch Equivalent	(30") [36"]	(24") [30"]
96"-102" Arch Equivalent	(36")	(30")
CORRUGATED POLYETHYLENE		
15"-48" Round	21"	15"
POLYVINYL CHLORIDE		
15"-48" Round	21"	15"

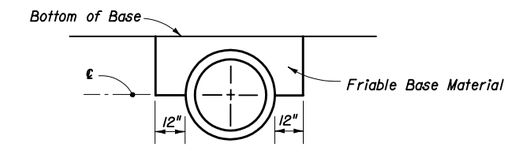

The cost of furnishing and installing the extra base material shall be included in the cost of the culvert.

FRIABLE BASE

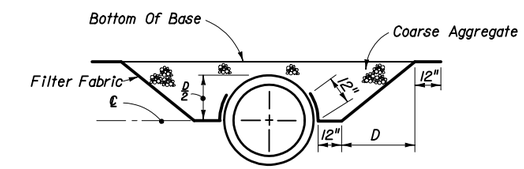

The coarse aggregate shall be placed in 6 inch lifts and compacted sufficiently as to be firm and unyielding. The coarse aggregate shall be gravel or stone meeting the requirements of Section 901-2 or 901-3 respectively. The gradation shall meet Section 901-6, Grades 4, 467, 5, 56, or 57 unless restricted in the plans. The filter fabric shall be Type D-3 (See Index No. 199). The cost of furnishing and installing the coarse aggregate and filter fabric shall be included in the cost of the culvert.

ASPHALTIC CONCRETE BASE

Note: Extra material is required when cross culverts are located on facilities subject to high speed traffic (≥ 55 mph) or high traffic volumes (> 1600 ADT) and the cover is less than 12 inches For Concrete Pipe, 15 inches For Corrugated Steel Pipe And 18 inches For Corrugated Aluminum Pipe, Corrugated Polyethylene And Corrugated Polyvinyl Chloride Pipe.

EXTRA MATERIAL FOR CROSS CULVERTS UNDER FLEXIBLE PAVEMENTS

GENERAL NOTES

1. The tabulated values are recommended minimum dimensions to withstand anticipated highway traffic loads. Additional cover may be required to support construction equipment loads or highway traffic loads before pavement is completed. Some size thickness combinations may require minimum cover greater than those listed above. See Sheets 2, 3, & 4.
2. Less than the tabulated minimum cover may be used provided suitable method (s) are detailed in the plans.
3. Values shown in parentheses ( ) are for 3" x 1" corrugations which must be specified to utilize the lesser cover.
4. The tabulated values in the brackets [] apply to Type 1-R (Spiral Rib) pipe which must be specifed to utilize the lesser cover.
5. Commercial and noncommercial refers to typical vehicular utilization of unpaved roads and drives where rutting and cover displacement may occur.
6. For Pipe Class S with diameters of 12" to 30", the minimum height of fill measured from top of finished grade to outside top of pipe is 3 feet.

MINIMUM COVER FOR CONCRETE, STEEL, ALUMINUM, POLYETHYLENE AND POLYVINYL CHLORIDE PIPE

STATE OF FLORIDA DEPARTMENT OF TRANSPORTATION

COVER HEIGHT

	Names	Dates
Designed By	EGR	09/84
Drawn By	DAE	09/84
Checked By	EGR	09/84

Approved By
State Drainage Engineer

Revision	Sheet No.	Index No.
04	1 of 5	205

ROUND PIPE DIMENSIONS

Equiv. Dia. (In.)	Area (Sq. Ft.)	Wall Thickness (In.)* Classes II, III, IV, V		
		A WALL	B WALL	C WALL
12	0.8	1 3/4	2	NA
15	1.2	1 7/8	2 1/4	NA
18	1.8	2	2 1/2	NA
24	3.1	2 1/2	3	3 3/4
30	4.9	2 3/4	3 1/2	4 1/4
36	7.1	3	4	4 3/4
42	9.6	3 1/2	4 1/2	5 1/4
48	12.6	4	5	5 3/4
54	15.9	4 1/2	5 1/2	6 1/4
60	19.6	5	6	6 3/4
66	23.8	5 1/2	6 1/2	7 1/4
72	28.3	6	7	7 3/4
78	33.2	6 1/2	7 1/2	8 1/4
84	38.5	7	8	8 3/4
90	44.4	7 1/2	8 1/2	9 1/4
96	50.3	8	9	9 3/4
102	56.7	8 1/2	9 1/2	10 1/4
108	63.7	9	10	10 3/4
114	70.9	9 1/2	—	—
120	78.5	10	—	—

* For Informational Purposes Only
Do Not Specify Wall Thickness
Option B Wall Is Industry Standard

ELLIPTICAL PIPE DIMENSIONS

Nominal Dimensions				Equiv. Dia. (In.)	Area (Sq.Ft.)	Wall Thickness (In.) Classes HE II, III, IV VE II, III, IV
Horiz.		Vert.				
Rise (In.)	Span (In.)	Rise (In.)	Span (In.)			
NA	NA	NA	NA	12	NA	NA
12	18	18	12	15	1.3	2 1/2
14	23	23	14	18	1.8	2 3/4
19	30	30	19	24	3.3	3 1/4
24	38	38	24	30	5.1	3 3/4
29	45	45	29	36	7.4	4 1/2
34	53	53	34	42	10.2	5
38	60	60	38	48	12.9	5 1/2
43	68	68	43	54	16.6	6
48	76	76	48	60	20.5	6 1/2
53	83	83	53	66	24.8	7
58	91	91	58	72	29.5	7 1/2
63	98	98	63	78	34.6	8
68	106	106	68	84	40.1	8 1/2
72	113	113	72	90	46.1	9
77	121	121	77	96	52.4	9 1/2
82	128	128	82	102	59.2	10
87	136	136	87	108	66.4	10 1/2
92	143	143	92	114	74.0	11
97	151	151	97	120	82.0	11 1/2

For Informational Purposes Only

ROUND PIPE INSTALLATIONS

PIPE DIAMETER	Maximum Height of Fill (ft)					
	Class S	Class I	Class II	Class III	Class IV	Class V
12"-30"	9	13	17	24	36	55
36"-54"	8	12	16	22	34	52
60"-78"	7	11	15	21	33	51
84"-96"	6	10	14	20	32	49

Pipe Class S	D-Load = 600 Lbs/Ft/Ft (.01" Crack) D-Load = 900 Lbs/Ft/Ft (Ultimate)
Pipe Class I	D-Load = 800 Lbs/Ft/Ft (.01" Crack) D-Load = 1200 Lbs/Ft/Ft (Ultimate)
Pipe Class II	D-Load = 1000 Lbs/Ft/Ft (.01" Crack) D-Load = 1500 Lbs/Ft/Ft (Ultimate)
Pipe Class III	D-Load = 1350 Lbs/Ft/Ft (.01" Crack) D-Load = 2000 Lbs/Ft/Ft (Ultimate)
Pipe Class IV	D-Load = 2000 Lbs/Ft/Ft (.01" Crack) D-Load = 3000 Lbs/Ft/Ft (Ultimate)
Pipe Class V	D-Load = 3000 Lbs/Ft/Ft (.01" Crack) D-Load = 3750 Lbs/Ft/Ft (Ultimate)

Note: At the option of the pipe supplier or the contractor, a Pipe Class with greater strength may be substituted for the Pipe Class designated in the plans.

ELLIPTICAL PIPE INSTALLATIONS
(All Sizes)

Installation	Maximum Height Of Fill (Ft.)	Pipe Class	Bedding Class
Horizontal	1-6*	HE II*	C
	7-10	HE III	C
	11-16	HE IV	C
	17+	Special Design	Modified
Vertical	1-6*	VE II*	C
	7-10	VE III	C
	11-16	VE IV	C
	17+	Special Design	Modified

Pipe Class HE II And VE II	D-Load = 1000 Lbs/Ft/Ft (.01" Crack) D-Load = 1500 Lbs/Ft/Ft (Ultimate)
Pipe Class HE III And VE III	D-Load = 1350 Lbs/Ft/Ft (.01" Crack) D-Load = 2000 Lbs/Ft/Ft (Ultimate)
Pipe Class HE IV And VE IV	D-Load = 2000 Lbs/Ft/Ft (.01" Crack) D-Load = 3000 Lbs/Ft/Ft (Ultimate)

*Note: HE III and VE III pipe required for depths of cover less than 2' for 15", 18" and 24" equivalent.

PIPE DIMENSIONS
CONCRETE PIPE

MAXIMUM COVER HEIGHTS
CONCRETE PIPE

Note: Height of fill (maximum cover) is measured from top of finished grade to outside top of pipe.

POLYETHYLENE PIPE	
DIAMETER	HEIGHT OF MAXIMUM FILL (Ft)
12"-48"	17'

POLYVINYL CHLORIDE PIPE	
DIAMETER	HEIGHT OF MAXIMUM FILL (Ft)
12"-48"	17'

MAXIMUM COVER FOR PLASTIC PIPE

STATE OF FLORIDA DEPARTMENT OF TRANSPORTATION

COVER HEIGHT

	Names	Dates
Designed By	EGR	09/85
Drawn By	HSD	09/85
Checked By	EGR	09/85

Approved By
State Drainage Engineer

Revision	Sheet No.	Index No.
02	2 of 5	205

ROUND PIPE - $2\frac{2}{3}$" x $\frac{1}{2}$" CORRUGATION

D (In)	Area (Sq. Ft.)	Maximum Height Of Fill (Ft.) — Sheet Thickness In Inches (Gage) 0.064 (16)	0.079 (14)	0.109 (12)	0.138 (10)	0.168 (8)	Min. Cover (Ft.)
12	.79	100+	100+	NA	NA	NA	See Sheet 1 of 5
15	1.23	100+	100+	NA	NA	NA	
18	1.77	100+	100+	100+	NA	NA	
21	2.40	100+	100+	100+	NA	NA	
24	3.14	100+	100+	100+	NA	NA	
30	4.91	85	100+	100+	NA	NA	
36	7.1	71+	88	100+	100+	NA	
42	9.6	60+	76	100+	100+	NA	
48	12.6	53	66	93	100+	100+*	
54	16.0	NS	59	82	100+	100+*	
60	19.6	NS	NS	74	95	100+*	
66	23.8	NS	NS	NS	87	100+*	
72	28.3	NS	NS	NS	79	97*	
78	33.2	NS	NS	NS	NS	90*	
84	38.5	NS	NS	NS	NS	83*	

ROUND PIPE - 3" x 1" CORRUGATION

D (In)	Area (Sq. Ft.)	Maximum Height Of Fill (Ft.) — Sheet Thickness In Inches (Gage) 0.064 (16)	0.079 (14)	0.109 (12)	0.138 (10)	0.168 (8)	Min. Cover (Ft.)
36	7.1	81	100+	100+	NA	NA	See Sheet 1 of 5
42	9.6	70	87	100+	NA	NA	
48	12.6	61	76	100+	100+	NA	
54	16.0	54	68	95	100+	NA	
60	19.6	48	61	85	100+	NA	
66	23.8	44	55	78	100	100+*	
72	28.3	40	51	71	91	100+*	
78	33.2	37	47	66	84	100+*	
84	38.5	35	43	61	78	100+*	
90	44.2	32	40	57	73	90*	
96	50.3	NS	38	53	68	84*	
102	56.7	NS	36	50	64	79*	
108	63.6	NS	NS	47	61	75*	
114	70.9	NS	NS	45	58	71*	
120	78.5	NS	NS	42	55	67*	
132	95.0	NS	NS	NS	50	61*	

ROUND PIPE - 5" x 1" CORRUGATION ③

D (In)	Area (Sq. Ft.)	Maximum Height Of Fill (Ft.) — Sheet Thickness In Inches (Gage) 0.064 (16)	0.079 (14)	0.109 (12)	0.138 (10)	0.168 (8)	Min. Cover (Ft.)
36	7.1	72	90	100+	NA	NA	See Sheet 1 of 5
42	9.6	62	77	100+	NA	NA	
48	12.6	54	68	95	100+	NA	
54	16.0	48	60	84	100+	NA	
60	19.6	43	54	76	98	NA	
66	23.8	39	49	69	89	100+*	
72	28.3	36	45	63	81	100*	
78	33.2	33	41	58	75	92*	
84	38.5	31	38	54	70	85*	
90	44.2	29	36	50	65	80*	
96	50.3	NS	34	47	61	75*	
102	56.7	NS	32	44	57	70*	
108	63.6	NS	NS	42	54	66*	
114	70.9	NS	NS	40	51	63*	
120	78.5	NS	NS	38	49	60*	
132	95.0	NS	NS	NS	44	54*	

Notes:

Increase the minimum cover values shown on Sheet 1 of 5 by 6" for gage and size combinations below the heavy lines.

Height of fill (maximum cover) is measured from top of finished grade to outside top of pipe.

*Recorrugated end not available. May be considered for cross drain and side drain applications only.

NA-Not Available

NS-Not Suitable (For Highway H-20 or HS-20 Loadings)

① Limited availability of this product. Check availability before specifying (generally limited to 3" x 1" corrugation pipe arch fabricated from 60" and smaller diameter round pipe in 12 ga. and thicker material).

② 360° perforated pipe arch (french drain pipe) is not recommended. Do not specify without checking suitability and availability.

③ 5" x 1" corrugated pipe is currently not manufactured for the Florida market. Check availability before specifying.

④ .109 in. (12 gage) for spiral rib, 8' maximum cover, $\frac{3}{4}$" x 1" x $11\frac{1}{2}$" rib spacing (2 rib) only.

PIPE ARCH: SPIRAL RIB: $\frac{3}{4}$" x $\frac{3}{4}$" x $7\frac{1}{2}$" RIB SPACING
PIPE ARCH: SPIRAL RIB: $\frac{3}{4}$" x 1" x $11\frac{1}{2}$" RIB SPACING
PIPE ARCH - $2\frac{2}{3}$" x $\frac{1}{2}$" CORRUGATION

Span (In)	Rise (In)	Equiv. Round Pipe (In)	Area (Sq. Ft.)	Minimum Sheet Thickness Required (In) (Ga)	Maximum Height Of Fill (Ft.) — Maximum Corner Pressure Lbs/Sq. Ft. 4000	6000	Min. Cover (Ft.)
17	13	15	1.1	.064 (16)	12	14	See Sheet 1 of 5
21	15	18	1.6	.064 (16)	10	14	
24	18	21	2.2	.064 (16)	7	13	
28	20	24	2.9	.064 (16)	5	11	
35	24	30	4.5	.064 (16)	NS	7	
42	29	36	6.5	.064 (16)	NS	7	
49	33	42	8.9	.079 (14)	NS	6	
57	38	48	11.6	.109 (12)	NS	8	
64	43	54	14.7	.109 (12)	NS	9	
71	47	60	18.1	.138 (10) ④	NS	10 ④	
77	52	66	21.9	.168 (8)* ④	5	10 ④	
83	57	72	26.0	.168 (8)* ④	5	10 ④	

PIPE ARCH-3" x 1" ①②③ and 5" x 1" ②③ CORR.

Span (In)	Rise (In)	Equiv. Round Pipe (In)	Area (Sq. Ft.)	Minimum Sheet Thickness Required (In) (Ga)	Maximum Height Of Fill (Ft.) — Maximum Corner Pressure Lbs/Sq.Ft. 4000	6000	Min. Cover (Ft.)
40	31	36	7.0	.079 (14)	8	12	See Sheet 1 of 5
46	36	42	9.4	.079 (14)	8	13	
53	41	48	12.3	.079 (14)	8	13	
60	46	54	15.6	.079 (14)	8	13	
66	51	60	19.3	.079 (14)	9	13	
73	55	66	23.2	.079 (14)	11	16	
81	59	72	27.4	.079 (14)	11	17	
87	63	78	32.1	.079 (14)	10	16	
95	67	84	37.0	.079 (14)	11	17	
103	71	90	42.4	.109 (12)	10	15	
112	75	96	48.0	.109 (12)	10	16	
117	79	102	54.2	.109 (12)	10	15	
128	83	108	60.5	.138 (10)	9	14	
137	87	114	67.4	.138 (10)	8	13	
142	91	120	74.5	.168 (8)	7	12	

ROUND PIPE - SPIRAL RIB
RIB SPACING ($\frac{3}{4}$" x $\frac{3}{4}$" x $7\frac{1}{2}$") or ($\frac{3}{4}$" x 1" x $11\frac{1}{2}$")

D (In.)	Area (Sq. Ft.)	Maximum Height Of Fill (Ft.) — Sheet Thickness In Inches (Gage) 0.064 (16)	0.079 (14)	0.109 (12)	0.138 (10)	0.168 (8)	Min. Cover (Ft.)
12	0.79	NA	NA	NA	NA	NA	See Sheet 1 of 5
15	1.23	NA	NA	NA	NA	NA	
18	1.77	68	72	NA	NA	NA	
21	2.40	58	62	100+	NA	NA	
24	3.14	51	72	100+	NA	NA	
30	4.91	41	58	97	NA	NA	
36	7.1	34	48	81	NA	NA	
42	9.6	29	41	69	NA	NA	
48	12.6	26	36	61	NA	NA	
54	16.0	23	32	54	NA	NA	
60	19.6	NS	29	49	NA	NA	
66	23.8	NS	26	44	NA	NA	
72	28.3	NS	24	40	NA	NA	
78	33.2	NS	NS	37	NA	NA	
84	38.5	NS	NS	35	NA	NA	
90	44.2	NS	NS	32	NA	NA	
96	50.3	NS	NS	30	NA	NA	
102	56.7	NS	NS	29	NA	NA	
108	63.6	NS	NS	27 Ⓐ	NA	NA	

Ⓐ = $\frac{3}{4}$" x 1" x $11\frac{1}{2}$" Only.

MAXIMUM COVER FOR CORRUGATED STEEL PIPE ROUND AND PIPE ARCH

STATE OF FLORIDA DEPARTMENT OF TRANSPORTATION

COVER HEIGHT

	Names	Dates
Designed By	EGR	09/85
Drawn By	HSD	09/85
Checked By	EGR	09/85

Approved By
State Drainage Engineer

Revision	Sheet No.	Index No.
04	3 of 5	205

ROUND PIPE - 2⅔" x ½" CORRUGATION

D (In)	Area (Sq. Ft.)	Maximum Height Of Fill (Ft.) Sheet Thickness In Inches (Gage) 0.060 (16)	0.075 (14)	0.105 (12)	0.135 (10)	0.164 (8)	Min. Cover (Ft.)
12	0.8	90	100+	NA	NA	NA	See Sheet 1 of 5
15	1.2	72	90	NA	NA	NA	
18	1.8	59	75	100+	NA	NA	
21	2.4	52	65	92	NA	NA	
24	3.1	44	56	79	NA	NA	
30	4.9	35 DR	44	63	NA	NA	
36	7.1	NS	36 DR	52	68	NA	
42	9.6	NS	NS	44 DR	58	NA	
48	12.6	NS	NS	38 DR	50 DR	61	
54	15.9	NS	NS	34 DR	45 DR	54 DR	
60	19.6	NS	NS	NS	39 DR	49 DR	
66	23.8	NS	NS	NS	NS	44 DR	
72	28.3	NS	NS	NS	NS	40 DR	

ROUND PIPE - 3" x 1" CORRUGATION

D (In)	Area (Sq. Ft.)	Maximum Height Of Fill (Ft.) Sheet Thickness In Inches (Gage) 0.060 (16)	0.075 (14)	0.105 (12)	0.135 (10)	0.164 (8)	Min. Cover (Ft.)
36	7.1	33	42	60	NA	NA	See Sheet 1 of 5
42	9.6	28	36	51	NA	NA	
48	12.6	24	31	45	58	NA	
54	15.9	21	28	39	51	NA	
60	19.6	19	24	35	46	NA	
66	23.8	15 DR	22	32	42	51	
72	28.3	NS	20 DR	29	38	47	
78	33.2	NS	15 DR	27	35	43	
84	38.5	NS	NS	24 DR	32	40	
90	44.2	NS	NS	23 DR	30	37	
96	50.3	NS	NS	21 DR	28 DR	34	
102	56.7	NS	NS	NS	26 DR	32	
108	63.6	NS	NS	NS	24 DR	30 DR	
114	70.9	NS	NS	NS	NS	28 DR	
120	78.5	NS	NS	NS	NS	27 DR	

ROUND PIPE - SPIRAL RIB
RIB SPACING (¾" x ¾" x 7½")

D (In.)	Area (Sq. Ft.)	Maximum Height Of Fill (Ft.) Sheet Thickness In Inches (Gage) 0.060 (16)	0.075 (14)	0.105 (12)	0.135 (10)	0.164 (8)	Min. Cover (Ft.)
12	0.79	NA	NA	NA	NA	NA	See Sheet 1 of 5
15	1.23	63 ①	87 ①	NA	NA	NA	
18	1.77	55	76	NA	NA	NA	
21	2.40	47	65	NA	NA	NA	
24	3.14	41	57	NA	NA	NA	
30	4.91	33 DR	45	73	NA	NA	
36	7.1	27 ④	38 DR	61	NA	NA	
42	9.6	NS	32 ④	52	NA	NA	
48	12.6	NS	NS	46	65	NA	
54	16.0	NS	NS	40 DR	57	NA	
60	19.6	NS	NS	36 ④	52	NA	
66	23.8	NS	NS	NS	47 DR	NA	
72	28.3	NS	NS	NS	43 ④	NA	
78	33.2	NS	NS	NS	39 ④	NA	
84	38.5	NS	NS	NS	34 ④	NA	
90	44.2	NS	NS	NS	30 ①③④	NA	
96	50.3	NS	NS	NS	27 ①③④	NA	

- NOTE

Special installation required.
Refer to AASHTO Standard Specifications for Highway Bridges or ASTM B788-88 and manufacturer's recommendations.

PIPE ARCH - 2⅔" x ½" CORRUGATION ②

Span (In)	Rise (In)	Equiv. Round Pipe (In)	Area (Sq. Ft.)	Minimum Sheet Thickness Required (In) (Ga)	Maximum Height Of Fill (Ft.) Maximum Corner Pressure-Lbs/Sq.Ft. 4000	6000	Min. Cover (Ft.)
17	13	15	1.1	.060 (16)	12	15	See Sheet 1 of 5
21	15	18	1.6	.060 (16)	10	14	
24	18	21	2.2	.060 (16)	7	13	
28	20	24	2.9	.075 (14)	5	11	
35	24	30	4.5	.075 (14)	NS	7	
42	29	36	6.5	.105 (12)	NS	7	
49	33	42	8.9	.105 (12)	NS	6	
57	38	48	11.6	.135 (10)	NS	8	
64	43	54	14.7	.135 (10)	NS	9	
71	47	60	18.1	.164 (8)	NS	10	
77	52	66	21.9	.164 (8)	NS	10	
83	57	72	26.0	.164 (8)	NS	10	

PIPE ARCH - 3" x 1" CORRUGATION ① ②

Span (In)	Rise (In)	Equiv. Round Pipe (In)	Area (Sq. Ft.)	Minimum Sheet Thickness Required (In) (Ga)	Maximum Height Of Fill (Ft.) Maximum Corner Pressure-Lbs/Sq.Ft. 4000	6000	Min. Cover (Ft.)
40	31	36	7.0	.060 (16)	8	12	See Sheet 1 of 5
46	36	42	9.4	.060 (16)	8	13	
53	41	48	12.3	.060 (16)	8	13	
60	46	54	15.6	.075 (14)	8	13	
66	51	60	19.3	.075 (14)	8	13	
73	55	66	23.2	.105 (12)	11	16	
81	59	72	27.4	.105 (12)	11	17	
87	63	78	32.1	.105 (12)	10	16	
95	67	84	37.0	.105 (12)	11	17	
103	71	90	42.4	.135 (10)	10	15	
112	75	96	48.0	.135 (10)	10	16	
117	79	102	54.2	.164 (8)	10	15	

PIPE ARCH - SPIRAL RIB
RIB SPACING (¾" x ¾" x 7½")

Span (In)	Rise (In)	Equiv. Round Pipe (In)	Area (Sq. Ft.)	Minimum Sheet Thickness Required (In) (Ga)	Maximum Height Of Fill (Ft.) Maximum Corner Pressure-Lbs/Sq.Ft. 4000	6000	Min. Cover (Ft.)
16	14	15	1.2	.060 (16)	12	13	See Sheet 1 of 5
20	16	18	1.7	.060 (16)	10	12	
23	19	21	2.3	.060 (16)	7	11	
27	21	24	3.0	.060 (16)	5	10	
33	26	30	4.7	.075 (14)	NS	9	
40	31	36	7.0	.075 (14)	NS	8	
46	36	42	9.4	.105 (12)	NS	8	
53	41	48	12.3	.105 (12)	NS	8	
60	46	54	15.6	.105 (10)	NS	8	
66	51	60	19.3	.135 (10)	NS	8	
73	55	66	23.2	.135 (10) ④	NS	8	
81	59	72	27.4	.135 (10) ④	NS	8	

MAXIMUM COVER FOR CORRUGATED ALUMINUM ALLOY ROUND PIPE AND PIPE ARCH

Notes:

Increase the minimum cover values shown on Sheet 1 of 5 by 6" for gage and size combinations below the heavy lines.

Height of fill (maximum cover) is measured from top of finished grade to outside top of pipe.

NA - Not Available

NS - Not Suitable (For Highway H-20 or HS-20 Loadings)

DR - Design Review is recommended for each specific application. The review should identify any special handling, installation, backfill procedures, and construction load restrictions which may be required. (The review performed by the designer does not relieve the contractor from analyzing and taking any necessasry precautions required to protect partially or completely constructed pipe from the equipment used during construction.) (NOTE: The DESIGNER may use a thicker gage in lieu of the Design Review.)

① Limited availability of this product. Check availability before specifying.

② 360° perforated pipe (french drain pipe) is not recommended in the pipe arch shape. Do not specify without checking both for suitability and availability.

③ This size and gage combination must be strutted during installation per manufacturers recommendations. Extra care will be required during handling and installation.

④ Use of this size and gage combination must be approved by the State Drainage Engineer.

STATE OF FLORIDA DEPARTMENT OF TRANSPORTATION

COVER HEIGHT

	Names	Dates
Designed By	EGR	09/85
Drawn By	HSD	09/85
Checked By	EGR	09/85

Approved By
State Drainage Engineer

Revision	Sheet No.	Index No.
04	4 of 5	205

Aluminum Structural Plate
Height of Cover Limits*
Combination Metal Thickness, Reinforcing Rib Type, and Rib Spacing
Round Shape- HS 20 Live Load

Diameter (Ft.-In.)	Area (Sq. Ft.)	Minimum Height of Cover (Ft.) 1.00	1.50	2.00	2.50	3.00	3.50
5-0	19	.125 (45)	.100 (31)	.100 (31)	.100 (31)	.100 (31)	.100 (31)
5-6 6-0	23 28	.125-II-18 (37)	.100 (25)	.100 (25)	.100 (25)	.100 (25)	.100 (25)
6-6 7-0	32 38	.125-II-18 (32)	.100 (22)	.100 (22)	.100 (22)	.100 (22)	.100 (22)
7-6 8-0	44 50	.125-II-9 (28)	.150 (37)	.100 (19)	.100 (19)	.100 (19)	.100 (19)
8-6 9-0	56 63	.125-IV-9 (25)	.125-II-18 (25)	.100 (17)	.100 (17)	.100 (17)	.100 (17)
9-6 10-0	71 79	.125-IV-9 (22)	.125-II-18 (22)	.125 (22)	.100 (15)	.100 (15)	.100 (15)
10-6 11-0	87 95	.175-IV-9 (32)	.125-II-18 (20)	.125-II-27 (20)	.100 (14)	.100 (14)	.100 (14)
11-6 12-0	104 114		.125-IV-18 (18)	.125-II-27 (18)	.125 (18)	.100 (12)	.100 (12)
12-6 13-0	124 134		.150-IV-18 (23)	.125-II-27 (17)	.150 (23)	.125 (17)	.125 (17)
13-6 14-0	145 156		.125-IV-9 (16)	.125-IV-27 (16)	.125-II-27 (16)	.150 (21)	.150 (21)
14-6 15-0	167 179		.125-II-54 (15)	.125-IV-9 (15)	.125-IV-27 (15)	.125-II-27 (15)	.125-II-54 (15)
15-6 16-0	191 204		.150-IV-9 (18)	.125-IV-18 (14)	.125-II-27 (14)	.150-II-54 (18)	3.8/II/1350 (18)
16-6 17-0	217 231		.225-IV-9 (27)	.150-IV-18 (17)	.150-II-27 (17)	.150-II-27 (17)	.150-II-27 (17)
17-6 18-0	245 259			.175-IV-18 (19)	.175-II-27 (19)	.175-II-27 (19)	.175-II-27 (19)
18-6 19-0	274 289			.175-IV-9 (18)	.175-IV-27 (18)	.175-II-27 (18)	.175-II-27 (18)
19-6	305			.200-IV-9 (20)	.200-IV-27 (20)	.200-II-27 (20)	.200-II-27 (20)

Aluminum Structural Plate
Height of Cover Limits*
Combination Metal Thickness, Reinforcing Rib Type, and Rib Spacing
Arch Shape- HS 20 Live Load

Span (Ft.-In.)	Rise (Ft.-In.)	Area (Sq.Ft.)	Minimum Height of Cover (Ft.) 1.00	1.50	2.00	2.50	3.00	3.50
5-0	1-9 2-3 2-7	7 9 10	.125 (45)	.100 (31)	.100 (31)	.100 (31)	.100 (31)	.100 (31)
6-0	1-10 2-4 2-9 3-2	8 10 13 15	.125-II-18 (37)	.100 (25)	.100 (25)	.100 (25)	.100 (25)	.100 (25)
7-0	2-4 2-10 3-3 3-8	12 15 18 20	.125-II-18 (32)	.100 (22)	.100 (22)	.100 (22)	.100 (22)	.100 (22)
8-0	2-11 3-4 4-2	17 20 26	.125-II-9 (28)	.150 (37)	.100 (19)	.100 (19)	.100 (19)	.100 (19)
9-0	2-11 3-10 4-8	19 26 33	.125-IV-9 (25)	.125-II-18 (25)	.100 (17)	.100 (17)	.100 (17)	.100 (17)
10-0	3-6 4-5 5-2	25 33 41	.125-IV-9 (22)	.125-II-18 (22)	.125 (22)	.100 (15)	.100 (15)	.100 (15)
11-0	3-6 4-6 5-8	28 37 50	.175-IV-9 (32)	.125-II-18 (20)	.125-II-27 (20)	.100 (14)	.100 (14)	.100 (14)
12-0	4-1 5-0 6-3	35 45 59		.125-IV-18 (18)	.125-II-27 (18)	.125 (18)	.100 (12)	.100 (12)
13-0	4-1 5-1 5-11 6-9	38 49 59 70		.150-IV-18 (23)	.125-II-27 (17)	.150 (23)	.100 (11)	.100 (11)
14-0	4-8 5-7 6-5 7-3	47 58 70 81		.125-IV-9 (16)	.125-IV-27 (16)	.125-II-27 (16)	.100 (11)	.100 (11)
15-0	4-8 5-8 6-7 7-5 7-9	50 63 75 87 93		.125-IV-9 (15)	.125-IV-27 (15)	.125-II-27 (15)	.125 (15)	.125 (15)
16-0	5-3 6-2 7-1 7-11 8-3	60 73 86 99 105		.150-IV-9 (18)	.125-IV-18 (14)	.125-II-27 (14)	.150 (18)	.125 (14)
17-0	5-3 6-3 7-2 8-0 8-10	64 78 92 105 119		.225-IV-9 (27)	.150-IV-18 (17)	.125-II-27 (13)	.175 (20)	.150 (17)
18-0	5-9 6-9 7-8 8-6 8-11	75 90 105 119 126			.175-IV-18 (19)	.125-IV-27 (12)	.200 (22)	.175 (19)
19-0	6-4 7-4 8-2 9-0 9-5	87 103 118 133 141			.125-IV-9 (11)	.125-IV-27 (11)	.125-IV-54 (11)	.125-IV-54 (11)

Aluminum Structural Plate
Height of Cover Limits*
Combination Metal Thickness, Reinforcing Rib Type, and Rib Spacing
Underpass Shape- HS 20 Live Load

Span (Ft.-In.)	Rise (Ft.-In.)	Area (Sq.Ft.)	Minimum Height of Cover (Ft.) 1.00	1.50	2.00	2.50	3.00	3.50
6-1	5-9	28	.125-II-18 (29)	.100 (25)	.100 (25)	.100 (25)	.100 (25)	.100 (25)
6-3 6-3 6-2 6-4 6-3 6-5	6-1 6-5 6-11 7-3 7-9 8-1	30 32 34 37 39 42	.125-II-18 (25)	.100 (22)	.100 (22)	.100 (22)	.100 (22)	.100 (22)
12-1	11-0	106		.125-IV-18 (14)	.125-II-27 (14)	.125 (14)	.100 (12)	.100 (12)
12-10 13-0	11-2 12-0	114 124		.150-IV-18 (13)	.125-II-27 (13)	.150 (13)	.125 (13)	.125 (13)
13-8 14-0	12-4 12-11	133 143		.125-IV-9 (12)	.125-IV-27 (12)	.125-II-27 (12)	.125-II-54 (12)	.125-II-54 (12)
14-6 14-8	13-5 14-1	155 165		.125-IV-9 (11)	.125-IV-27 (11)	.125-II-27 (11)	.125-II-54 (11)	.125-II-54 (11)
15-5 15-6	14-5 15-2	177 190		.150-IV-9 (11)	.125-IV-18 (11)	.125-II-27 (11)	.125-II-27 (11)	.125-II-2 (11)
16-2 16-6 16-8	15-6 16-0 16-4	200 208 215		.225-IV-9 (10)	.150-IV-18 (10)	.150-II-27 (10)	.150-II-27 (10)	.150-II-27 (10)

Aluminum Structural Plate
Height of Cover Limits*
Combination Metal Thickness, Reinforcing Rib Type, and Rib Spacing
Pipe-Arch Shape- HS 20 Live Load

Span (Ft.-In.)	Rise (Ft-In)	Area (Sq-Ft)	Minimum Height of Cover (Ft.) 1.00	1.50	2.00	2.50	3.00	3.50
6-7 6-11	5-8 5-9	30 32	.125-II-18 (25)	.100 (22)	.100 (22)	.100 (22)	.100 (22)	.100 (22)
7-3 7-9 8-1	5-11 6-0 6-1	34 37 39	.125-IV-18 (22)	.150 (22)	.100 (19)	.100 (19)	.100 (19)	.100 (19)
8-5 8-10	6-3 6-4	42 45	.125-IV-9 (19)	.125-II-18 (19)	.100 (17)	.100 (17)	.100 (17)	.100 (17)
9-3 9-7 9-11	6-5 6-6 6-8	47 50 53	.125-IV-9 (17)	.125-II-18 (17)	.125 (17)	.100 (15)	.100 (15)	.100 (15)
10-3 10-9 11-1	6-9 6-10 7-0	56 58 61	.175-IV-9 (16)	.125-II-18 (16)	.125-II-27 (16)	.100 (14)	.100 (14)	.100 (14)
11-5 11-9	7-1 7-2	64 68		.125-IV-18 (14)	.125-II-27 (14)	.125 (14)	.100 (12)	.100 (12)
12-3 12-7 12-11 13-1 13-1	7-3 7-5 7-6 8-2 8-4	71 74 77 83 87		.150-IV-18 (13)	.125-II-27 (13)	.150 (13)	.100 (11)	.100 (11)
13-11 14-0 13-11	8-5 8-7 9-5	90 94 102		.125-IV-9 (12)	.125-IV-27 (12)	.125-II-27 (12)	.100 (11)	.100 (11)
14-3 14-8 14-11	9-7 9-8 9-10	106 110 114		.125-IV-9 (11)	.125-IV-27 (11)	.125-II-27 (11)	.125 (11)	.125 (11)
15-4 15-7 16-1	10-0 10-2 10-4	119 123 128		.150-IV-9 (11)	.125-IV-18 (11)	.125-II-27 (11)	.125-II-54 (11)	.125 (11)
16-4	10-6	132		.225-IV-9 (10)	.150-IV-18 (10)	.125-II-27 (10)	.125-II-54 (10)	.125-II-54 (10)

ALUMINUM STRUCTURAL PLATE NOTES

1. Allowable cover (minimum & maximum) is measured from the outside valley of crown plate to the bottom of flexible pavement or from the outside valley of the crown plate to the top of rigid pavement. Minimum cover must be maintained in unpaved areas. Maximum cover is measured at the highest fill and/or the highest pavement elevation.
2. To find the minimum material requirements for the aluminum structural plate structure:
   a. Select the span in the left hand column that is equal to or larger than structure size required.
   b. Select the cover in the top row that is equal to or smaller than that required for the site.
   c. Intersect appropriate span and cover to find the appropriate plate.

   Example: Round Pipe, Span = 17'-0", Height of Cover = 2'-7" (use 2.5 ft. in table).
   Ans: .150/II/27 (17)
   The table selections show metal thickness, rib type, rib spacing and maximum cover.
   Example: .150/II/27 = 0.150" thick plate structure with Type II rib at 27" on centers on the crown.
   Number (17) in parenthesis below combination indicates maximum cover in feet for the given combination of plate thickness, rib type, and rib spacing.
3. Arch shapes shown are single radius and have a rise-to-span ratio of 0.30 to 0.53 Structures with rise-to-span ratios of less than 0.30 are typically not used because of structural considerations.
4. Tables based on HS 20 wheel loads.

DESIGN NOTES

1. The plans must call out size, metal thickness, reinforcing rib type and rib spacing.
2. Pipe-arch and underpass shapes will generate high corner bearing pressures against the sidefill and foundation. The height of cover is directly affected by these bearing pressures. The surrounding soil and foundation must be checked to ensure that they to react against these pressures to avoid inducing excessive strain in plate.

* Number in ( ) below combination indicates maximum cover for the given combination plate thickness, rib type and rib spacing. All maxium cover depths are given in feet. (See Note Number 2 Under Structural Plate Notes).

MINIMUM AND MAXIMUM COVER FOR ALUMINUM STRUCTURAL PLATE

STATE OF FLORIDA DEPARTMENT OF TRANSPORTATION

COVER HEIGHT

	Names	Dates
Designed By	WPH	7/97
Drawn By	JDT	7/97
Checked By	WPH	7/97

Approved By
State Drainage Engineer

Revision	Sheet No.	Index No.
00	5 of 5	205