Changes to 2010 UAM References for the 201x UAM dated 4/23/2012:

Std Spec 425-6.7 – Page 2

Std Spec 555-4.3 through 555-4.4 – Page 3

Std Index 307, Miscellaneous Utility Details – Page 4

Std Spec 556-2 – Page 5

SAE J845 - Page 8

SAE J595 – Page 9

Std Spec 425-6.7

425-6.7 Adjusting Existing Structures: Cut down or extend existing manholes, catch basins, inlets, valve boxes, etc., within the limits of the proposed work, to meet the finished grade of the proposed pavement, or if outside of the proposed pavement area, to the finished grade designated on the plans for such structures. Use materials and construction methods which meet the requirements specified above to cut down or extend the existing structures. The Contractor may extend manholes needing to be raised using adjustable extension rings of the type which do not require the removal of the existing manhole frame. Use an extension device that provides positive locking action and permits adjustment in height as well as diameter and meets the approval of the Engineer. Restore final road surface to match the existing pavement type. When concrete is used to meet compaction requirements and the final road surface is asphalt, install the concrete collar such that the final course of asphalt is placed over the concrete collar to the lip of the manhole cover.

Std Spec 555-4.3 through 555-4.4

555-4.3 Product Bore Hole Diameter: Minimize potential damage from soil displacement/settlement by limiting the ratio of the bore hole to the product size. The size of the back reamer bit or pilot bit, if no back reaming is required, will be limited relative to the product diameter to be installed as follows:

Maximum Pilot or Back-Reamer Bit Diameter When Rotated 360 Degrees	
Outside Pipe Diameter Inches*	Maximum Bit Diameter Inches
<8	Diameter + 4
8 to 24	1.5 x Diameter
>24	Diameter + 12
*Use manufacturer's recommendation for pipe with restrained joints.	

555-4.4 Drilling Fluids: Use a mixture of bentonite clay or other approved stabilizing agent mixed with potable water with a minimum pH of 6.0 to create the drilling fluid for lubrication and soil stabilization. Do not use any other chemicals or polymer surfactants in the drilling fluid without written consent from the Engineer. Certify to the Engineer in writing that any chemicals to be added are environmentally safe and not harmful or corrosive to the facility. Identify the source of water for mixing the drilling fluid. Any water source used other than a potable water source may require a pH test.

Std Index 307, Miscellaneous Utility Details
On following Sheets

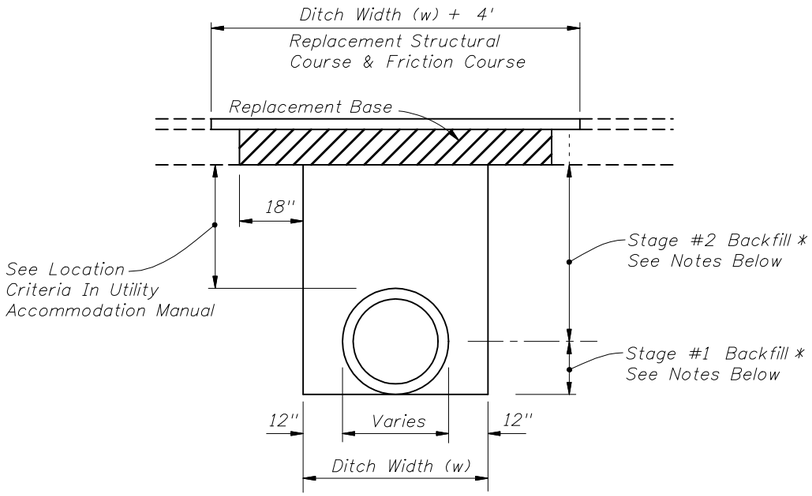

FLEXIBLE PAVEMENT NOTES

PAVEMENT REMOVAL AND REPLACEMENT

Pavement shall be mechanically sawed.

The replacement asphalt shall match the existing structural and friction courses for type and thickness.

The new base materials shall be either of the same type and composition as the materials removed or of equal or greater structural adequacy (See Index No. 514).

BACKFILL

COMPACTED AND STABILIZED FILL OPTION

Backfill material shall be placed in accordance with Section 125 of the Standard Specifications.

In Stage #1, construct compacted fill beneath the haunches of the pipe, using mechanical tamps suitable for this purpose. This compaction applies to the material placed beneath the haunches of the pipe and above any bedding.

In Stage #2, construct compacted fill along the sides of the pipe and up to the bottom of the base, with the upper 12" receiving Type B Stabilization. In lieu of Type B Stabilization, the Contractor may construct using Optional Base Group 3.

*** FLOWABLE FILL OPTION**

If compaction can not be achieved through normal mechanical methods then flowable fill may be used.

Flowable fill is to be placed in accordance with Section 121 of the Specifications, as approved by the Engineer.

Do not allow the utility being installed to float. If a method is provided to prevent flotation from occurring, Stages #1 and #2 can be combined, if approved by the Engineer.

In Stage #1, place flowable fill midway up on both sides of the utility. Allow to harden before placing Stage #2.

In Stage #2, place flowable fill to the bottom of the existing base course.

FLEXIBLE PAVEMENT CUT

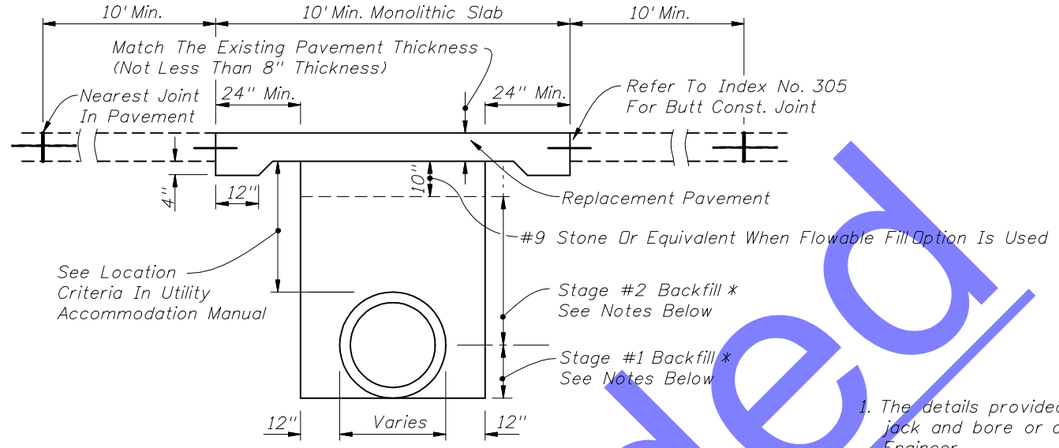

RIGID PAVEMENT NOTES

PAVEMENT REMOVAL AND REPLACEMENT

High early strength cement concrete (3000 psi) meeting the requirements of Standard Specification 346 shall be used for rigid pavement replacement.

Pavement shall be mechanically sawed and restored to conform with existing pavement joints within 12 hours. (See Index No. 305)

GRANULAR BACKFILL

Any edgedrain system that is removed shall be replaced with the same type materials. Any edgedrain system that is damaged shall be repaired with methods approved by the Engineer.

Fill material shall be placed in accordance with the Standard Specifications. Fill material shall be special select soil in accordance with Index No. 505.

In Stage #1, construct compacted fill beneath the haunches of the pipe, using mechanical tamps suitable for this purpose. This compaction applies to the material placed beneath the haunches of the pipe and above any bedding.

In Stage #2, construct fill along the sides of the pipe and up to the bottom of replacement pavement.

*** FLOWABLE FILL OPTION**

If mechanical compaction can not be achieved through normal mechanical methods then flowable fill may be used.

Flowable fill is to be placed in accordance with Section 121 of the Specifications, as approved by the Engineer.

Do not allow the utility being installed to float. If a method is provided to prevent flotation from occurring, Stages #1 and #2 can be combined, if approved by the Engineer.

In Stage #1, place flowable fill midway up on both sides of the utility. Allow to harden before placing Stage #2.

In Stage #2, place flowable fill to the bottom of the stone layer.

RIGID PAVEMENT CUT

GENERAL NOTES

1. The details provided in this standard index apply to cases in which jack and bore or directional boring methods are not required by the Engineer.
2. Flowable fill shall not be placed directly over loose, or high plastic, or muck material (see Index 505) which will cause settlement due to fill weight. Where highly compressible material exists, the amount, shape and depth of flowable fill must be engineered to prevent pavement settlement.
3. These details do not apply to utility cuts longitudinal to the centerline of the roadway which may require the additional use of geotextiles, special bedding and backfill, or other special requirements.
4. Method of construction must be approved by the Engineer.
5. Some pipe may require special granular backfill up to 6" above top of pipe. Geotextiles may be required to encapsulate the special granular material.
6. Where asphalt concrete overlays exist over full slab concrete pavement, the replacement pavement shall have an overlay constructed over the replacement slab. The overlay shall match the existing asphalt pavement thickness. The replacement friction course shall match the existing friction course, except structural course may be used in lieu of dense graded friction course.

   Existing broken and seated pavements shall be treated as flexible pavements.
7. All shoulder pavement, curb, curb and gutter, and their substructure disturbed by utility trench cut construction shall be restored in kind.
8. The use of flowable fill to reduce the time traffic is taken off a facility is acceptable but must have prior approval by the Engineer. Flowable fill use is allowed only when properly engineered for pavement crossings, whether straight or diagonal, and shall not be installed for significant depths or lengths. The maximum length shall be fifty (50) feet and a maximum depth of six (6) feet unless supported by an engineering document prepared by a registered professional engineer that specializes in soils engineering. The engineering document shall address the evaluation of local groundwater flow interruption and settlement potential.
9. Excavatable flowable fill is to be used when the flowable fill option is selected.
10. When approved by the Engineer, in lieu of the pavement and base, non-excavatable flowable fill may be used for manhole stabilization and ring and cover adjustments. Excavatable flowable fill shall not be used within the limits of the pavement and base.

TRENCH CUTS AND RESTORATIONS ACROSS ROADWAYS

Sheet Added

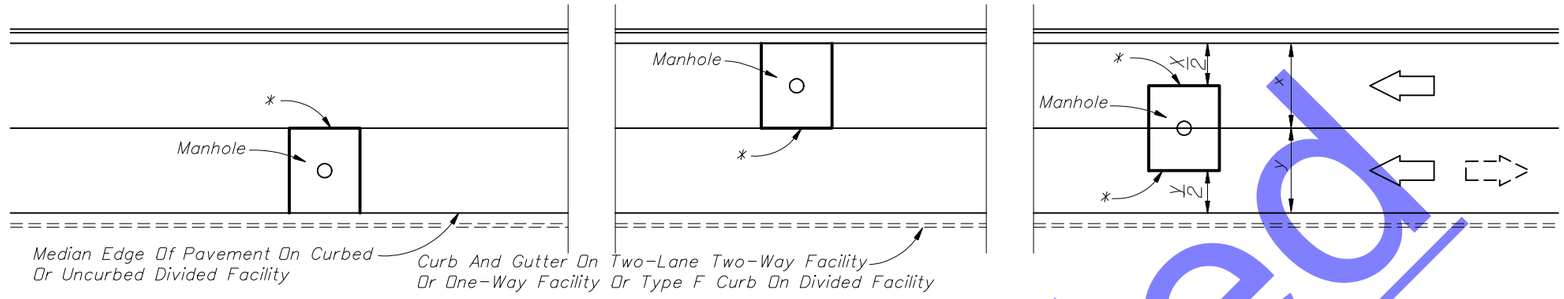

*Longitudinal Cut Lines For Both Curbed And Uncurbed Facilities Must Coincide With A Regular Seam Or Midlane Point In Order To Be Outside The Wheel Path

PLAN VIEW

FOR TWO OR MORE LANES (TWO LANES SHOWN)

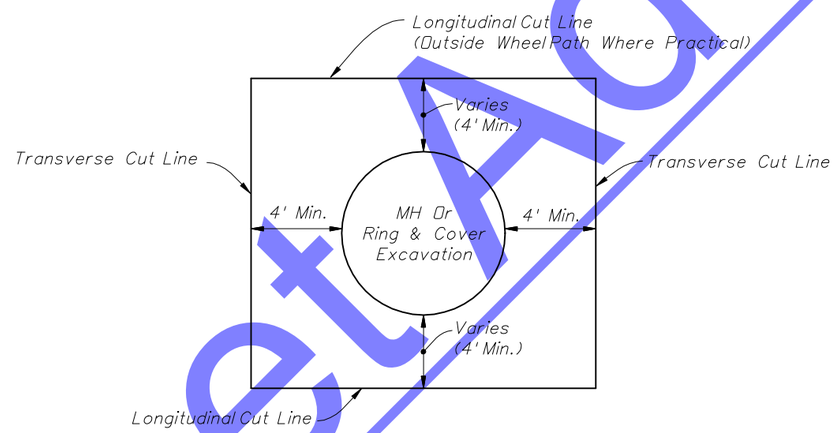

PARTIAL CUTS FOR RING AND COVER ADJUSTMENTS

NOTES

1. No irregular seams are permitted. All seams must be clean sawed.
2. Pavement cut seams for underground utility structures in rigid pavement are the same longitudinally, but the transverse seams shall extend to the nearest existing joint.
3. See Sheet 1 for replacement pavement.

NONTRENCH PAVEMENT CUTS FOR UNDERGROUND UTILITY STRUCTURES IN PAVEMENT

Sheet Added

Std Spec 556-2

~~**556-2 Materials.**~~
~~Select materials approved for installation within the right-of-way based on their suitability for the construction method as defined in Table 556-2.1. After determining product suitability, individual material standards as contained in Table 556-2.2 apply.~~

~~Table 556-2.1~~ ~~Product Suitability by Construction Method~~		
~~Type~~	~~Pipe/Casing Installation Mode~~	~~Suitable Pipe/Casing~~
~~Jack and Bore~~	~~Jacking~~	~~Steel, Plastic~~
~~Micro tunneling~~	~~Jacking~~	~~DI, FRPM, PC, PCCP, RCCP, RCP, Steel~~

~~Table 556-2.2~~ ~~Material Standards Acceptable for J&B and MT Installations~~		
~~Material Type~~	~~Non-Pressure~~	~~Pressure~~
~~Ductile Iron (DI)~~	~~AWWA C150/C151~~ ~~ASTM A716, A747~~	~~AWWA C150/C151~~
~~Fiberglass Reinforced Polymer Mortar (FRPM)~~	~~ASTM D 3262~~	~~ASTM D 3517~~ ~~AWWA C950~~
~~Polymer Concrete (PC)~~	~~DIN 54815-1 & 2~~	~~N/A~~
~~Prestressed Concrete Cylinder Pipe (PCCP)~~	~~N/A~~	~~AWWA C300~~
~~Reinforced Concrete Cylinder Pipe (RCCP)~~	~~N/A~~	~~ASTM C361~~
~~Reinforced Concrete Pipe (RCP)~~	~~ASTM C 76~~	~~ASTM C361~~ ~~AWWA C300/C302~~
~~Steel~~	~~ASTM A139 Grade B(1)~~ ~~API 2B(2)~~	~~AWWA C200~~ ~~API 2B(2)~~
~~Polyvinyl Chloride (PVC)~~	~~ASTM D 1785~~	~~N/A~~
~~Polyethylene (PE)~~	~~ASTM D 2447~~ ~~ASTM D 2513 FOR GAS > 3 Inches~~	~~N/A~~
~~Polybutylene (PB)~~	~~ASTM D 2662~~	~~N/A~~
~~Cellulose Acetate Butyrate (CAB)~~	~~ASTM D 1503~~	~~N/A~~
~~Acrylonitrile Butadiene Styrene (ABS)~~	~~ASTM D 1527~~	~~N/A~~
~~Reinforced Thermosetting Resin Pipe (RTRP)~~	~~ASTM D 2296 OR~~ ~~ASTM D2997~~	~~N/A~~

~~(1) No hydrostatic test required~~ ~~(2) Dimensional tolerances only~~

~~Unless otherwise tested and approved by the Department, only use encasement pipe or uncased carrier pipe material that is new and has smooth interior and exterior walls.~~

~~**556-2.1 Steel Pipe Casing and Welds:** In addition to meeting or exceeding the conditions contained in Tables 556-2.1 and Table 556-2.2, meet the following requirements:~~

~~(a) The size of the steel casing must be at least 6 inches larger than the largest outside diameter of the carrier.~~

~~(b) The casing pipe must be straight seam pipe or seamless pipe.~~

~~(c) All steel pipe may be bare inside and out, with the manufacturer's recommended minimum nominal wall thicknesses to meet the greater of either installation, loading or carrier requirements.~~

~~(d) All steel casing pipe must be square cut and have dead-even lengths which are compatible with the J&B equipment.~~

~~Use steel pipe casings and welds meeting or exceeding the thickness requirements to achieve the service life requirements noted in the Department Drainage Manual Chapter 6. For purposes of determining service life, ensure that casings installed under roadways meet or exceed cross drain requirements and casings under driveways meet or exceed side drain pipe requirements. For purposes of material classification, consider steel pipe casing structural plate steel pipe. Ensure that steel pipe casing of insufficient length achieves the required length through fully welded joints. Ensure that joints are air-tight and continuous over the entire circumference of the pipe with a bead equal to or exceeding the minimum of either that required to meet the thickness criteria of the pipe wall for jacking and loading or service life. A qualified welder must perform all welding.~~

~~**556-2.2 Reinforced Concrete Pipe Casing:** In addition to meeting or exceeding the conditions contained in Tables 556-2.1 and Table 556-2.2, meet the following requirements:~~

~~Ensure that concrete pipe complies with the following minimum requirements:~~

~~(a) 5,000 psi concrete compressive strength~~

~~(b) Class III, IV, or V as required by load calculations, with a C-wall~~

~~(c) Full circular inner and/or outer reinforcing cage~~

~~(d) Multiple layers of steel reinforcing cages, wire splices, laps and spacers are permanently secured together by welding in place~~

~~(e) Straight outside pipe wall with no bell modification~~

~~(f) No elliptical reinforcing steel is allowed~~

~~(g) Single cage reinforcement with a 1 inch minimum cover from the inside wall~~

~~(h) Double cage reinforcement with a 1 inch minimum cover from each wall~~

~~(i) Joints are gasket type~~

~~(j) Additional joint reinforcement~~

~~Upon installation, the Engineer may, at his discretion, require the Contractor to perform concrete wiping or injection of the joints if it is believed the joints have not maintained their water tightness during the jacking operation. No additional payment will be made for this operation.~~

~~**556-2.3 Plastic Pipe Casing**: Plastic pipe may be jacked and bored if its physical properties are sufficient, and it is rigid such that when supported or suspended at mid point it maintains a straight alignment. If plastic pipe is Jacked and Bored it may not be used as a pressurized carrier. Plastic pipe casing installed by the jack and bore method requires the use of an auger. Open end jacking without the use of an auger for continuous cleanout of the bore as the pipe is advanced is not permitted. Closed end jacking is not permitted.~~

~~**556-2.4 Pipe Couplings and Joints:** In addition to meeting or exceeding the conditions contained in Tables 556-2.1 and 556-2.2, to minimize potential for bore failure, couplings must not project at right angles from the casing diameter by more than 3/4 inch.~~

~~(a) Steel Pipe Coupling and Joints:~~

~~1. Welds must comply with 556-2.1(d) when couplings are not used or when the coupling thickness is less than the casing thickness.~~

~~2. When couplings are used the casing joint needs only to be tack welded. Couplings must have a full bead weld such that the thickness, when measured at an angle of 45 degrees to the casing and coupling interface, must be no less than the casing thickness.~~

~~(b) Plastic Pipe Couplings and Joints:~~

~~1. Must meet or exceed all ASTM strength and composition standards established for the casing material to which they are being attached.~~

~~2. Joints must be made sufficiently strong to withstand the pressures of jacking. All chemical welds must be completely set and cured before any jacking is attempted.~~

SAE J845:

Full SAE Standard available at: http://standards.sae.org/j845_200712

Summary of Changes:

1. Various editorial changes were made to harmonize the language with that used in other warning lights and devices standards.
2. Multiple flash patterns and cyclic patterns have been added. End users have increasingly been requesting non-repetitive flash patterns to prevent complacency.
3. Light source definition has been added.
4. Light pulse and flash definitions have been revised.
5. Optical power has been defined.
6. Multiple flash patterns that are user adjustable must be rated as the lowest performance mode.
7. Flash Rate was added to Section 5, "Tests".
8. Test Voltage – In conformance with other optical warning device reports, a tolerance has been added to the test voltages, and requirements added for 36 volt systems.
9. Environmental tests for flash rate were revised.
10. Photometric performance has been changed from flash energy to meeting a specified optical power and peak intensity. Advances in laboratory instrumentation have made it practical and cost effective to directly measure the optical power generated by an optical warning device. The direct measurement of peak intensity also is readily done with current technology.
11. The redefinition of the white boundary toward blue was added in anticipation of a change to the SAE J%&* specification to harmonize color boundaries with the ECE standard.
12. New markings for selective coverage devices were added to provide a marking distinction between omnidirectional devices and devices with selective coverage.

SAE J595:

Full SAE Standard available at: http://standards.sae.org/j595_200811