6200000 GROUNDING AND LIGHTNING PROTECTION
COMMENTS FROM INTERNAL/INDUSTRY REVIEW

Craig Carnes
ccarnes@metriceng.com

Comment: (12-10-13)
1. 620-2.7 - Should all SPDs be UL Listed.

Response:

2. 620-3.1, third and fourth sentences: Suggest the highlighted changes:

> *The primary ground rod assembly and electrical pull box shall be installed between 12 inches to 36 inches from the element being ground~~ing~~ed. The top of all other grounding electrode assemblies connected to the primary grounding electrode assembl~~e~~y in an array shall be buried a minimum of 18 inches below grade.*

Response: Agree. Change made

3. 620-2.3 and 620-3.4: Seems to dictate that there must be an array used which consists of more than one assembly. Is one ground rod assembly acceptable? If so, please clarify 620-2.3.

Response:

****

Al Poudrier
850-651-7295
apoudrier@co.okaloosa.fl.us

Comment: (12-12-13)
I have the following comments for:

620-3.2 Minimum Grounding Resistance:
f. Pull boxes with AC power

1. This is Ambiguous - does "AC power" refer to AC provided by the Utility Service Provider? Or any pull box with conductors carrying AC power such as signal cable that provides AC to the signal head?

Response:

2. Pull boxes (and lids) used in signal installations are typically composite / fiber material. How is a composite box (often used at the Utility Service Provider's service drop supposed to be grounded?

Response:

ALSO, the following is not part of the Grounding & Surge Specification industry review, but I will bring it up at every opportunity:
SPECIFICATIONS FOR CONSTRUCTION OF TRAFFIC SIGNALS SHOULD STATE:
NO SPLICES ARE ALLOWED IN THE SERVICE CONDUCTOR BETWEEN THE SERVICE PROVIDER'S AC DROP AND THE SERVICE DISCONNECT

Response:

****

Chester Chandler
813-615-8610
chester.chandler@dot.state.fl.us

Comment: (12-17-13)
See Chandler Attachment.

Response:

****

Adam C. Moser
615-770-8271
adam_moser@gspnet.com

Comment: (12-17-13)
See Moser Attachments 1, 2, & 3.

Response:

****

lightning control
bcook@lightningcontrol.com

Comment: (12-18-13) Thank you for the opportunity to review and comment on the revised 620 specification:

1. 620-2.7.1 SPD at Power Entry Point: Install a SPD at the closest termination/disconnection point where the supply circuit enters the ITS device cabinet. Locate the SPD on the load side of the main disconnect and ahead of any and all ITS electronic devices **and connected in parallel with the AC supply**. Configure the SPD to operate at 120 volt single phase (i.e., line, neutral and ground) or 120/240 volt single phase (line I, line 2, neutral and ground) as required to match the supply

Response:

2. 620-2.7.2 SPD at Point of Use: Install a SPD at the point the ITS devices receive 120 volt power **and connected in series with the circuits**. Ensure that these devices comply with the functional requirements shown in Table 785-1. Ensure that the units are rated at 15 or 20 amps load and are configured with receptacles.

Response:

3. 620-3.3 Grounding Traffic Control Systems at Signalized Intersections: Ensure that all separately grounded elements at an intersection (signal cabinet, power service, mast aims or strain poles, etc.) are bonded together to form an intersection grounding network array, **in accordance with NEC Article 250 "Bonding" using #6 AWG insulated green wire.**

Response:

4. 620-3.5 Grounding Highway Lighting Systems: Ground each metal light pole **and connect an earth wire back to the AC power source in accordance with NEC Article 250 "Bonding"**. For poles on bridge structures, bring the grounding conductors out to a pull box at each end of the structure and connect them to driven ground rods 20 feet in length **and the AC power source**. Ground all high mast poles in accordance with the details for grounding in the Design Standards, Index No. 17502.

Response:

5. 620-3.6.2 Exterior Grounding: Install an exterior grounding system consisting of multiple ground rods around the perimeter of the equipment shelter. to achieve the resistance to ground required in 620-3.2 Place the rods a minimum of 2 feet from the building foundation in a suitable access point. **Provide at least one ground rod in an electrical pull box so that the top 4" are accessible for inspection in accordance with 620-3.1,**

Response:

6. 620-3.6.3 Punch Block SPD Grounding: For all Type 66 punch blocks, install No. 2 AWG solid bare tinned copper wire to ground external line surge protection devices. Install the No. 2 .AWG solid bare tinned copper wire in accordance with the SPD manufacturer's recommendations and mechanically connect them to the shelter's interior perimeter ground. **Use of #2 AWG solid bare tinned copper wire for this application is impractical. This should be #6AWG multi-strand, insulated green earth wire.**

Response:

7. 620-4.2 Inspection: Move this text, Measure the resistance at each accessible ground rod using a clamp-on earth tester. The measurement at any individual rod is the cumulative resistance of all rods in a parallel circuit. to the section 620-4 Ground Resistance testing & Inspection, indicating that it is an acceptable resistance test method, where the fall-of-potential meter test probes cannot be deployed due to space constraints.

Response:

****

Lou Farquhar
800-237-4567
lfarquhar@aptsurge.com

Comment: (12-18-13)
I was forwarded a copy of the 6200000 Grounding and Lightning Protection specification. Attached are my comments. Some of them may not apply right away, but I believe that we can advance the state of the art.
See Farquhar Attachment.

Response:

****

Chandler Attachment

6200000
All Jobs

SECTION 620
~~TRAFFIC CONTROL SIGNAL AND DEVICE~~
~~INSTALLATION~~ GROUNDING ***AND LIGHTNING PROTECTION***

620-1 Description.

Furnish and install grounding and lightning protection to provide personnel and equipment protection against faults, surge currents and lightning transients. Provide a grounding and lightning protection system in accordance with the details shown in the Design Standards unless otherwise shown on the plans.~~Install grounding for traffic signal and device installations to provide personnel and equipment protection against faults, surge currents and lightning transients.~~

a

620-2 Materials.

rod

620-2.1 Ground Rods: *Use UL listed ground rods made of copper-clad steel with a nominal diameter of 5/8 inches. Ground rod sections must be a minimum of 8 feet in length and manufactured for the sole purpose of providing electrical grounding.*

620-2.2 Ground Rod Assembly: *Provide a ground rod assembly consisting of one or more ground rods coupled together, such that the total length of the assembly is a minimum of 20 feet, driven into the earth at a single point, without disrupting the electrical continuity of the assembly.*

620-2.3 Ground Rod Array: *Provide a ground rod array consisting of two or more ground rod assemblies bonded together and spaced a minimum of 40 feet apart.*

620-2.4 Grounding Conductors: *Use solid copper insulated (green) conductor for electrical or lightning protection ground from the system ground bus or barrier plates to the ground~~ing electrode~~ assembly. Use either solid or stranded copper insulated (green) conductor for all ground connections. Equipment grounding conductors shall be sized according to the NEC section 250.122. Grounding ~~electrode~~ conductors shall be sized according to the NEC section 250.66 (A) through (C). Ground Ring grounding conductors shall be sized according to the NEC section 250.52 (A). (4). Lightning protection main conductors shall be #2 AWG from the air terminals to the ground rod.*

primary

confusing, rewrite?

620-2.5 Exothermic Grounding Bond: *Make all connections to the ~~grounding electrode~~ using exothermic welds.*

620-2.6 Air Terminals: *Use UL listed air terminals.*

620-2.7 Surge Protective Devices: *Provide Surge Protective Devices (SPDs) to protect electronics from lightning, transient voltage surges, and induced current.*

Install SPDs on all power, data, video and any other conductive circuit. SPD requirements for lighting must meet the minimum requirements of Section 992 and the Design Standards. SPDs for traffic control devices, including ITS equipment, must be listed on the Department's Approved Product List (APL).

Provide primary and secondary surge protection on AC power at traffic control device field sites.

primary

620-2.7.1 SPD at Power Entry Point: *Install a SPD at the closest termination/disconnection point where the supply circuit enters the ITS device cabinet. Locate the SPD on the load side of the main disconnect and ahead of any and all ITS electronic devices. Configure the SPD to operate at 120 volt single phase (i.e., line, neutral and ground) or 120/240 volt single phase (line 1, line 2, neutral and ground) as required to match the supply*

ground rod assemblies

or ground rod arrays

minimum

620-1

circuit configuration. Ensure that the SPD maximum surge current rating is 50 kA per phase or greater. Verify that the SPD has been labeled to indicate that the unit is UL 1449. Third Edition listed.

Ensure that the SPD has a visual indication system that monitors the weakest link in each mode and shows normal operation or failure status and also provides one set of normally open (NO)/normally closed (NC) Form C contacts for remote alarm monitoring. The enclosure for a SPD shall have a NEMA 4 rating.

Functional

620-2.7.2 SPD at Point of Use: *Install a SPD at the point the ITS devices receive 120 volt power. Ensure that these devices comply with the functional requirements shown in Table ~~7-6-1.~~ Ensure that the units are rated at 15 or 20 amps load and are configured with receptacles.*

Ensure that these units have internal fuse protection and provide common mode (L+N-G) protection.

620-2.7.3 SPD for Low-Voltage Power, Control, Data and Signal Systems: *Install a specialized SPD on all conductive circuits including, but not limited to, data communication cables, coaxial video cables, and low-voltage power cables. Ensure that these devices comply with the functional requirements shown in Table 620-1 for all available modes (i.e. power L-N, N-G; L-G, data and signal center pin-to-shield; L-L, L-G, and shield-G where appropriate).*

comma here

Table 620-1				
SPD Minimum Requirements				
Circuit Description	Clamping Voltage	Data Rate	Surge Capacity	Maximum Let-Through Voltage
12 VDC	15-20 V	N/A	5kA per mode (8x20 µs)	<150 Vpk
24 VAC	30-55 V	N/A	5kA per mode (8x20 µs)	<175 Vpk
48 VDC	60-85 V	N/A	5kA per mode (8x20 µs)	<200 Vpk
120 VAC at POU	150-200 V	N/A	20kA per mode (8x20 µs)	<550 Vpk
Coaxial Composite Video	4-8 V	N/A	10kA per mode (8x20 µs)	<65 Vpk (8x20 µs/1.2x50µs; 6kV, 3kA)
RS422/RS485	8-15 V	Up to 10 Mbps	10kA per mode (8x20 µs)	<30 Vpk
T1	13-30 V	Up to 10 Mbps	10kA per mode (8x20 µs)	<30 Vpk
Ethernet Data	7-12 V	Up to 1 Gbps	1kA per mode (10x1000 µs)	<30 Vpk

Formatted Table

Formatted Table

Ensure that SPDs are listed and meet the requirements of UL 497B or UL 497C, as applicable.

Provide line space here

S

620-2.7.4 Mechanical Specifications: *Ensure equipment is permanently marked with manufacturer name or trademark, part number, and date of manufacture or serial number.*

All parts must be made of corrosion-resistant materials, such as plastic, stainless steel, anodized aluminum, brass, or gold-plated metal.

620-2.7.5 Environmental Specifications: *Ensure that SPDs operate properly during and after being subjected to the temperature and humidity test profiles described in NEMA TS 2, Section 2.2.7, and the vibration and shock tests described in NEMA TS 2, Sections 2.2.8., and 2.2.9.*

620-2.7.6 Manufacturer's Warranty: *Ensure that the SPD has a manufacturer's warranty covering failures for a minimum of 10 years from the date of final acceptance by the Engineer in accordance with 5-11 and Section 608.*

The term "failure" for warranty replacement is defined as follows:

Parallel-connected, power-rated SPD units are considered in failure mode when any of the visual indicators shows failure mode when power is applied to the terminals at the unit's rated voltage, or the properly functioning over-current protective device will not reset after tripping.

Series-connected, low-voltage power, data, or signal units are considered in the failure mode when an open circuit condition is created and no data/signal will pass through the SPD device or a signal lead is permanently connected to ground.

In the event that the SPD, including any component of the unit, should fail during the warranty period, the entire SPD shall be replaced by the manufacturer at no cost to the Department or maintaining agency.

~~Use ground rods made of copper-clad steel with a minimum diameter of 5/8 inches. Ground rod sections must be a minimum of 8 feet in length and manufactured for the sole purpose of providing electrical grounding.~~

~~**620-2.2 Grounding Conductors:** Use solid No. 6 AWG copper insulated (green) conductor for electrical or lightning protection ground from the system ground bus or barrier plates to the grounding electrode assembly. Use either solid or stranded No. 6 AWG copper insulated (green) conductor for all ground connections.~~

~~**620-2.3 Exothermic Grounding Bond:** Use materials from the same source, meeting the requirements of the Institute of Electrical and Electronics Engineers Standards 80 and 837.~~

~~**620-2.4 Ground Rod Coupling Devices:** Use a coupling device for grounding electrode to grounding electrode connections approved by the Engineer.~~

rod assembly

Formatted: Body Text

620-3 ***Installation*** ~~**Requirements for Grounding.**~~

rod

Formatted: Indent: First line: 0"

620-3.1 General: *Construct a single-point grounding system. Install the primary ground rod assembly in an electrical pull box so that the top four inches are accessible for inspection, resistance testing, and maintenance. The primary ground rod assembly and electrical pull box shall be installed between 12 inches to 36 inches from the element being grounding. The top of all other grounding electrode assemblies connected to the primary grounding electrode assemble in an array shall be buried a minimum of 18 inches below grade. Direct bury grounding conductors used to connect ground rod assemblies a minimum of 18 inches below finished grade.*

Bond all ground rod assemblies and arrays together with solid bare tinned copper wire unless otherwise shown on the plans. Install grounding conductors in a straight path.

Make all bonds between ground wires and ground rod assemblies and arrays with an exothermic bond with the following exception: do not exothermically bond sections of ground

is this redundant or in conflict with subarticle 620-2.4 ?

a ground rod

ground rod

exothermically

rods to create the ground rod assembly and do not ~~use exothermic~~ bond connections within a cabinet. Apply an anti-oxidant compound to all mechanical connections.

Connect primary surge protection for power at the service entrance or main disconnect. Connect secondary surge protection at point of use. unless otherwise shown in the plans.

Ensure that lightning protection systems conform to the requirements of NFPA 780. Standard for the Installation of Lightning Protection Systems. Install SPDs that have an operating voltage appropriate for the characteristics of the circuits they protect. ~~Meet all local electrical codes which exceed these Specifications. Install all grounding conductors, which bond grounding electrode assemblies, 18 inches below finished grade. Accomplish grounding for any element of a traffic control signal and device installation by installing either a grounding electrode assembly or a grounding electrode array, unless otherwise specified in the Contract Documents.~~

~~Bond all grounding electrode assemblies and arrays together and place in a location that minimizes the length of the grounding conductor between the assembly or array and the element being grounded.~~

??

620-3.2 ***Minimum Grounding Resistance:*** *Obtain a resistance to ground of 5 Ohms or less for each of the following elements or install multiple ground rod assemblies totaling a maximum length of 80 feet.*

So, if the contractor installs the max. 80 feet or 20 feet respectively, the contractor does not have to perform a ground resistance measurement. Do we want this option to be available? No!?

a. Power service for traffic control devices
b. Signal and ITS cabinets
c. ITS Poles/Structures with electronic equipment
d. Electronic equipment
e. DMS and DMS structures
f. Equipment Shelters and fencing
g. Communication Towers

Obtain a resistance to ground of 25 Ohms or less for each of the following elements or install multiple ground rod assemblies totaling a maximum length of 20 feet.

a. Conventional lighting
b. External lighting for signs
c. Signal cable & span wire
d. Aerial interconnect messenger wire
e. Pedestals for pedestrian signals
f. Pull boxes with AC power
g. Splice vaults with wire grounding units

??

Line space here

Install a minimum of one ground rod assembly as a primary ground rod. If a grounding and lightning protection system using a single ground rod assembly does not achieve the required resistance to ground, extend the length of the ground rod assembly an additional 20 feet or install an additional ground rod assembly 40 feet away and connect it to the main ground rod assembly to create a ground rod array. Continue installing ground rod assemblies connected in an array until the required resistance is obtained or until the maximum required total length of ground rod is installed.

Grounding systems formed from horizontally constructed conductive radials are permitted if site conditions prohibit the use of vertically driven rods as permitted by the NEC Article 250.53(G). A grounding system consisting of the maximum total length of ground rod required is acceptable in cases where soil conditions prevent the grounding system from

Formatted: Default

primary assembly primary assemblies assemblies

to ground

achieving the required resistance to ground. Submit the site resistance measurement to the Engineer. ~~Install 40 feet of ground assembly or array for each of the following elements:~~

~~(a) Electric power service~~
~~(b) Pole with electrical power service installed~~
~~(c) Pole mounted cabinet with electrical power service installed~~
~~(d) Controller or detector cabinet~~

~~Install 20 feet of ground assembly or array for each of the following elements:~~

~~(a) Pole~~
~~(b) Pedestals for pedestrian signals~~
~~(c) Metal cover used with pull boxes with AC power~~

~~Ensure that all separately grounded elements at an intersection are bonded together to form an intersection grounding network.~~

~~For span wire assemblies, use the span wire to connect the grounding electrode assemblies or arrays of the poles.~~

~~Do not install a grounding electrode assembly or array for a base mounted cabinet within 6 feet of a grounding electrode assembly or array installed for a pole.~~

~~Make all bonds between ground wires and grounding electrode assemblies or arrays with an exothermic bond with the following exception: do not exothermically bond grounding electrode to grounding electrode connections or the system ground bussbar or barrier plate connections located within a cabinet.~~

~~**620-3.2 Grounding Electrode Assembly:** Provide a grounding electrode assembly consisting of one or more grounding electrodes coupled together, such that the total length of the electrodes in the assembly is a minimum of 20 feet, driven into the earth at a single point, without disrupting the electrical continuity of the assembly.~~

~~Install the grounding electrode assembly so that the final elevation at the top is 6 inches below finished earth grade. Mark the location of the assembly with a stake and keep uncovered until the Engineer performs a final inspection of the installation.~~

~~**620-3.3 Grounding Electrode Array:** Provide a grounding electrode array consisting of two or more grounding electrode assemblies, bonded together and spaced a minimum of 6 feet apart.~~

~~**620-3.4 Grounding Poles:** Ground all poles, including pedestals for pedestrian signals, in accordance with the details for grounding and connections shown in the Design Standards.~~

~~For non-metallic traffic signal poles, including pedestals for pedestrian signals, accommodate the ground connection from signal heads and span wires to the ground electrode assembly or array located at the pole base in accordance with the details in the Design Standards, Index No. 17727.~~

~~When erecting new metal poles within 10 feet of existing metal poles or structures, bond the new and existing poles or structures together.~~

~~**620-3.5 Grounding Electric Power Service:** Ground all electric power services in accordance with the details for grounding and connections shown in the Design Standards, Index No. 17736.~~

~~**620-3.6 Grounding Controller or Detector Cabinets:** Ground controller or detector cabinets to the bussbar located in the cabinet. Place the grounding electrode assembly or array as close to the cabinet as possible.~~

~~**620-3.7 Grounding Span Wire Mounted Signal Heads and Electrically Powered Signs:** Ground span wire mounted signal heads and electrically powered signs through the span wire assembly in accordance with the details shown in the Design Standards, Index No. 17727.~~

~~Do not use guy wires for grounding purposes, however bond any guy wire to the span wire as part of the intersection grounding network.~~

620-3.3 Grounding Traffic Control Systems at Signalized Intersections: *Ensure that all separately grounded elements at an intersection (signal cabinet, power service, mast arms or strain poles, etc.) are bonded together to form an intersection grounding network array.*

For traffic signal poles, including pedestals for pedestrian signals, accommodate the ground connection from signal heads and electrically powered signs through span wires to the ground rod assembly or array located at the pole base in accordance with the details in the Design Standards.

For span wire assemblies, use the span wire to connect the ground rod assemblies or arrays of the poles. Do not use guy wires for grounding purposes, however bond any guy wire to the span wire as part of the intersection grounding network.

620-3.4 Grounding Traffic Control Systems on Highways: *Install the primary ground rod at the base of the traffic control device supporting structure. Bond all metal components of the system (such as cabinets, steel poles, and concrete pole grounding wire) to the grounding system using a mechanical connection on the equipment side and an exothermically welded connection at the down cable. Do not use split bolts for grounding system connections.*

Connect all ground rod assemblies and any associated grounded electrical system within a 100-foot radius (but not beyond the edge of the roadway) of the primary ground rod. Connect the primary ground rod to a single point main grounding bar inside the equipment cabinet or mount it to the base of the traffic control device supporting structure unless otherwise shown on the plans.

Place multiple ground rod assemblies in an array as depicted in the Design Standards unless otherwise shown on the plans. If a required array cannot be placed in the right-of-way, submit an alternate placement detail for approval.

620-3.5 Grounding Highway Lighting Systems: *Ground each metal light pole.*

For poles on bridge structures, bring the grounding conductors out to a pull box at each end of the structure and connect them to driven ground rod 20 feet in length.

Ground all high mast poles in accordance with the details for grounding in the Design Standards, Index No. 17502.

620-3.6 Grounding Equipment Shelters: *Install all grounds for the equipment shelter on the side of the building that utilities, communication cables, and fiber enter. Connect all earth grounds to this point, including the grounding system for the ~~surge protection devices~~ (SPDs). Make all connections to SPDs according to the manufacturer's recommendations.*

Ensure that communication cables, AC power, emergency generator, and equipment frames are connected by the shortest practical route to the grounding system. Protect the lead lengths from each device to the SPD.

Use compression type connection for all interior connections to bond ground conductors to equipment in the shelter. For connections to bus bars, use mechanical connections having two bolts on a double-lug connector. Install star washers, or another means that accommodates the fasteners used and to achieves reliable electrical connections that will not deteriorate. Crimp and solder all wires connected to lugs or clamps. Verify electrical continuity of all connections. Remove all non-conducting surface coatings before each connection is made.

it

array

ground rod

assembly

assembly.

ground rod

minimum

assemblies

So, how many interior perimeter grounds are there? 2. 3 or more

So, is there a lower interior perimeter ground?

is there a mid-height interior perimeter ground?

ing

grounding

6200000
All Jobs

Ensure that ground conductors are downward coursing, vertical, and as short and straight as possible. Ensure that the minimum bending radius for interior equipment shelter grounds is 8 inches. Avoid sharp bends and multiple bends in conductors.

620-3.6.1 Interior Grounding: *Install a No. 2 AWG solid bare copper wire approximately 1 foot below the ceiling on each wall and mount it using insulated standoffs. Ensure that the wire encircles the equipment room, forming a ring or continuous loop along the upper interior perimeter ground, and includes the wall area above the door. Mechanically connect the cable trays to the upper interior perimeter ground using stranded copper wires with green insulation and bolted terminal connectors at the cable tray ends. Make all points where cable tray sections meet electrically continuous by use of a short jumper wire with terminals attached at each end.*

What size?

assemblies

Directly bond all other metallic objects, such as door frames and doors, air conditioners, alarm systems, wall-mounted communication equipment, etc., to the closest interior perimeter ground with the shortest possible stranded copper wire with green insulation. Bond the door to the doorframe using flexible welding cable.

620-3.6.2 Exterior Grounding: *Install an ~~exterior~~ grounding system consisting of multiple ground rod assemblies around the perimeter of the equipment shelter, to achieve the resistance to ground required in 620-3.2 Place the rods a minimum of 2 feet from the building foundation in a suitable access point. Bond the following items to the shelter's grounding system using No. 2 AWG solid bare tinned copper wire:*

exterior

1. Metal building parts not grounded by the internal grounding rings such as downspouts and siding.

assemblies

2. Ground rod assemblies provided by power or telephone utilities for grounding of AC power or surge protection devices, as permitted by local codes.

3. Shelter support skids, bases, or foundations, if applicable.

4. Any metal object larger than 4 square feet.

5. External metal fencing.

What does this term mean? Is this supposed to be "interior perimeter ground"?

ground rod assemblies

620-3.6.3 Punch Block SPD Grounding: *For all Type 66 punch blocks, install No. 2 AWG solid bare tinned copper wire to ground external line surge protection devices. Install the No. 2 AWG solid bare tinned copper wire in accordance with the SPD manufacturer's recommendations and mechanically connect them to the shelter's interior perimeter ground.*

620-3.6.4. Equipment Shelter Fence Grounding: *Ensure that the metal Type B fence is grounded to fence perimeter ground wires consisting of No. 2 AWG solid bare tinned copper wires that encircle the entire compound to achieve required resistance to ground required in 620-3.2.*

Exothermically bond any splices in the ground wire. Bury the fence perimeter ground wire a minimum of 2.5 feet below finished grade. Bond all fence posts to the fence perimeter ground wire using No. 2 AWG solid bare tinned copper wire. Bond the gate and gatepost together with a flexible ground, such as welding cable wires. Ground the gatepost to the fence perimeter ground wire using No. 2 AWG solid bare tinned copper wire. Exothermically bond all connections to the fence perimeter ground wire.

What size?

Connect the fence's top rail to each corner post and in the middle of each side. Ground the fence fabric with No. 2 AWG solid bare tinned copper wire connected to the fence posts. Connect the fence perimeter wires to the ground rod of the equipment shelter's ground system with No. 2 AWG solid bare tinned copper wire, as shown in the plans.

ing

grounding conductor

grounding conductors

assemblies

above ground

Ensure that all ground leads are No. 2 AWG solid bare tinned copper wires for all above- and underground grounding wire installations. Ensure that all exothermic bonds are appropriate for the application. Do not use welding or other forms of bonding without prior written approval.

Note: IEEE Standard 81 requires the "full" fall-of-potential method.

620-4 Ground Resistance Testing and Inspection.

620-4.1 Testing: *Measure the ground resistance with an instrument designed specifically to measure and document earth/ground resistance, soil resistivity, and current flow. Conduct the test by using the fall-of-potential method as described in the IEEE Standard 81. Provide the Engineer with written, certified test results for each testing location. Illegible hand-written results are not acceptable. Provide the following information on the test results:*

1. The formal name or ID for the location where the test was performed

2. The GPS latitude and longitude for the location where the test was performed

3. The date on which the test was performed

4. The make and model number, serial number, and last date of calibration (by an independent testing facility within the previous 12 months) for the grounding resistance testing device used

5. Contact information (including name, signature, and employer name) for each person conducting, witnessing, or certifying the test

6. Description of the local environmental and soil conditions at the time of testing

7. A rough sketch of the site grounding system; along with the corresponding measured data points

8. Page numbering showing the current page number and total page count (e.g., Page 1 of 3)

620-4.2 Inspection: *Do not backfill below-grade grounding installations and grounding connections until inspected and approved. The Engineer will inspect the installation for proper connection types, tightness, workmanship, and conformance to plans. Replace any exothermic bonds that are deemed unsatisfactory with new exothermic bonds. Repair or replace any mechanical connections that are deemed unsatisfactory. Measure the resistance at each accessible ground rod using a clamp-on earth tester. The measurement at any individual rod is the cumulative resistance of all rods in a parallel circuit.*

For grounding system inspections, notify the Engineer at least five days prior to completion of the installation. Record all test results in a standardized format approved by the Engineer prior to testing. All recorded test report data shall be dated, witnessed, and signed by at least one representative of the Department and the Contractor. Remedy all deficiencies at no cost to the Department.

Formatted: Body Text, Indent: First line: 0", Tab stops: Not at 0.75"

620-4 Basis of Payment.

The work specified in this Section will not be paid for directly, but will be considered as incidental work.

Moser Attachment 1

12/17/13
Tuesday P.m.
Greg —
okay to send.
Chuck

Florida Department of Transportation

RICK SCOTT
GOVERNOR

605 Suwannee Street
Tallahassee, FL 32399-0450

ANANTH PRASAD, P.E.
SECRETARY

MEMORANDUM

DATE: November 25, 2013

TO: Specification Review Distribution List

FROM: Daniel Scheer, P.E., State Specifications Engineer

SUBJECT: Proposed Specification: **6200000 Grounding and Lightning Protection.**

In accordance with Specification Development Procedures, we are sending you a copy of a proposed specification change.

This change was proposed by Jeff Morgan to consolidate requirements for grounding and lightning protection into one Section.

Please share this proposal with others within your responsibility. Review comments are due within four weeks and should be sent to Mail Station 75 or to my attention via e-mail at SP965DS, or daniel.scheer@dot.state.fl.us. Comments received after **December 19, 2013,** may not be considered. Your input is encouraged.

DS/cah
Attachment

SECTION 620
~~TRAFFIC CONTROL SIGNAL AND DEVICE INSTALLATION~~ GROUNDING *AND LIGHTNING PROTECTION*

620-1 Description.

Furnish and install grounding and lightning protection to provide personnel and equipment protection against faults, surge currents and lightning transients. Provide a grounding and lightning protection system in accordance with the details shown in the Design Standards unless otherwise shown on the plans.~~Install grounding for traffic signal and device installations to provide personnel and equipment protection against faults, surge currents and lightning transients.~~

620-2 Materials.

620-2.1 Ground Rods: *Use UL listed ground rods made of copper-clad steel with a nominal diameter of 5/8 inches. Ground rod sections must be a minimum of 8 feet in length and manufactured for the sole purpose of providing electrical grounding.*

620-2.2 Ground Rod Assembly: *Provide a ground rod assembly consisting of one or more ground rods coupled together, such that the total length of the assembly is a minimum of 20 feet, driven into the earth at a single point, without disrupting the electrical continuity of the assembly.*

620-2.3 Ground Rod Array: *Provide a ground rod array consisting of two or more ground rod assemblies, bonded together and spaced a minimum of 40 feet apart.* QUESTION: DO WE WANT TO REFERENCE 620.1 IF SPECIAL DESIGN IS REQUIRE

620-2.4 Grounding Conductors: *Use solid copper insulated (green) conductor for electrical or lightning protection ground from the system ground bus or barrier plates to the grounding electrode assembly. Use either solid or stranded copper insulated (green) conductor for all ground connections. Equipment grounding conductors shall be sized according to the NEC section 250.122. Grounding electrode conductors shall be sized according to the NEC section 250.66 (A) through (C). Ground Ring grounding conductors shall be sized according to the NEC section 250.52 (A). (4). Lightning protection main conductors shall be #2 AWG from the air terminals to the ground rods.* SOLID OR STRANDED?

620-2.5 Exothermic Grounding Bond: *Make all connections to the grounding electrode using exothermic welds.*

620-2.6 Air Terminals: *Use UL listed air terminals.* W/ TERMINAL SUPPORTS AND POLE ATTACHMENT

620-2.7 Surge Protective Devices: *Provide Surge Protective Devices (SPDs) to protect electronics from lightning, transient voltage surges, and induced current.*

Install SPDs on all power, data, video and any other conductive circuit. SPD requirements for lighting must meet the minimum requirements of Section 992 and the Design Standards. SPDs for traffic control devices, including ITS equipment, must be listed on the Department's Approved Product List (APL). ON BOTH SIDES OF DISCONNECTION POINT AND ITS

Provide primary and secondary surge protection on AC power at traffic control device field sites.

620-2.7.1 SPD at Power Entry Point: *Install a SPD at the closest termination/disconnection point where the supply circuit enters the ITS device cabinet. Locate the SPD ~~on the load side of the main disconnect and ahead of any and~~ all ITS electronic devices.* ON BOTH SIDES OF DISCONNECTION POINTS *Configure the SPD to operate at 120 volt single phase (i.e., line, neutral and ground) or 120/240 volt single phase (line 1, line 2, neutral and ground) as required to match the supply*

circuit configuration. Ensure that the SPD maximum surge current rating is 50 kA per phase or greater. Verify that the SPD has been labeled to indicate that the unit is UL 1449. Third Edition listed.

Ensure that the SPD has a visual indication system that monitors the weakest link in each mode and shows normal operation or failure status and also provides one set of normally open (NO)/normally closed (NC) Form C contacts for remote alarm monitoring. The enclosure for a SPD shall have a NEMA 4 rating.

620-2.7.2 SPD at Point of Use: *Install a SPD at the point the ITS devices receive 120 volt power. Ensure that these devices comply with the functional requirements shown in Table 785-1. Ensure that the units are rated at 15 or 20 amps load and are configured with receptacles.* AND INSTALLATION DETAIL(S)

Ensure that these units have internal fuse protection and provide common mode (L+N-G) protection.

620-2.7.3 SPD for Low-Voltage Power, Control, Data and Signal Systems: *Install a specialized SPD on all conductive circuits including, but not limited to, data communication cables, coaxial video cables, and low-voltage power cables. Ensure that these devices comply with the functional requirements shown in Table 620-1 for all available modes (i.e. power L-N, N-G; L-G, data and signal center pin-to-shield, L-L, L-G, and shield-G where appropriate).*

Table 620-1

SPD Minimum Requirements

Circuit Description	*Clamping Voltage*	*Data Rate*	*Surge Capacity*	*Maximum Let-Through Voltage*
12 VDC	*15-20 V*	*N/A*	*5kA per mode (8x20 µs)*	*<150 Vpk*
24 VAC	*30-55 V*	*N/A*	*5kA per mode (8x20 µs)*	*<175 Vpk*
48 VDC	*60-85 V*	*N/A*	*5kA per mode (8x20 µs)*	*<200 Vpk*
120 VAC at POU	*150-200 V*	*N/A*	*20kA per mode (8x20 µs)*	*<550 Vpk*
Coaxial Composite Video	*4-8 V*	*N/A*	*10kA per mode (8x20 µs)*	*<65 Vpk (8x20 µs/1.2x50µs; 6kV, 3kA)*
RS422/RS485	*8-15 V*	*Up to 10 Mbps*	*10kA per mode (8x20 µs)*	*<30 Vpk*
T1	*13-30 V*	*Up to 10 Mbps*	*10kA per mode (8x20 µs)*	*<30 Vpk*
Ethernet Data	*7-12 V*	*Up to 1 Gbps*	*1kA per mode (10x1000 µs)*	*<30 Vpk*

Formatted Table

Formatted Table

Ensure that SPDs are listed and meet the requirements of UL 497B or UL 497C, as applicable.

620-2.7.4 Mechanical Specifications: *Ensure equipment is permanently marked with manufacturer name or trademark, part number, and date of manufacture or serial number.*

All parts must be made of corrosion-resistant materials, such as plastic, stainless steel, anodized aluminum, brass, or gold-plated metal.

620-2.7.5 Environmental Specifications: *Ensure that SPDs operate properly during and after being subjected to the temperature and humidity test profile described in NEMA TS 2, Section 2.2.7, and the vibration and shock tests described in NEMA TS 2, Sections 2.2.8., and 2.2.9.*

620-2.7.6 Manufacturer's Warranty: *Ensure that the SPD has a manufacturer's warranty covering failures for a minimum of 10 years from the date of final acceptance by the Engineer in accordance with 5-11 and Section 608.*

The term "failure" for warranty replacement is defined as follows:

Parallel-connected, power-rated SPD units are considered in failure mode when any of the visual indicators shows failure mode when power is applied to the terminals at the unit's rated voltage, or the properly functioning over-current protective device will not reset after tripping.

Series-connected, low-voltage power, data, or signal units are considered in the failure mode when an open circuit condition is created and no data/signal will pass through the SPD device or a signal lead is permanently connected to ground.

In the event that the SPD, including any component of the unit, should fail during the warranty period, the entire SPD shall be replaced by the manufacturer at no cost to the Department or maintaining agency.

~~Use ground rods made of copper-clad steel with a minimum diameter of 5/8 inches. Ground rod sections must be a minimum of 8 feet in length and manufactured for the sole purpose of providing electrical grounding.~~

~~**620-2.2 Grounding Conductors:** Use solid No. 6 AWG copper insulated (green) conductor for electrical or lightning protection ground from the system ground bus or barrier plates to the grounding electrode assembly. Use either solid or stranded No. 6 AWG copper insulated (green) conductor for all ground connections.~~

~~**620-2.3 Exothermic Grounding Bond:** Use materials from the same source, meeting the requirements of the Institute of Electrical and Electronics Engineers Standards 80 and 837.~~

~~**620-2.4 Ground Rod Coupling Devices:** Use a coupling device for grounding electrode to grounding electrode connections approved by the Engineer.~~

Formatted: Body Text

620-3 ***Installation*** ~~**Requirements for Grounding.**~~

Formatted: Indent: First line: 0"

620-3.1 General: *Construct a single-point grounding system. Install the primary ground rod assembly in an electrical pull box so that the top four inches are accessible for inspection, resistance testing, and maintenance. The primary ground rod assembly and electrical pull box shall be installed between 12 inches to 36 inches from the element being grounding. The top of all other grounding electrode assemblies connected to the primary grounding electrode assemble in an array shall be buried a minimum of 18 inches below grade. Direct bury grounding conductors used to connect ground rod assemblies a minimum of 18 inches below finished grade.*

NEW SENTENCE: PLACE LOCATE TAPE 1' ABOVE PLACED GND. WIRE.

Bond all ground rod assemblies and arrays together with solid bare tinned copper wire unless otherwise shown on the plans. Install grounding conductors in a straight path.

Make all bonds between ground wires and ground rod assemblies and arrays with an exothermic bond with the following exception: do not exothermically bond sections of ground

rods to create the ground rod assembly and do not use exothermic bonds on connections within a cabinet. Apply an anti-oxidant compound to all mechanical connections.

Connect primary surge protection for power at the service entrance or main disconnect. Connect secondary surge protection at point of use, unless otherwise shown in the plans.

Ensure that lightning protection systems conform to the requirements of NFPA 780, Standard for the Installation of Lightning Protection Systems. Install SPDs that have an operating voltage appropriate for the characteristics of the circuits they protect. ~~Meet all local electrical codes which exceed these Specifications. Install all grounding conductors, which bond grounding electrode assemblies, 18 inches below finished grade. Accomplish grounding for any element of a traffic control signal and device installation by installing either a grounding electrode assembly or a grounding electrode array, unless otherwise specified in the Contract Documents.~~

~~Bond all grounding electrode assemblies and arrays together and place in a location that minimizes the length of the grounding conductor between the assembly or array and the element being grounded.~~

620-3.2 Minimum Grounding Resistance: *Obtain a resistance to ground of 5 Ohms or less for each of the following elements or install multiple ground rod assemblies totaling a maximum length of 80 feet.*

a. Power service for traffic control devices
b. Signal and ITS cabinets
c. ITS Poles/Structures with electronic equipment
d. Electronic equipment
e. DMS and DMS structures
f. Equipment Shelters and fencing
g. Communication Towers

H. HAR
I. RWIS
J. MVDS

ADMS

Obtain a resistance to ground of 25 Ohms or less for each of the following elements or install multiple ground rod assemblies totaling a maximum length of 20 feet.

a. Conventional lighting
b. External lighting for signs
c. Signal cable & span wire
d. Aerial interconnect messenger wire
e. Pedestals for pedestrian signals
f. Pull boxes with AC power
g. Splice vaults with wire grounding units

Install a minimum of one ground rod assembly as a primary ground rod. If a grounding and lightning protection system using a single ground rod assembly does not achieve the required resistance to ground, extend the length of the ground rod assembly an additional 20 feet or install an additional ground rod assembly 40 feet away and connect it to the main ground rod assembly to create a ground rod array. Continue installing ground rod assemblies connected in an array until the required resistance is obtained or until the maximum required total length of ground rod is installed.

Grounding systems formed from horizontally constructed conductive radials are permitted if site conditions prohibit the use of vertically driven rods as permitted by the NEC Article 250.53(G). A grounding system consisting of the maximum total length of ground rod required is acceptable in cases where soil conditions prevent the grounding system from

Formatted: Default

QUESTION: ON ARTERIAL/URBAN CLASSIFICATION. THE ROW ALSO IS POPULATED WITH LOCAL UTILITY GROUNDING. FOR BONDING AND GROUND CONTINUITY, SHOULD GROUND ARRAYS AND UTILITY GROUNDING BE CONNECTED TO MINIMIZE THE CANCELING OUT OF THE NEW GROUNDS?

achieving the required resistance to ground. Submit the site resistance measurement to the Engineer. ~~Install 40 feet of ground assembly or array for each of the following elements:~~

~~(a) Electric power service~~

~~(b) Pole with electrical power service installed~~

~~(c) Pole mounted cabinet with electrical power service installed~~

~~(d) Controller or detector cabinet~~

~~Install 20 feet of ground assembly or array for each of the following elements:~~

~~(a) Pole~~

~~(b) Pedestals for pedestrian signals~~

~~(c) Metal cover used with pull boxes with AC power~~

~~Ensure that all separately grounded elements at an intersection are bonded together to form an intersection grounding network.~~

~~For span wire assemblies, use the span wire to connect the grounding electrode assemblies or arrays of the poles.~~

~~Do not install a grounding electrode assembly or array for a base mounted cabinet within 6 feet of a grounding electrode assembly or array installed for a pole.~~

~~Make all bonds between ground wires and grounding electrode assemblies or arrays with an exothermic bond with the following exception: do not exothermically bond grounding electrode to grounding electrode connections or the system ground bussbar or barrier plate connections located within a cabinet.~~

~~**620-3.2 Grounding Electrode Assembly:** Provide a grounding electrode assembly consisting of one or more grounding electrodes coupled together, such that the total length of the electrodes in the assembly is a minimum of 20 feet, driven into the earth at a single point, without disrupting the electrical continuity of the assembly.~~

~~Install the grounding electrode assembly so that the final elevation at the top is 6 inches below finished earth grade. Mark the location of the assembly with a stake and keep uncovered until the Engineer performs a final inspection of the installation.~~

~~**620-3.3 Grounding Electrode Array:** Provide a grounding electrode array consisting of two or more grounding electrode assemblies, bonded together and spaced a minimum of 6 feet apart.~~

~~**620-3.4 Grounding Poles:** Ground all poles, including pedestals for pedestrian signals, in accordance with the details for grounding and connections shown in the Design Standards.~~

~~For non-metallic traffic signal poles, including pedestals for pedestrian signals, accommodate the ground connection from signal heads and span wires to the ground electrode assembly or array located at the pole base in accordance with the details in the Design Standards, Index No. 17727.~~

~~When erecting new metal poles within 10 feet of existing metal poles or structures, bond the new and existing poles or structures together.~~

~~**620-3.5 Grounding Electric Power Service:** Ground all electric power services in accordance with the details for grounding and connections shown in the Design Standards, Index No. 17736.~~

~~**620-3.6 Grounding Controller or Detector Cabinets:** Ground controller or detector cabinets to the bussbar located in the cabinet. Place the grounding electrode assembly or array as close to the cabinet as possible.~~

~~**620-3.7 Grounding Span-Wire Mounted Signal Heads and Electrically Powered Signs:** Ground span-wire mounted signal heads and electrically powered signs through the span wire assembly in accordance with the details shown in the Design Standards, Index No. 17727. Do not use guy wires for grounding purposes, however bond any guy wire to the span wire as part of the intersection grounding network.~~

620-3.3 Grounding Traffic Control Systems at Signalized Intersections: *Ensure that all separately grounded elements at an intersection (signal cabinet, power service, mast arms or strain poles, etc.) are bonded together to form an intersection grounding ~~network array~~.* COMMON BOND

For traffic signal poles, including pedestals for pedestrian signals, accommodate the ground connection from signal heads and electrically powered signs through span wires to the ground rod assembly or array located at the pole base in accordance with the details in the Design Standards.

For span wire assemblies, use the span wire to connect the ground rod assemblies or arrays of the poles. Do not use guy wires for grounding purposes, however bond any guy wire to the span wire as part of the intersection grounding network.

620-3.4 Grounding Traffic Control Systems on Highways: *Install the primary ground rod at the base of the traffic control device supporting structure. Bond all metal components of the system (such as cabinets, steel poles, and concrete pole grounding wire) to the grounding system using a mechanical connection on the equipment side and an exothermically welded connection at the down cable. Do not use split bolts for grounding system connections.*

Connect all ground rod assemblies and any associated grounded electrical system within a 100-foot radius (but not beyond the edge of the roadway) of the primary ground rod. Connect the primary ground rod to a single point main grounding bar inside the equipment cabinet or mounted to the base of the traffic control device supporting structure unless otherwise shown on the plans.

Place multiple grounding rod assemblies in an array as depicted in the Design Standards unless otherwise shown on the plans. If a required array cannot be placed in the right-of-way, submit an alternate placement detail for approval.

620-3.5 Grounding Highway Lighting Systems: *Ground each metal light pole.*

For poles on bridge structures, bring the grounding conductors out to a pull box at each end of the structure and connect them to driven ground rods 20 feet in length.

Ground all high mast poles in accordance with the details for grounding in the Design Standards, Index No. 17502.

620-3.6 Grounding Equipment Shelters: *Install all grounds for the equipment shelter on the side of the building that utilities, communication cables, and fiber enter. Connect all earth grounds to this point, including the grounding system for the surge protection devices (SPDs). Make all connections to SPDs according to the manufacturer's recommendations.*

Ensure that communication cables, AC power, emergency generator, and equipment frames are connected by the shortest practical route to the grounding system. Protect the lead lengths from each device to the SPD.

Use compression type connection for all interior connections to bond ground conductors to equipment in the shelter. For connections to bus bars, use mechanical connections having two bolts on a double-lug connector. Install star washers, or another means that accommodates the fasteners used and to achieves reliable electrical connections that will not deteriorate. Crimp and solder all wires connected to lugs or clamps. Verify electrical continuity of all connections. Remove all non-conducting surface coatings before each connection is made.

Ensure that ground conductors are downward coursing, vertical, and as short and straight as possible. Ensure that the minimum bending radius for interior equipment shelter grounds is 8 inches. Avoid sharp bends and multiple bends in conductors.

620-3.6.1 Interior Grounding: *Install a No. 2 AWG solid bare copper wire approximately 1 foot below the ceiling on each wall and mount it using insulated standoffs. Ensure that the wire encircles the equipment room, forming a ring or continuous loop along the upper interior perimeter ground, and includes the wall area above the door. Mechanically connect the cable trays to the upper interior perimeter ground using stranded copper wires with green insulation and bolted terminal connectors at the cable tray ends. Make all points where cable tray sections meet electrically continuous by use of a short jumper wire with terminals attached at each end.*

? SOLID AND STRANDED GROUND WIRE APPEAR INCONSISTANT ?

?

Directly bond all other metallic objects, such as door frames and doors, air conditioners, alarm systems, wall-mounted communication equipment, etc., to the closest interior perimeter ground with the shortest possible stranded copper wire with green insulation. Bond the door to the doorframe using flexible welding cable.

?

OR BUS BAR — ***620-3.6.2 Exterior Grounding:*** *Install an exterior grounding system consisting of multiple ground rods around the perimeter of the equipment shelter, to achieve the resistance to ground required in 620-3.2 Place the rods a minimum of 2 feet from the building foundation in a suitable access point. Bond the following items to the shelter's grounding system using No. 2 AWG solid bare tinned copper wire:*

1. Metal building parts not grounded by the internal grounding rings, such as downspouts and siding.

2. Ground rods provided by power or telephone utilities for grounding of AC power or surge protection devices, as permitted by local codes.

3. Shelter support skids, bases, or foundations, if applicable.

4. Any metal object larger than 4 square feet.

5. External metal fencing.

620-3.6.3 Punch Block SPD Grounding: *For all Type 66 punch blocks, install No. 2 AWG solid bare tinned copper wire to ground external line surge protection devices. Install the No. 2 AWG solid bare tinned copper wire in accordance with the SPD manufacturer's recommendations and mechanically connect them to the shelter's interior perimeter ground.*

620-3.6.4. Equipment Shelter Fence Grounding: *Ensure that the metal Type B fence is grounded to fence perimeter ground wires consisting of No. 2 AWG solid bare tinned copper wires that encircle the entire compound to achieve required resistance to ground required in 620-3.2.*

Exothermically bond any splices in the ground wire. Bury the fence perimeter ground wire a minimum of 2.5 feet below finished grade. Bond all fence posts to the fence perimeter ground wire using No. 2 AWG solid bare tinned copper wire. Bond the gate and gatepost together with a flexible ground, such as welding cable wires. Ground the gatepost to the fence perimeter ground wire using No. 2 AWG solid bare tinned copper wire. Exothermically bond all connections to the fence perimeter ground wire.

Connect the fence's top rail to each corner post and in the middle of each side. Ground the fence fabric with No. 2 AWG solid bare tinned copper wire connected to the fence posts. Connect the fence perimeter wires to the ground rods of the equipment shelter's ground system with No. 2 AWG solid bare tinned copper wire, as shown in the plans.

Ensure that all ground leads are No. 2 AWG solid bare tinned copper wires for all above- and underground grounding wire installations. Ensure that all exothermic bonds are appropriate for the application. Do not use welding or other forms of bonding without prior written approval.

620-4 Ground Resistance Testing and Inspection.

620-4.1 Testing: *Measure the ground resistance with an instrument designed specifically to measure and document earth/ground resistance, soil resistivity, and current flow. Conduct the test by using the fall-of-potential method as described in the IEEE Standard 81. Provide the Engineer with written, certified test results for each testing location. Illegible hand-written results are not acceptable. Provide the following information on the test results:*

IEEE II 81 SHOULD IDENTIFY "FULL" FALL OF POTENTIAL TEST (10 POINT)

1. The formal name or ID for the location where the test was performed

2. The GPS latitude and longitude for the location where the test was performed

3. The date on which the test was performed

4. The make and model number, serial number, and last date of calibration (by an independent testing facility within the previous 12 months) for the grounding resistance testing device used

5. Contact information (including name, signature, and employer name) for each person conducting, witnessing, or certifying the test

6. Description of the local environmental and soil conditions at the time of testing

7. A rough sketch of the site grounding system; along with the corresponding measured data points

8. Page numbering showing the current page number and total page count (e.g., Page 1 of 3)

620-4.2 Inspection: *Do not backfill below-grade grounding installations and grounding connections until inspected and approved. The Engineer will inspect the installation for proper connection types, tightness, workmanship, and conformance to plans. Replace any exothermic bonds that are deemed unsatisfactory with new exothermic bonds. Repair or replace any mechanical connections that are deemed unsatisfactory. Measure the resistance at each accessible ground rod using a clamp-on earth tester. The measurement at any individual rod is the cumulative resistance of all rods in a parallel circuit.*

For grounding system inspections, notify the Engineer at least five days prior to completion of the installation. Record all test results in a standardized format approved by the Engineer prior to testing. All recorded test report data shall be dated, witnessed, and signed by at least one representative of the Department and the Contractor. Remedy all deficiencies at no cost to the Department.

Formatted: Body Text, Indent: First line: 0", Tab stops: Not at 0.75"

620-4 Basis of Payment.

The work specified in this Section will not be paid for directly, but will be considered as incidental work.

QUESTION: ON NEW FACILITIES CALLING FOR GROUND ARRAYS. SHOULD A PRETEST BE REQUIRED WITH PREPARED DOCUMENTATION SHOWING THE GROUND POTENTIAL OF THE VIRGIN LAND?

Moser Attachment 2

Florida Department of Transportation

RICK SCOTT
GOVERNOR

605 Suwannee Street
Tallahassee, FL 32399-0450

ANANTH PRASAD, P.E.
SECRETARY

M E M O R A N D U M

DATE: November 25, 2013

TO: Specification Review Distribution List

FROM: Daniel Scheer, P.E., State Specifications Engineer

SUBJECT: Proposed Specification: **6200000 Grounding and Lightning Protection.**

In accordance with Specification Development Procedures, we are sending you a copy of a proposed specification change.

This change was proposed by Jeff Morgan to consolidate requirements for grounding and lightning protection into one Section.

Please share this proposal with others within your responsibility. Review comments are due within four weeks and should be sent to Mail Station 75 or to my attention via e-mail at SP965DS, or daniel.scheer@dot.state.fl.us. Comments received after **December 19, 2013,** may not be considered. Your input is encouraged.

DS/cah
Attachment

SECTION 620
~~TRAFFIC CONTROL SIGNAL AND DEVICE~~
~~INSTALLATION~~ GROUNDING ***AND LIGHTNING PROTECTION***

620-1 -1 Description.

Furnish and install grounding and lightning protection to provide personnel and equipment protection against faults, surge currents and lightning transients. Provide a grounding and lightning protection system in accordance with the details shown in the Design Standards unless otherwise shown on the plans.~~Install grounding for traffic signal and device installations to provide personnel and equipment protection against faults, surge currents and lightning transients.~~

620-2 -2 Materials.

620-2.1 Ground Rods: *Use UL listed ground rods made of copper-clad steel with a nominal diameter of 5/8 inches. Ground rod sections must be a minimum of 8 feet in length and manufactured for the sole purpose of providing electrical grounding.*

620-2.2 Ground Rod Assembly: *Provide a ground rod assembly consisting of one or more ground rods coupled together, such that the total length of the assembly is a minimum of 20 feet, driven into the earth at a single point, without disrupting the electrical continuity of the assembly.*

620-2.3 Ground Rod Array: *Provide a ground rod array consisting of two or more ground rod assemblies, bonded together and spaced a minimum of 40 feet apart.*

620-2.4 Grounding Conductors: *Use solid copper insulated (green) conductor for electrical or lightning protection ground from the system ground bus or barrier plates to the grounding electrode assembly. Use either solid or stranded copper insulated (green) conductor for all ground connections. Equipment grounding conductors shall be sized according to the NEC section 250.122. Grounding electrode conductors shall be sized according to the NEC section 250.66 (A) through (C). Ground Ring grounding conductors shall be sized according to the NEC section 250.52 (A), (4). Lightning protection main conductors shall be #2 AWG from the air terminals to the ground rods.*

620-2.5 Exothermic Grounding Bond: *Make all connections to the grounding electrode using exothermic welds.*

620-2.6 Air Terminals: *Use UL listed air terminals.*

620-2.7 Surge Protective Devices: *Provide Surge Protective Devices (SPDs) to protect electronics from lightning, transient voltage surges, and induced current.*

Install SPDs on all power, data, video and any other conductive circuit. SPD requirements for lighting must meet the minimum requirements of Section 992 and the Design Standards. SPDs for traffic control devices, including ITS equipment, must be listed on the Department's Approved Product List (APL).

~~Provide primary and secondary surge protection on AC power at traffic control device field sites.~~

620-2.7.1 SPD for 120V or 120/240V Power~~at Power Entry Point~~: *Install a SPD at the utility disconnect to the cabinet. Ensure that the SPD has a maximum surge current rating of 50kA per phase (sum of L-N plus L-G) or greater. Verify that the SPD has been labeled to indicate that the unit is UL 1449, Third Edition Listed.*

Install a SPD at the closest termination/disconnection point where the supply circuit enters the ~~ITS device~~ cabinet. Locate the SPD on the load side of the main disconnect and ahead of any and all ~~ITS~~ electronic devices. ~~Configure the SPD to operate at 120 volt single phase (i.e., line, neutral and ground) or 120/240 volt single phase (line 1, line 2, neutral and ground) as required to match the supply~~

~~circuit configuration.~~ *Ensure that the SPD is equipped with L-N, L-G, and N-G protection and has a maximum surge current rating of~~is~~ ~~50~~ 100 kA per phase (sum of L-N plus L-G) or greater. Verify that the SPD has been labeled to indicate that the unit is UL 1449, Third Edition listed.*

Install a SPD at the equipment's power connection terminals, closet to the equipment. Ensure that the SPD has a maximum surge current rating of 50kA per phase (sum of L-N plus L-G) or greater. Verify that the SPD has been labeled to indicate that the unit is UL 1449, Third Edition Listed.

Ensure that the SPDs has a visual indication system that monitors the weakest link in each mode and shows normal operation or failure status and also provides one set of normally open (NO)/normally closed (NC) Form C contacts for remote alarm monitoring. The enclosure for a SPD shall have a NEMA 4 rating.

~~***620-2.7.2 SPD at Point of Use:*** *Install a SPD at the point the ITS devices receive 120 volt power. Ensure that these devices comply with the functional requirements shown in Table 785-1. Ensure that the units are rated at 15 or 20 amps load and are configured with receptacles.*~~

~~*Ensure that these units have internal fuse protection and provide common mode (L+N-G) protection.*~~

620-2.7.2~~3~~ SPD for Low-Voltage Power, Control, Data and Signal Systems: *Install a specialized SPD on both ends of all conductive circuits including, but not limited to, data communication cables, coaxial video cables, and low-voltage power cables. Ensure that these devices comply with the functional requirements shown in Table 620-1 for all available modes (i.e. power L-N, N-G; L-G, data and signal center pin-to-shield, L-L, L-G, and shield-G where appropriate).*

Table 620-1				
SPD Minimum Requirements				
Circuit Description	~~Clamping Voltage~~MCOV	Data Rate	Surge Capacity	Maximum Let-Through Voltage
12 VDC	15-20 V	N/A	5kA per mode (8x20 µs)	<150 Vpk
24 VAC	30-55 V	N/A	5kA per mode (8x20 µs)	<175 Vpk
48 VDC	60-85 V	N/A	5kA per mode (8x20 µs)	<200 Vpk
Coaxial Composite Video	4-8 V	N/A	10kA per mode (8x20 µs)	<65 Vpk (8x20 µs/1.2x50µs; 6kV, 3kA)
RS422/RS485	8-15 V	Up to 10 Mbps	10kA per mode (8x20 µs)	<30 Vpk
T1	13-30 V	Up to 10 Mbps	10kA per mode (8x20 µs)	<30 Vpk
Ethernet Data	7-12 V	Up to 1 Gbps	1kA per mode (10x1000 µs)	<30 Vpk

Ensure that SPDs are listed and meet the requirements of UL 497B or UL 497C, as applicable.

Formatted Table

Formatted Table

620-2.7.3~~4~~ Mechanical Specifications: *Ensure equipment is permanently marked with manufacturer name or trademark, part number, and date of manufacture or serial number.*

All parts must be made of corrosion-resistant materials, such as plastic, stainless steel, anodized aluminum, brass, or gold-plated metal.

620-2.7.4~~5~~ Environmental Specifications: *Ensure that SPDs operate properly during and after being subjected to the temperature and humidity test profile described in NEMA TS 2, Section 2.2.7, and the vibration and shock tests described in NEMA TS 2, Sections 2.2.8., and 2.2.9.*

620-2.7.5~~6~~ Manufacturer's Warranty: *Ensure that the SPD has a manufacturer's warranty covering failures for a minimum of 10 years from the date of final acceptance by the Engineer in accordance with 5-11 and Section 608.*

The term "failure" for warranty replacement is defined as follows:

Parallel-connected, power-rated SPD units are considered in failure mode when any of the visual indicators shows failure mode when power is applied to the terminals at the unit's rated voltage, or the properly functioning over-current protective device will not reset after tripping.

Series-connected, low-voltage power, data, or signal units are considered in the failure mode when an open circuit condition is created and no data/signal will pass through the SPD device or a signal lead is permanently connected to ground.

In the event that the SPD, including any component of the unit, should fail during the warranty period, the entire SPD shall be replaced by the manufacturer at no cost to the Department or maintaining agency.

~~Use ground rods made of copper-clad steel with a minimum diameter of 5/8 inches. Ground rod sections must be a minimum of 8 feet in length and manufactured for the sole purpose of providing electrical grounding.~~

~~**620-2.2 Grounding Conductors:** Use solid No. 6 AWG copper insulated (green) conductor for electrical or lightning protection ground from the system ground bus or barrier plates to the grounding electrode assembly. Use either solid or stranded No. 6 AWG copper insulated (green) conductor for all ground connections.~~

~~**620-2.3 Exothermic Grounding Bond:** Use materials from the same source, meeting the requirements of the Institute of Electrical and Electronics Engineers Standards 80 and 837.~~

~~**620-2.4 Ground Rod Coupling Devices:** Use a coupling device for grounding electrode to grounding electrode connections approved by the Engineer.~~

620-3 *Installation*~~Requirements for Grounding~~.

620-3.1 General: *Construct a single-point grounding system. Install the primary ground rod assembly in an electrical pull box so that the top four inches are accessible for inspection, resistance testing, and maintenance. The primary ground rod assembly and electrical pull box shall be installed between 12 inches to 36 inches from the element being grounding. The top of all other grounding electrode assemblies connected to the primary grounding electrode assemble in an array shall be buried a minimum of 18 inches below grade. Direct bury grounding conductors used to connect ground rod assemblies a minimum of 18 inches below finished grade.*

Bond all ground rod assemblies and arrays together with solid bare tinned copper wire unless otherwise shown on the plans. Install grounding conductors in a straight path.

Make all bonds between ground wires and ground rod assemblies and arrays with an exothermic bond with the following exception: do not exothermically bond sections of ground

Formatted: Body Text

Formatted: Indent: First line: 0"

rods to create the ground rod assembly and do not use exothermic bonds on connections within a cabinet. Apply an anti-oxidant compound to all mechanical connections.

Connect primary surge protection for power at the service entrance or main disconnect. Connect secondary surge protection at point of use, unless otherwise shown in the plans.

Ensure that lightning protection systems conform to the requirements of NFPA 780, Standard for the Installation of Lightning Protection Systems. Install SPDs that have an operating voltage appropriate for the characteristics of the circuits they protect. ~~Meet all local electrical codes which exceed these Specifications. Install all grounding conductors, which bond grounding electrode assemblies, 18 inches below finished grade. Accomplish grounding for any element of a traffic control signal and device installation by installing either a grounding electrode assembly or a grounding electrode array, unless otherwise specified in the Contract Documents.~~

~~Bond all grounding electrode assemblies and arrays together and place in a location that minimizes the length of the grounding conductor between the assembly or array and the element being grounded.~~

620-3.2 Minimum Grounding Resistance: *Obtain a resistance to ground of 5 Ohms or less for each of the following elements or install multiple ground rod assemblies totaling a maximum length of 80 feet.*

a. Power service for traffic control devices
b. Signal and ITS cabinets
c. ITS Poles/Structures with electronic equipment
d. Electronic equipment
e. DMS and DMS structures
f. Equipment Shelters and fencing
g. Communication Towers

Obtain a resistance to ground of 25 Ohms or less for each of the following elements or install multiple ground rod assemblies totaling a maximum length of 20 feet.

a. Conventional lighting
b. External lighting for signs
c. Signal cable & span wire
d. Aerial interconnect messenger wire
e. Pedestals for pedestrian signals
f. Pull boxes with AC power
g. Splice vaults with wire grounding units

Install a minimum of one ground rod assembly as a primary ground rod. If a grounding and lightning protection system using a single ground rod assembly does not achieve the required resistance to ground, extend the length of the ground rod assembly an additional 20 feet or install an additional ground rod assembly 40 feet away and connect it to the main ground rod assembly to create a ground rod array. Continue installing ground rod assemblies connected in an array until the required resistance is obtained or until the maximum required total length of ground rod is installed.

Grounding systems formed from horizontally constructed conductive radials are permitted if site conditions prohibit the use of vertically driven rods as permitted by the NEC Article 250.53(G). A grounding system consisting of the maximum total length of ground rod required is acceptable in cases where soil conditions prevent the grounding system from

Formatted: Default

achieving the required resistance to ground. Submit the site resistance measurement to the Engineer. ~~Install 40 feet of ground assembly or array for each of the following elements:~~

~~(a) Electric power service~~
~~(b) Pole with electrical power service installed~~
~~(c) Pole mounted cabinet with electrical power service installed~~
~~(d) Controller or detector cabinet~~

~~Install 20 feet of ground assembly or array for each of the following elements:~~

~~(a) Pole~~
~~(b) Pedestals for pedestrian signals~~
~~(c) Metal cover used with pull boxes with AC power~~

~~Ensure that all separately grounded elements at an intersection are bonded together to form an intersection grounding network.~~

~~For span wire assemblies, use the span wire to connect the grounding electrode assemblies or arrays of the poles.~~

~~Do not install a grounding electrode assembly or array for a base mounted cabinet within 6 feet of a grounding electrode assembly or array installed for a pole.~~

~~Make all bonds between ground wires and grounding electrode assemblies or arrays with an exothermic bond with the following exception: do not exothermically bond grounding electrode to grounding electrode connections or the system ground bussbar or barrier plate connections located within a cabinet.~~

~~**620-3.2 Grounding Electrode Assembly:** Provide a grounding electrode assembly consisting of one or more grounding electrodes coupled together, such that the total length of the electrodes in the assembly is a minimum of 20 feet, driven into the earth at a single point, without disrupting the electrical continuity of the assembly.~~

~~Install the grounding electrode assembly so that the final elevation at the top is 6 inches below finished earth grade. Mark the location of the assembly with a stake and keep uncovered until the Engineer performs a final inspection of the installation.~~

~~**620-3.3 Grounding Electrode Array:** Provide a grounding electrode array consisting of two or more grounding electrode assemblies, bonded together and spaced a minimum of 6 feet apart.~~

~~**620-3.4 Grounding Poles:** Ground all poles, including pedestals for pedestrian signals, in accordance with the details for grounding and connections shown in the Design Standards.~~

~~For non-metallic traffic signal poles, including pedestals for pedestrian signals, accommodate the ground connection from signal heads and span wires to the ground electrode assembly or array located at the pole base in accordance with the details in the Design Standards, Index No. 17727.~~

~~When erecting new metal poles within 10 feet of existing metal poles or structures, bond the new and existing poles or structures together.~~

~~**620-3.5 Grounding Electric Power Service:** Ground all electric power services in accordance with the details for grounding and connections shown in the Design Standards, Index No. 17736.~~

~~**620-3.6 Grounding Controller or Detector Cabinets:** Ground controller or detector cabinets to the bussbar located in the cabinet. Place the grounding electrode assembly or array as close to the cabinet as possible.~~

~~**620-3.7 Grounding Span Wire Mounted Signal Heads and Electrically Powered Signs:** Ground span wire mounted signal heads and electrically powered signs through the span wire assembly in accordance with the details shown in the Design Standards, Index No. 17727.~~

~~Do not use guy wires for grounding purposes, however bond any guy wire to the span wire as part of the intersection grounding network.~~

620-3.3 Grounding Traffic Control Systems at Signalized Intersections: *Ensure that all separately grounded elements at an intersection (signal cabinet, power service, mast arms or strain poles, etc.) are bonded together to form an intersection grounding network array.*

For traffic signal poles, including pedestals for pedestrian signals, accommodate the ground connection from signal heads and electrically powered signs through span wires to the ground rod assembly or array located at the pole base in accordance with the details in the Design Standards.

For span wire assemblies, use the span wire to connect the ground rod assemblies or arrays of the poles. Do not use guy wires for grounding purposes, however bond any guy wire to the span wire as part of the intersection grounding network.

620-3.4 Grounding Traffic Control Systems on Highways: *Install the primary ground rod at the base of the traffic control device supporting structure. Bond all metal components of the system (such as cabinets, steel poles, and concrete pole grounding wire) to the grounding system using a mechanical connection on the equipment side and an exothermically welded connection at the down cable. Do not use split bolts for grounding system connections.*

Connect all ground rod assemblies and any associated grounded electrical system within a 100-foot radius (but not beyond the edge of the roadway) of the primary ground rod. Connect the primary ground rod to a single point main grounding bar inside the equipment cabinet or mounted to the base of the traffic control device supporting structure unless otherwise shown on the plans.

Place multiple grounding rod assemblies in an array as depicted in the Design Standards unless otherwise shown on the plans. If a required array cannot be placed in the right-of-way, submit an alternate placement detail for approval.

620-3.5 Grounding Highway Lighting Systems: *Ground each metal light pole.*

For poles on bridge structures, bring the grounding conductors out to a pull box at each end of the structure and connect them to driven ground rods 20 feet in length.

Ground all high mast poles in accordance with the details for grounding in the Design Standards, Index No. 17502.

620-3.6 Grounding Equipment Shelters: *Install all grounds for the equipment shelter on the side of the building that utilities, communication cables, and fiber enter. Connect all earth grounds to this point, including the grounding system for the surge protection devices (SPDs). Make all connections to SPDs according to the manufacturer's recommendations.*

Ensure that communication cables, AC power, emergency generator, and equipment frames are connected by the shortest practical route to the grounding system. Protect the lead lengths from each device to the SPD.

Use compression type connection for all interior connections to bond ground conductors to equipment in the shelter. For connections to bus bars, use mechanical connections having two bolts on a double-lug connector. Install star washers, or another means that accommodates the fasteners used and to achieves reliable electrical connections that will not deteriorate. Crimp and solder all wires connected to lugs or clamps. Verify electrical continuity of all connections. Remove all non-conducting surface coatings before each connection is made.

Ensure that ground conductors are downward coursing, vertical, and as short and straight as possible. Ensure that the minimum bending radius for interior equipment shelter grounds is 8 inches. Avoid sharp bends and multiple bends in conductors.

620-3.6.1 Interior Grounding: *Install a No. 2 AWG solid bare copper wire approximately 1 foot below the ceiling on each wall and mount it using insulated standoffs. Ensure that the wire encircles the equipment room, forming a ring or continuous loop along the upper interior perimeter ground, and includes the wall area above the door. Mechanically connect the cable trays to the upper interior perimeter ground using stranded copper wires with green insulation and bolted terminal connectors at the cable tray ends. Make all points where cable tray sections meet electrically continuous by use of a short jumper wire with terminals attached at each end.*

Directly bond all other metallic objects, such as door frames and doors, air conditioners, alarm systems, wall-mounted communication equipment, etc., to the closest interior perimeter ground with the shortest possible stranded copper wire with green insulation. Bond the door to the doorframe using flexible welding cable.

620-3.6.2 Exterior Grounding: *Install an exterior grounding system consisting of multiple ground rods around the perimeter of the equipment shelter. to achieve the resistance to ground required in 620-3.2 Place the rods a minimum of 2 feet from the building foundation in a suitable access point. Bond the following items to the shelter's grounding system using No. 2 AWG solid bare tinned copper wire:*

1. Metal building parts not grounded by the internal grounding rings, such as downspouts and siding.

2. Ground rods provided by power or telephone utilities for grounding of AC power or surge protection devices, as permitted by local codes.

3. Shelter support skids, bases, or foundations, if applicable.

4. Any metal object larger than 4 square feet.

5. External metal fencing.

620-3.6.3 Punch Block SPD Grounding: *For all Type 66 punch blocks, install No. 2 AWG solid bare tinned copper wire to ground external line surge protection devices. Install the No. 2 AWG solid bare tinned copper wire in accordance with the SPD manufacturer's recommendations and mechanically connect them to the shelter's interior perimeter ground.*

620-3.6.4. Equipment Shelter Fence Grounding: *Ensure that the metal Type B fence is grounded to fence perimeter ground wires consisting of No. 2 AWG solid bare tinned copper wires that encircle the entire compound to achieve required resistance to ground required in 620-3.2.*

Exothermically bond any splices in the ground wire. Bury the fence perimeter ground wire a minimum of 2.5 feet below finished grade. Bond all fence posts to the fence perimeter ground wire using No. 2 AWG solid bare tinned copper wire. Bond the gate and gatepost together with a flexible ground, such as welding cable wires. Ground the gatepost to the fence perimeter ground wire using No. 2 AWG solid bare tinned copper wire. Exothermically bond all connections to the fence perimeter ground wire.

Connect the fence's top rail to each corner post and in the middle of each side. Ground the fence fabric with No. 2 AWG solid bare tinned copper wire connected to the fence posts. Connect the fence perimeter wires to the ground rods of the equipment shelter's ground system with No. 2 AWG solid bare tinned copper wire, as shown in the plans.

Ensure that all ground leads are No. 2 AWG solid bare tinned copper wires for all above- and underground grounding wire installations. Ensure that all exothermic bonds are appropriate for the application. Do not use welding or other forms of bonding without prior written approval.

620-4 -4 Ground Resistance Testing and Inspection.

620-4.1 Testing: *Measure the ground resistance with an instrument designed specifically to measure and document earth/ground resistance, soil resistivity, and current flow. Conduct the test by using the fall-of-potential method as described in the IEEE Standard 81. Provide the Engineer with written, certified test results for each testing location. Illegible hand-written results are not acceptable. Provide the following information on the test results:*

1. The formal name or ID for the location where the test was performed

2. The GPS latitude and longitude for the location where the test was performed

3. The date on which the test was performed

4. The make and model number, serial number, and last date of calibration (by an independent testing facility within the previous 12 months) for the grounding resistance testing device used

5. Contact information (including name, signature, and employer name) for each person conducting, witnessing, or certifying the test

6. Description of the local environmental and soil conditions at the time of testing

7. A rough sketch of the site grounding system; along with the corresponding measured data points

8. Page numbering showing the current page number and total page count (e.g., Page 1 of 3)

620-4.2 Inspection: *Do not backfill below-grade grounding installations and grounding connections until inspected and approved. The Engineer will inspect the installation for proper connection types, tightness, workmanship, and conformance to plans. Replace any exothermic bonds that are deemed unsatisfactory with new exothermic bonds. Repair or replace any mechanical connections that are deemed unsatisfactory. Measure the resistance at each accessible ground rod using a clamp-on earth tester. The measurement at any individual rod is the cumulative resistance of all rods in a parallel circuit.*

For grounding system inspections, notify the Engineer at least five days prior to completion of the installation. Record all test results in a standardized format approved by the Engineer prior to testing. All recorded test report data shall be dated, witnessed, and signed by at least one representative of the Department and the Contractor. Remedy all deficiencies at no cost to the Department.

Formatted: Body Text, Indent: First line: 0", Tab stops: Not at 0.75"

620-4 Basis of Payment.

The work specified in this Section will not be paid for directly, but will be considered as incidental work.

Moser Attachment 3

ITS FL Technical Subcommittee Comments regarding FDOT Surge & Grounding Specs 620: 12/13/13

Revised specs are included with track changes turned on. We have included additional explanations and information below for clarity and future consideration.

AC 120V SPD at Power Entry Point: We recommend changing this section to include SPDs at the utility disconnect feeding the cabinet, power entry to the cabinet, and point of use. The theory is to employ a cascaded surge protection layout that will more effectively protect connected equipment (this has effectively been deployed in District 7). The additional redundancy and modes of protection at the cabinet power entry are recommended to handle surges generated from ground potential rises (GPR) associated with ground strikes.

AC SPD at Point of Use: This section was removed as it is covered in the new 620.2.7.1

Low Voltage SPD: We recommend adding the requirement for SPDs at "both ends" of the conductors. We also recommend removing the 120VAC POU SPD from the table as the new verbiage above covers the requirements for that SPD. Following is additional information on Low Voltage SPDs that isn't directly related to the 620 specification, but we thought was worth including in our comments.

It appears that FDOT is relying upon UL 497B & 497C Listing and qualification for SPD suitability. There is a fundamental hiccup with that: When you read the scopes of UL 497, 497A, 497B & 497C, UL clearly defines *Primary* and *Secondary* SPDs. Their roles are different. Equally important, the two devices are intended to be cascaded together. FDOT is not doing that. (Not just FDOT – virtually nobody does it, simply because they don't know.) We interpret UL's criteria as:

- Primary Protectors are for power line crosses; and lightning protection as it relates to personnel safety, not protecting a delicate electronic widget.
- Secondary Protectors are for protecting delicate electronic widgets, but need a Primary Protector ahead of the Secondary Protector to 'bear the brunt' of a lightning strike.

In theory, one SPD could accomplish the role of both a Primary and Secondary SPD. However, our understanding of UL's Listing process is that passing either Primary or Secondary precludes passing the other, and/or prevents passing *either*. This makes FDOT's job much more difficult.

Air Terminals: 620-2.6 requires air terminals to be used on FDOT installations. We believe that FDOT LPS applications warrant additional investigation. Two objectives of LPSs are to force current where we want it to go and prevent the development of hazardous potential differences. We contend that air terminals and down conductors within feet or inches of sensitive electronics are *not* where we want current to go. It makes more sense to keep those currents as *far away* as possible.

We hypothesize that LPS standards have mature algorithms recommending the height and location of air terminals such that they create spheres of protection below them. From a historical perspective, within the geographical sphere(s) of protection, the *only* place where lightning will attach is the air terminal. Within that admittedly small geographical area, we believe there *is* evidence that air terminals attract lightning. A flaw in this logic is that lightning could attach regardless of whether or not an LPS exists. In either case, there is minimal risk in eliminating the LPS.

Grounding Evaluations Based Solely on Resistance Instead of Inductance:

Ground resistance measurements at dc or low frequency do not necessarily translate into ground impedance at surge or lightning frequencies. This is not an FDOT-only issue. We bring this up more for awareness and future consideration. Below is supporting information:

Surge suppression generally relies upon Surge Protection Devices (SPDs) coupled with grounding methods. Several surge standards explain how inductive impedances attenuate lightning surges and limit surge propagation. This is governed by the formula V = -L di/dt, which quantifies voltage drops across inductive components. (This mathematically explains why SPD leads should be short.)

Traditional practices require 40 foot ground rod spacing, driven 20 feet. Plugging a typical 6,000V, 3,000A 8x20µs surge into the above formula, we can assess what affect that a second ground rod might offer, *specifically with regard to surge suppression*, if driven various distances from the first ground rod. The inductance of wire, L, is approximately 0.3µH/foot. Change in current, di, is ≈3,000A. Change in time, dt, is ≈8µs. (Note that changing surge ampacity and/or rise time can yield dramatic changes.)

$V = - L\ di/dt = - 0.3 \times 10^{-6}$ Henrys/foot x $(3{,}000A / 8 \times 10^{-6}s) = -112.5$ V/foot.

A 'crossover point' can be calculated whereby inductive impedance attenuates the original 6,000V surge voltage down to 0V. In this example, 6,000V / 112.5V/foot = 53.3 feet. Beyond 53.3 feet, there is no longer any driving voltage to push the surge any farther. The math suggest that no surge current will reach the bottom of the second rod.

This becomes much more interesting when dealing with a second lightning stroke (aka return stroke). The first stroke effectively cuts a path in the air for the second stroke, so rise time is much faster; more like 0.5µs instead of 8µs. Suppose the stroke is 10,000A, which is reasonable.

$V = - L\ di/dt = - 0.3 \times 10^{-6}$ Henrys/foot x $(10{,}000A / 0.5 \times 10^{-6}s) = -6000$ V/foot.

Voltage drops of 6000V/ft are impressive! We do not really know the voltage of a lightning strike; but suppose it is 100,000V. 100,000V / 6,000V/ft = 16.67ft. The math suggests that this lightning surge would never reach the bottom of a 20ft ground rod. (!!!) That might change how ground grids are configured. (i.e., less deep, less separated rods, use straps instead of wire to reduce inductance, etc.)

Farquhar Attachment

Lou Farquhar APT Comments & Opinions regarding FDOT Surge & Grounding Specs: 12/18/13

Low Voltage SPD Surge Specs: It appears that FDOT is relying upon UL 497B & 497C Listing and qualification for SPD suitability. There is a fundamental hiccup with that: When you read the scopes of UL 497, 497A, 497B & 497C, UL clearly defines *Primary* and *Secondary* SPDs. Their roles are different. Equally important, the two devices are intended to be cascaded together. FDOT is not doing that. (Not just FDOT – virtually nobody does it, simply because they don't know.)

Below are the Scopes, copied from UL.com. Primary Protectors are intended to protect against accidental crosses with power lines, and provide protection against lightning. Secondary Protectors are intended for *"conditions that bypass the primary protector"*. I interpret UL's criteria as:

- Primary Protectors are for power line crosses; and lightning protection as it relates to personnel safety, not protecting a delicate electronic widget.
- Secondary Protectors are for protecting delicate electronic widgets, but need a Primary Protector ahead of the Secondary Protector to 'bear the brunt' of a lightning strike.

In theory, one SPD could accomplish the role of both a Primary and Secondary SPD. However, my understanding of UL's Listing process is that passing either Primary or Secondary precludes passing the other, and/or prevents passing *either*.

The subtle semantics differences between protecting electronics versus protecting people becomes important in an FDOT context. For example, what is FDOT trying to do, protect people (that generally are not present, nor fully lightning-protectable at ITS roadside equipment), or protect the expensive widgets? These are two very different tasks. Sorry for philosophical booby traps. This can easily be pushed off until next revision cycle.

UL 497: Primary Protectors for Communications Circuits (CCN: QVGV)

"These protectors are intended to suppress abnormal voltage conditions that may exist on the circuit due to accidental contact with electric light or power conductors operating at or over 300 V to ground as defined in the NEC. These devices may also be used to protect against electrical transients from an electromagnetic disturbance or higher than normal voltages induced on the communication circuits due to close proximity of the protected circuit to electric light or power conductors."

UL 497A: Secondary Protectors for Communications Circuits (CCN: QVRG)

"These protectors are intended to suppress abnormal voltage and/or current conditions that bypass the primary protector. These devices limit currents to less than the current-carrying capacity of Listed communication wire employed in the communication loop of the protected premise. Any overvoltage protection and/or grounding connection is intended to be electrically located on the equipment side of the protector's current-limiting means." "Secondary protectors are intended to be

used in the protected side of telecommunications networks that have an operating rms voltage to ground less than 150 volts."

UL 497B: Isolated Loop Circuit Protectors - Protectors for Data Communications and Fire-Alarm Circuits (CCN: QVGQ)

"These protectors are intended as suppression devices for abnormal voltage conditions that may exist on the circuit due to electrical transients from an electromagnetic disturbance. These protectors are not intended for use on circuits exposed to accidental contact with electric light or power conductors operating at over 300 V to ground."

UL 497C: Primary Protectors for Coaxial Communications Circuits (CCN: QVKC)

"The primary coaxial protectors are intended to suppress abnormal voltage conditions that may exist on the circuit due to accidental contact with electric light or power conductors operating at over 300 V to ground as defined in Articles 800 and 830 of the NEC. These protectors may also be used to protect against electrical transients produced from electromagnetic disturbance on the communication circuits."

Lightning Protection Systems (LPSs) on Roadside ITS Equipment, Normally *Without* Human Occupation:

I understand that the present practice is to employ LPS systems with air terminals, down conductors, etc. per cookie-cutter guidelines in Lightning Protection Standards. I believe that FDOT applications warrant additional investigation.

- If the intent of the LPS is to provide a sacrificial lightning 'attachment location' to protect the pole, but not necessarily the electronic equipment, then maybe leave everything as is. Ditto, if there are liability concerns as following established LPS standards offers legality advantages.
- However, if the intent of the LPS is to fully protect delicate electronic equipment, I contend this is a costly and nearly futile exercise based on the following reasoning:

Two objectives of LPSs are to force current where we want it to go and prevent the development of hazardous potential differences. I contend that air terminals and down conductors within feet or inches of sensitive electronics are <u>*not*</u> where we want current to go. It makes more sense to keep those currents as *far away* as possible. This would apply to pole-mounted CCTVs, Dynamic Message Signs, Vehicle Detection equipment, etc. I am not convinced that LPS standards focus on protecting sensitive electronics, rather on life safety foremost. (Although, this is well worth additional debate.)

Direct lightning's electromagnetic fields at such close proximity prove catastrophic. Plus the pole usually has one reference to ground while any energized conductors inside the pole usually have a different reference to ground. This creates potential differences that no SPD can fully equalize or protect against.

This is coming from years of experience as an SPD mfg, plus years of IEEE Surge Suppression Standards development across multiple applications. For example, the wind turbine industry has far worse lightning problems. Their towers are much higher than ITS', and they have much more sophisticated electronics, more of them, and more expensive too. The ITS industry can learn a lot from the wind turbine industry. Luckily, ITS does not suffer the problems of lightning delaminating a rotor blade, causing such unbalanced rotating mass that it can collapse an entire tower.

I have an opinion that the best way to deal with direct lightning strikes is to stay as far away from them as possible. Witness utility substation and NASA launch tower lightning protection. Both employ lightning masts to draw lightning away from their most sensitive equipment. This is different than letting lightning attach and then attempting to deal with it.

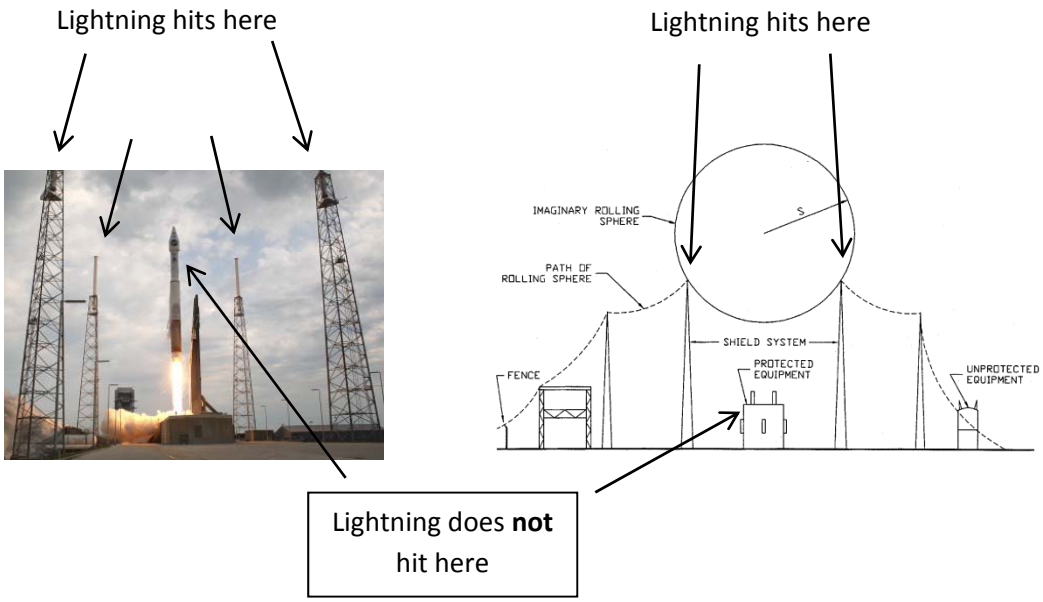

While lightning masts might make financial sense at substations or launch pads, standalone lightning masts are unlikely to be cost effective for ITS equipment. (I offer a modest-cost solution patterned off of Space Shuttle towers later in this document.)

This next topic is also very debatable: There is rationale that LPSs do not attract lightning, and/or do not increase the likelihood of a direct strike. Consequently, including an LPS on an ITS pole will not increase the probability of direct strikes. (There may be conditional wording, semantics or variations on this theme.)

I contend that LPS standards have mature algorithms recommending the height and location of air terminals such that they create spheres of protection below them. From a historical perspective, *within the geographical sphere(s) of protection*, the <u>*only*</u> place where lightning will attach is the air terminal. Consequently, I believe there *is* evidence that air terminals attract lightning. (James Clerk Maxwell of 'Maxwell's Equations' fame postulated the same in 1876.) A flaw in my logic is that lightning could attach regardless of whether or not an LPS exists. In that case, there is no risk in eliminating the LPS, or an outside copper down conductor theft risk. Note that a tubular metallic pole has less inductance than the round down conductor and serves as a better conductor. If the down conductor is inside the metallic pole, I believe there is an effect much like coaxial cable where surge current divides unequally and propagates at different speeds due to inductive effects, causing weird behaviors. If eliminating air terminals, LPS standards suggest that 3/16" thick metal is sufficient to displace the air terminals.

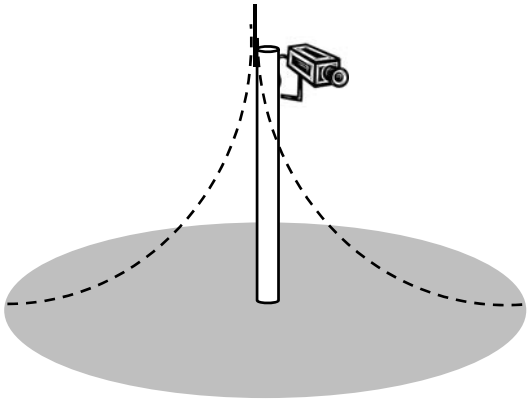

Possible pole / lightning mast implementation:

Existing metal pole with a ~500kV utility transmission line insulator between the pole and an air terminal. Lightning hits the air terminal and goes down the ground wires, *not* down the tower. Keeps lightning as far from the load as possible without building a separate lightning mast. (Shuttle tower did something very similar. People did not notice the conductor lines, but they are there.) Note probable mowing challenges.

This might be ugly enough to *scare* lightning away!

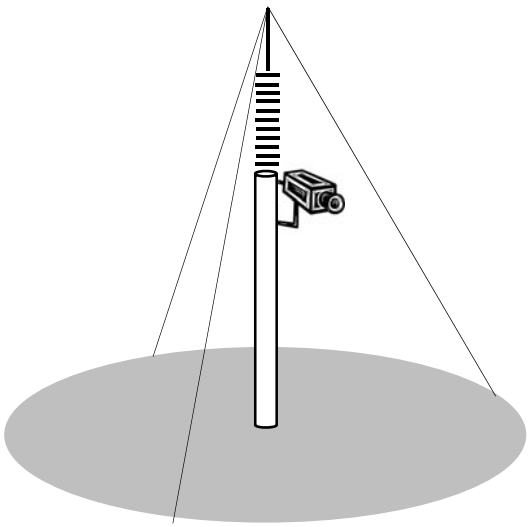

A variation on this could be an isolated air terminal and down conductors off the side of the metal pole. (I suspect someone has already looked at this.) As above, the intent is to try to prevent the pole from being energized by the lightning. If the pole becomes energized, then there is a substantial risk of flashover between the metallic pole and other electrical equipment. If the pole becomes energized, I am not convinced the LPS provides value.

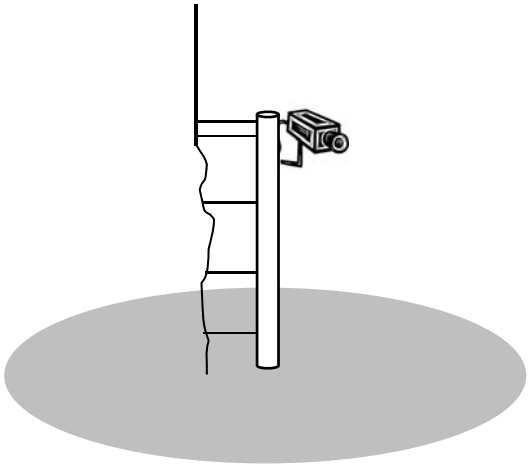

Grounding Evaluations Based Solely on Resistance Instead of Inductance:

Ground resistance measurements at dc or low frequency do not necessarily translate into ground impedance at surge or lightning frequencies. This is not an FDOT-only issue. There are multiple organizations evaluating this. Thus far, there are no clear cut solutions. We bring this up more for awareness and future consideration. Below is additional and supporting information:

Surge suppression generally relies upon Surge Protection Devices (SPDs) coupled with grounding methods. Several surge standards explain how inductive impedances attenuate lightning surges and limit surge propagation. This is governed by the formula $V = -L\, di/dt$, which quantifies voltage drops across inductive components. (This mathematically explains why SPD leads should be short.)

I participated in a recent grounding roundtable, where there was discussion about how far apart ground rods should be placed to avoid interaction. Traditional practices suggest farther distances to minimize undesirable interactions. Plugging a typical 6,000V, 3,000A 8x20µs surge into the above formula, I assessed what affect that a second ground rod might offer, *specifically with regard to surge suppression*, if driven various distances from the first ground rod. The inductance of wire, L, is approximately 0.3µH/foot. Change in current, di, is ≈3,000A. Change in time, dt, is ≈8µs. (Note that changing surge ampacity and/or rise time can yield dramatic changes.)

$V = - L\ di/dt = - 0.3 \times 10^{-6}$ Henrys/foot x $(3{,}000A / 8 \times 10^{-6}s) = -112.5$ V/foot.

A 'crossover point' can be calculated whereby inductive impedance attenuates the original 6,000V surge voltage down to 0V. In this example, 6,000V / 112.5V/foot = 53.3 feet. Beyond 53.3 feet, there is no longer any driving voltage to push the surge any farther. As it applies to a regional specification requiring 40 foot ground rod spacings, driven 20 feet, the math suggests that no surge current will reach the bottom of the second ground rod.

This becomes much more interesting when dealing with a second lightning stroke (aka return stroke). The first stroke effectively cuts a path in the air for the second stroke, so rise time is much faster; more like 0.5µs instead of 8µs. Suppose the second stroke is 10,000A, which is reasonable.

$V = - L\ di/dt = - 0.3 \times 10^{-6}$ Henrys/foot x $(10{,}000A / 0.5 \times 10^{-6}s) = -6000$ V/foot.

Voltage drops of 6000V/ft are impressive! We do not really know the voltage of a lightning strike; but suppose it is 100,000V. 100,000V / 6,000V/ft = 16.67ft. The math suggests that this lightning surge would never reach the bottom of a 20ft ground rod. (!!!) That might change how ground grids are configured. (i.e., less deep, less separated rods, use straps instead of wire to reduce inductance, etc.)

In a separate discussion at the grounding seminar, one group lamented over ground rods. Pure copper rods are stolen and copper-clad steel ground rods have rusted away within two years near Florida salt water environments. Stainless steel rods are not stolen, but are reported to have substantially higher ground resistance.

Appreciating the issues above, APT hypothesized that stainless steel ground rods might offer similar impedance to copper-clad at surge frequencies. APT then evaluated the performance of a ten foot, 5/8" diameter stainless steel rod against an identical length and diameter copper-clad ground rod. A formal report is available.

- At 50A, 60Hz, the stainless rod offered an additional 178% impedance. ('Low' freq.)

- At 6kV, 3kA, 8x20µs surge impulse, the stainless rod offered an additional 8.7% impedance. ('High' freq.)

The comparative impedance differences at different frequencies are substantial. This suggests that 'low-frequency' data may lead to erroneous conclusions during 'higher-frequency' surge events. For example, these results suggest that stainless ground rods may offer cost effective life expectancy benefits, while not seriously degrading surge frequency grounding ability.

Again, this is more food for future thought and industry advancement. Other industries are actively investigating these issues and attempting to advance the knowledge base. One colleague from standards committees is extremely active in surge & lightning related grounding issues. His name is Mitchell Guthrie at mitchellguthrie@embarqmail.com. He has an impressive resume', is a former Chair of NFPA 780, and is Chairing Task Groups on roadways, bridges & piers. I don't normally plug folks, but…

Thank you for the opportunity to comment. I volunteer to participate as you desire appropriate.

Thank you,
Lou Farquhar, PE, CEM, GBE
VP – APT Engineering Services
(800) 237-4567