SECTION 11.3
Volume II

ADVANCED ULTRASONIC TESTING

11.3.1 PURPOSE

This procedure provides guidance for the development and implementation of procedures for the use of Advanced Ultrasonic Testing on Florida Department of Transportation (Department) Structural Steel Fabrication Projects.

11.3.2 AUTHORITY

Section 20.23(3)(a) and 334.048(3) Florida Statues.

11.3.3 REFERENCES

For all reference documents always use the most current approved version unless otherwise specified in the ***Contract Documents***.

ASTM E-494 Standard Practice for Measuring Ultrasonic Velocity in Materials

ASTM E-543 Standard Specification for Agencies Performing Nondestructive Testing

ASTM E-2700 Standard Practice for Contact Ultrasonic Testing of Welds Using Phased Arrays

ASTM E-2491 Guide for Evaluating Performance Characteristics of Phased-Array Ultrasonic Testing Instruments and Systems

ASTM E-1316 Standard Terminology for Nondestructive Examinations

ASNT SNT-TC-1A Recommended Practice for Personnel Qualification and Certification in Nondestructive Testing

AASTHO/AWS D1.5 Bridge Welding Code

AWS D1.1 Structural Welding Code-Steel

ISO 2400 Non-Destructive Testing – Ultrasonic Examination Specification for Calibration Block No. 1

11.3.4 INTRODUCTION

This procedure provides mandatory requirements that shall apply when Phased Array Ultrasonic Testing (PAUT) is approved for use. Unless otherwise noted, text is common to both D1.1 and D1.5. In common paragraphs, section numbers not in parentheses are D1.1; section numbers in parentheses are D1.5.

11.3.5 SCOPE

This procedure establishes the Department's requirements and activities for the use of Advanced Phased Array Ultrasonic Testing on Structural Steel Projects. These requirements and activities pertain to the equipment/ instrumentation, personnel requirements, calibration, equipment verification, inspection technique, acceptance criteria, and documentation of test results. Provide this information to the Department for review and approval for initial use and if any of the requirements change.

The procedures and standards set forth in this Volume govern phased array examinations of groove welds (excluding tubular T-, Y-, and K-connection welds), including heat-affected zones (HAZ), for thicknesses between (D1.1) 3/16 in and 8 in (D1.5 3/16" and 4") using automatic data acquisition (encoded line scanning). For application and techniques outside the scope of this Volume, other procedures and criteria must be developed and validated.

11.3.6 DEFINITIONS

11.3.6.1. Bandpass Filtering: A function of the receiver circuit in most modern UT and PAUT equipment designed to filter out unwanted returned sound frequencies outside of that used for sound wave generation. The frequencies of sound on return are of much broader range than the range of frequencies put into the test piece.

11.3.6.2. Channel: A send/receive circuit in the phased array unit. The number of channels dictates the maximum number of elements that the phased array unit can support as a whole.

11.3.6.3. Dead Elements: Individual elements that are no longer functional due to broken cables, connectors or element failure. This can also include elements with sub-par performance.

11.3.6.4. E-Scan: A single focal law multiplexed across a grouping of active elements for a single beam angle which is stepped along the phased array probe length in defined incremental steps.

11.3.6.5. Element: An individual crystal (piezo-composite material) within a phased array probe.

11.3.6.6. Encoded: Using an encoder.

11.3.6.7. Encoder: A device, normally in the form of a wheel that records probe position for computer analysis for an automatic data acquisition system.

11.3.6.8. Encoding: Using an encoder.

11.3.6.9. Focal Law: A phased array operational file defining search unit elements and time delays for transmitted and received signals.

11.3.6.10. FSH: Full screen height.

11.3.6.11. Imaging Views: Images defined by different plane views between the ultrasonic path (ultrasonic axis), beam movement (index axis), and probe movement (scan axis). See Figure 1. Also called “scans” (see A to E below).

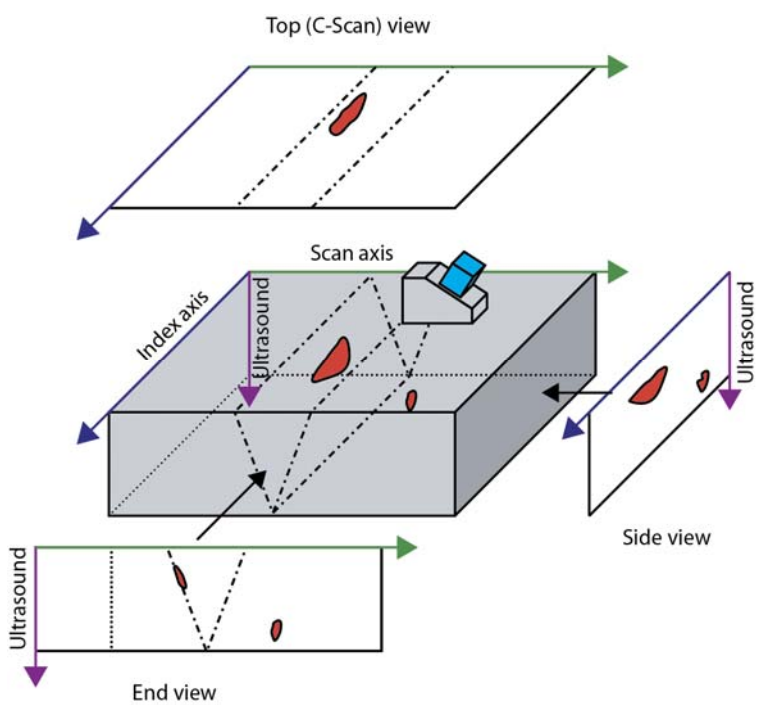

Figure 1. Phased Array Imaging Views

A. A-Scan is a representation (view) of the received ultrasonic pulse amplitude versus time of flight in the ultrasonic path, also called a waveform. This is the view by which all other views are formed and still the basis for acceptance or rejection of ultrasonic indications.

B. C-Scan is a 2-D plan or top view of the recorded A-scan data showing the beam movement (index axis) versus the probe movement (scan axis) path, using the maximum amplitude of the A-scans at each transverse location. The C-scan may be presented in the volume-corrected or uncorrected form. Normally the C-scan is uncorrected for angled beam inspections.

C. Sectorial View is a 2D view of all A-scans from a specific set of elements corrected for delay and refracted angle. Also called S-scan or sectorial scan.

D. Side View is a 2-D view of the recorded A-scan data for one angle showing the ultrasonic path (ultrasonic axis) along the probe movement (scan axis) path. The A-scan amplitude is color coded. The side view may be presented in the volume-corrected or uncorrected form, sometimes called B-scan or D-scan. These terms are not used in this procedure because there is no consensus on which letter corresponds to side view or end view.

E. End View is a 2-D view which is very similar to the side view. The end view is at 90° to the side view and shows the ultrasonic path (ultrasonic axis) versus the beam movement axis (index axis).

11.3.6.12. Line Scan: The phased array scanning technique in which an E-scan, S-scan or combination thereof is performed with the beams directed perpendicular to the weld, at a fixed distance from the welds, in a manner demonstrated to provide full weld coverage. Also called a linear scan.

11.3.6.13. PAUT: Phased Array Ultrasonic Testing.

11.3.6.14. Phased Array Instrument: A multichannel test instrument used with multiple-element probes which enable the application of delay/focal laws when transmitting, and receiving, before summing.

11.3.6.15. Phased Array Technique: A technique wherein UT data is generated by constructive phase interference formed by multiple elements controlled by accurate time delayed pulses. This technique can perform beam sweeping through an angular range (S-scans), beam scanning at fixed angle (E-scans), beam focusing, lateral scanning and a variety of other scans depending on the array and programming.

11.3.6.16. Phased Array Probe: A probe made up of several piezoelectric elements individually connected so that the signals they transmit or receive may be treated separately or combined as desired. The elements can be pulsed individually, simultaneously, or in a certain pattern relative to each other to create the desired beam angles or scan pattern.

11.3.6.17. Pitch: The center to center distance between two successive phased array probe elements.

11.3.6.18. Pulser: The instrument component which generates the electrical pulse. The number of pulsers dictates how many elements within a phased array probe may be applied within a given focal law.

11.3.6.19. S-Scan: The S-scan beam movement is a set of focal laws that provides a fan-like series of beams through a defined range of angles using the same set of elements.

11.3.6.20. Saturated Signal: A signal in which the true peak amplitude cannot be measured in the stored data file due to bit depth of the phased array system.

11.3.6.21. Scan Plan: A document specifying key process elements such as equipment detail, focal law settings and probe positions as necessary to complete an examination; also depicts weld coverage.

11.3.6.22. Scanner: A device used for holding the phased array probes in place while collecting data by means of an encoder. Scanners contain an encoder and may be automated or semi-automated types as described below.

A. Automated Scanner: A mechanized device in which the PA probe movement is computerized or driven by remote control.

B. Semi-Automated Scanner: A scanner which is manually driven along welds.

11.3.6.23. Sound-Path or Depth Calibration (Horizontal Linearity): A specific action used to compensate and adjust instrument time delay over all focal laws for specific wedge geometry for a depth or sound-path calibration.

11.3.6.24. TCG: Time Corrected Gain.

11.3.6.25. Time Corrected Gain (TCG): A calibration technique in which the search unit computes the dB gain difference needed to balance standard calibration reflectors (side drilled holes) at various material depths at one set screen amplitude. When completed, all side-drilled hole reflectors

equal the same approximate amplitude regardless of their varying metal path distances. Also called time varied gain (TVG).

11.3.6.26. Virtual Probe Aperture (VPA): The number of elements in a phased array probe used for the examination. Also called active aperture.

11.3.6.27. Volume-Corrected Scan: A presentation in which correction is made to the index axis A-scan point locations based off true positional information relative to the beam angle or angles used during the inspection. This correction is found to be useful to compensate for surface path distance variations in angle beam inspections.

11.3.7 PERSONNEL QUALIFICATION REQUIREMENTS

11.3.7.1. D1.1: Individuals who perform PAUT shall be qualified for PAUT per 6.14.6.1 and 6.21.

11.3.7.2. D1.5: Individuals who perform PAUT shall be qualified for PAUT per 6.1.3.4. In satisfying the requirements of 6.1.3.4, the qualification of the PAUT operator shall include a specific and practical examination which shall be based on the requirements of this volume. This examination shall require the PAUT operator to demonstrate the ability to apply the rules of this volume in the accurate detection and disposition of discontinuities.

11.3.7.3. Certification Requirements. Certification of Level II PAUT personnel shall be performed by an NDT UT Level III who meets the requirements of 6.14.6.2 (6.1.3.4) for PAUT and who has received a minimum of 80 hours of formal training in PAUT.

11.3.8 EQUIPMENT

11.3.8.1. Phased Array Instruments: Inspections shall be performed using phased array pulse-echo equipment which meets the requirements of 6.22 (6.15), qualified in accordance with 11.3.9. Instruments shall also meet the following requirements.

A. Number of Pulsers: The instrument shall be equipped with a minimum of 16 pulsers and channels (16:16 minimum). A minimum of 16:64 is required if E-scans are to be used.

B. Imaging Views: The phased array instrument shall be equipped with sufficient display options to provide thorough data analysis through the entire scan length and through all beams.

11.3.8.2. Straight-Beam (Longitudinal Wave) Search Units: The straight-beam (longitudinal wave) phased array probe shall produce frequencies in the range of 1 to 6 MHz. Probe dimensions shall be small enough that standing wave signals do not appear on the display. The phased array probe shall be a linear array probe capable of satisfying the resolution requirements of 6.23.3 (6.16.3). Alternatively, a UT search unit meeting the requirements of 6.22.6 (6.15.6) may be used.

11.3.8.3. Angle-Beam Search Units: Angle-beam search units shall consist of a phased array probe and an angle wedge to produce the desired refracted angles.

A. Phased Array Probe: The probe shall be a linear array type with a minimum of 16 elements and shall produce frequencies between 1 and 6 MHz. Probe pitch dimensions shall be small enough that standing wave signals do not appear on the display.

B. Angled Phased Array Wedge: The wedge shall be of a sufficient incident angle to produce sound beams in the material between 45° and 70° ±2°. Wedges shall be used within the angular range specified by the manufacturer.

11.3.8.4. Encoder: The encoder shall be digital and capable of line scanning.

11.3.8.5. Scanner: Encoding shall be performed by using a semi-automated or automated scanner as defined in 11.3.6.22.

11.3.8.6. Couplant: A couplant material shall be used between the search unit and the test material. Any commercial couplant, water, or oil may be used as couplant when performing calibrations and examinations.

11.3.8.7. Calibration Blocks: The standard reflector used for test standard sensitivity level (SSL) shall be a 0.06 in diameter side drilled hole or equivalent. This reflector may be placed in any design of calibration block, weld mock-up or actual production part at the option of the user. Alternate possible uses of the standard sensitivity reflector are shown in Figure 2. When weld mock-ups and sections of production weldments are used, the reflector shall be in locations where it is difficult to direct sound beams, thereby ensuring detection of discontinuities in all areas of interest. Mock reflectors shall be placed a minimum of 1/16 in from edges.

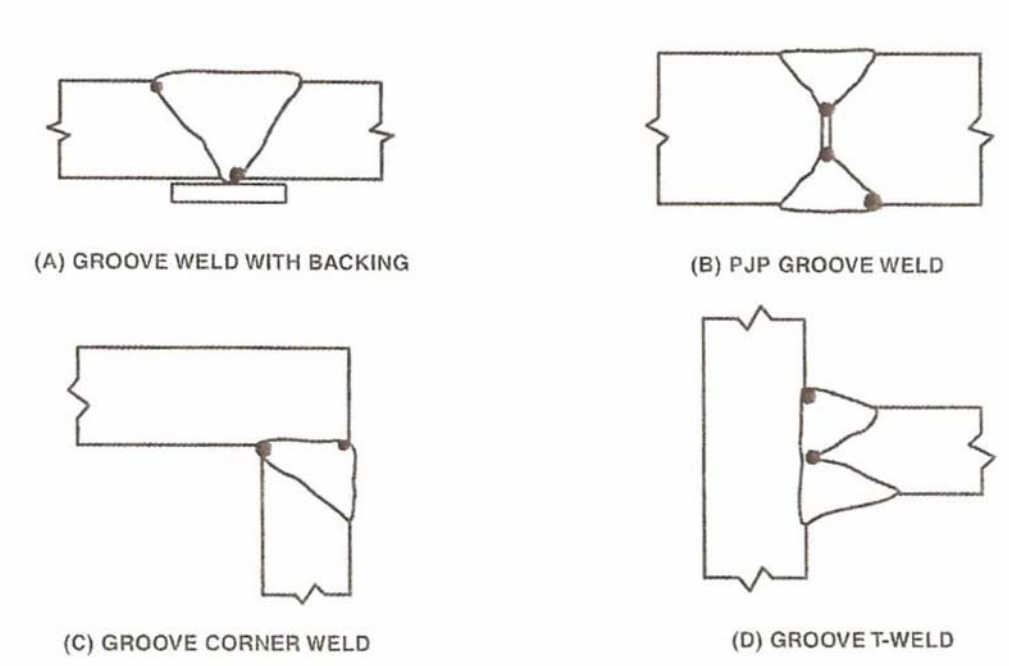

Figure 2. Example Weld Mock-up Calibration

11.3.8.8. Supplemental Calibration Block: A supplemental calibration block shall be used which allows a minimum of a 3 point TCG establishment throughout the usable sound-path range of all configured angles. The block shall be of sufficient thickness and length to allow calibration of reflectors throughout the entire examination volume to be tested. This block may be also used to set SSL provided the basic hole size of 11.3.8.7 is included in the supplemental block. Typically the thickness of this block will be a minimum of 2 ¼ times the thickness of the material being examined, when full V-path examinations are done from one face of the joint (i.e., only from Face A as illustrated in Table 6.7(6.2)). For thicker specimens in which the scan plan details half V-path examinations from multiple faces (i.e., Face A and B as illustrated in Table 6.7(6.2)), the thickness of the block may be reduced to the material thickness being evaluated (1T). It may be necessary with thicker components to plan for multi-face examinations to reduce calibration block size and to enable easier calibrations. Each calibration block should have at least 3 side-drilled holes at a range of depths to cover the entire material range to be tested. An example of a block including the basic hole size of 11.3.8.7 is a Phased Array Calibration Standard (PACS) type block as shown in Figure 3.

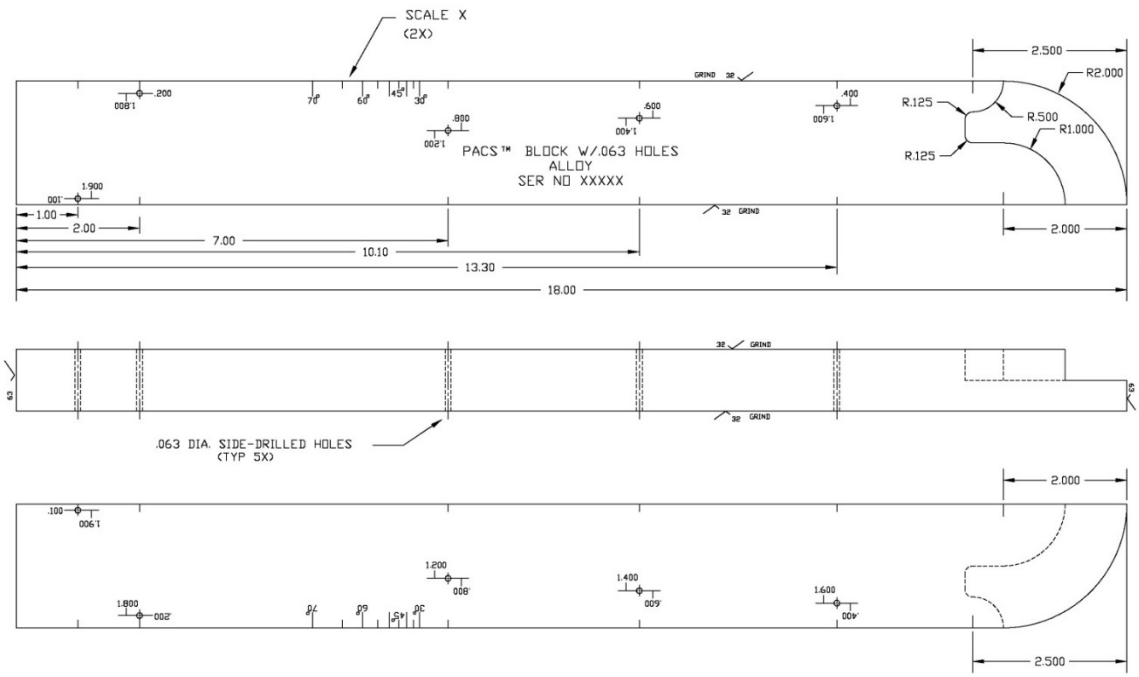

Figure 3. Example Phased Array Calibration Standard (PACS) Type Block

11.3.9 EQUIPMENT QUALIFICATION

11.3.9.1. System Linearity: System linearity verifications shall be validated at 12 month intervals. Validation shall be performed by the Contractor as detailed in 11.3.17, or, at the Contractor's option, the equipment may be sent to the manufacturer for validation.

11.3.9.2. Internal Reflections: Maximum internal reflections from each search unit shall be verified by the PAUT operator at a maximum time interval of 40 hours of instrument use and checked in accordance with 6.30.3 (6.22.3).

11.3.9.3. Resolution Requirements: Testing of the resolution of the combination of search unit and instrument shall be performed and documented per 6.23.3 (6.16.3).

11.3.9.4. Probe Operability Checks: An element operability check shall be performed by the PAUT operator on each phased array probe to determine if dead elements are present. This check shall be performed prior to initial daily use and calibration, upon each probe change, and upon each 8-hour period of continuous use. No more than 1 out of every 8 elements shall be dead and no two adjacent elements shall be dead within a given aperture.

A. Amplitude Checks: In addition, each element within a phased array probe shall be evaluated to check for comparable amplitude

responses throughout the aperture. Each element shall be verified to be within 6 dB of the element yielding the highest amplitude response. If the amplitude of any of the elements within the probe yields responses outside the 6 dB requirement, the element shall be declared dead.

11.3.10 SCAN PLANS

11.3.10.1. Scan Plans: A scan plan shall be developed for the welds to be examined. The scan plan shall provide the specific attributes necessary to achieve examination coverage, including those variables subject to material and geometric variation that are not addressed in a general procedure. Scan plan contents shall consider all essential variables listed in Table 1. The same scan plan may be used for similar weld geometries with similar surrounding component geometries as long as the weld and HAZ are covered.

Table 1
Procedure Variables for PAUT

	Essential	Non-Essential
Element numbers used for focal laws	X	
Angular range of S-scan	X	
Manufacturer's documented permitted wedge angular range	X	
Weld configurations to be examined, including thickness dimensions and base material product form (pipe, plate, etc.)	X	
Surface curvature along index axis (e.g., for longitudinal weld in tubular member)	X	
Surface curvature along scan axis (e.g., for girth weld in tubular member)		X
The surfaces from which the examination is performed	X	
Techniques (straight beam, angle beam, contact)	X	
Search unit types, frequencies, element sizes and shapes	X	
Phased array units	X	
Manual vs. automated/semi-automated scanning	X	
Method for discriminating geometric from weld defect indications	X	
Decrease in scan overlap	X	
Method for determining focal/delay laws if other than on-board equipment algorithms included in the software revision specified	X	
Major software version changes and changes that affect scan data	X	
Probe manufacturer and model		
Scanning device manufacturer and model		X
Scanning speed	X	
Couplant, if not listed in 6.26.4 (6.19.4)	X	

A. The scan plan shall demonstrate by plotting or computer simulation the appropriate refracted angles to be used during the examination for the weld prep angles and areas of concern. The scan plan shall demonstrate coverage of the required examination volume. Performance shall be verified through the calibration (i.e., beam index point and beam angle verifications). Caution should be applied when using computer modeling programs and drafted sketches to demonstrate coverage.

B. Whenever a scan plan is developed, values of essential variables shall be established and an initial calibration performed by a PAUT Level II or III to confirm adequate sound pressure throughout the configured ultrasonic range. A new calibration shall be required if an essential variable has changed.

C. The scan plan shall document the examination volume covered.

11.3.10.2. Focal Law Configuration: Focal laws shall be configured to provide the necessary coverage requirements stipulated in 11.3.10.4. Focal laws shall be created using 14 to 16 elements; however, more elements may be used if additional penetration is shown to be needed during calibration. S-scans shall be used as the primary scan to optimize coverage and shall be configured in angular sweep increments of no greater than 1°. E-scans may be used as described below to supplement S-scans but shall not be used as a sole inspection technique.

A. Index Positions: A sufficient number of index positions shall be configured to accomplish the coverage requirements of 11.3.10.4. These may be multiple physical index positions, multiple electronic index positions (grouping), or a combination of both. Scans shall contain sufficient overlap to demonstrate full coverage in the scan plan. The number of index positions required will increase as the material thickness increases. For thinner materials of approximately ¼ in or less, a single index may supply the proper coverage if the part configuration allows. For material thickness above this, 2 or more index positions will be necessary. Ultimately, the adequacy of the number of index positions is determined by the coverage shown in the scan plan and dictated by the ability to meet the coverage requirements of 11.3.10.4.

B. Focusing: An unfocused (naturally focused) sound beam shall be used for scanning. Focusing may be used to better define and dimension a given indication, but shall not be used during evaluation of the indication for acceptance.

C. Supplemental E-Scans: E-scans may be used to supplement the S-scans. When E-scans are used, a minimum overlap of 50% of each VPA shall be configured for and specified in the scan plan. E-scans may be useful for welds that can be accessed only from a single side, for welds in T-joints, or other configurations in which complete coverage of the weld, fusion face, or heat affected zone will be difficult.

D. Grouping: Combinations of multiple S-scans or of S-scans and E-scans may be used through grouping features to assist in joint coverage. When combined, the minimum overlap between each scan shall be 10% of coverage.

11.3.10.3. Procedure Variables: The parameters of examination are addressed as either essential or non-essential and are listed in Table 1. All essential variables shall be documented in the scan plan. Any changes to a variable listed as essential in Table 1 shall require the development of a new scan plan.

11.3.10.4. Testing of Welds: The entire base metal through which ultrasound must travel to test the weld shall be tested for laminar reflectors using a straight-beam search unit conforming to11.3.8.2. If any area of base metal exhibits total loss of back reflection or an indication equal to greater than the original back reflection, refer to 6.26.5 (6.19.5).

The scan plan, utilizing array configurations specified in 11.3.10.2, shall demonstrate full ultrasonic coverage in two crossing directions to cover the heat affected zone and full weld volume including weld fusion face coverage within ±10° of perpendicular (90° to the weld fusion face) for S-scans or ±5° of perpendicular for supplemental E-scans. Welds shall be tested using an angle beam search unit conforming to the requirements of 11.3.8.3.

All welds in butt joints examined by PAUT shall be tested from each side of the weld axis where access is possible. Welds in corner and T-joints shall be primarily tested from one side of the weld axis only. All welds shall be tested using applicable line scans or scanning patterns necessary to detect both longitudinal and transverse discontinuities. It is intended that, as a minimum, all welds be tested by passing sound through the entire volume of the weld and the HAZ in two crossing directions, wherever practical. For welds in corner or T-joints, the weld may be examined with a straight beam or low angle longitudinal waves from an appropriate face to aid in obtaining coverage.

A. Scanning Near Edges: If edges and corners present access or other limitations for encoded PAUT, these areas may be scanned

by running the scan in the opposite direction toward the edge, or by non-encoded PAUT using scanning patterns described in Clause 6. Use of non-encoded PAUT shall be noted in the examination report.

B. Restricted Access Welds: Welds that cannot be examined from both sides using the angle beam technique shall be noted in the examination report.

C. Backing: D1.1: For joint configurations that will contain backing that is left in place, the scan plan shall consider the effects of the backing See C-6.26.12 for additional guidance on inspecting welds with steel backing. D1.5: For joint configurations that will contain backing that is left in place, the scan plan shall consider the effects of the backing. See C-6.26.12 of AWS D1.1 for additional guidance on inspecting welds with steel backing.

D. Inspection for Transverse Indications: Welds that are ground flush shall be inspected for transverse indications using scanning pattern D as shown in Figure 6.21 (6.7). Scanning pattern E shall be used on welds with reinforcement. Encoding is not required for the transverse indication inspection.

11.3.10.5. Scan Plan Storage: Scan plan parameters shall be configured on the phased array system storage and stored in a manner that will allow repeatability for subsequent examinations.

11.3.11 CALIBRATION FOR TESTING

The phased array configuration as prepared in the scan plan shall be verified at intervals in accordance with 6.25.3 (6.18.3) and as described below.

11.3.11.1. Straight Beam Calibration: The ultrasonic range of the search unit shall be adjusted, using an E-scan at 0° set-up (or conventional straight beam probe), such that it will produce the equivalent of at least two plate thicknesses on the display. The sensitivity shall be adjusted at a location free of indications so that the first back reflection from the far side of the plate will be 80% ±5% of FSH. Minor sensitivity adjustments may be made to accommodate for surface roughness.

11.3.11.2. Shear Wave Calibration

A. Beam Angle Verification: The PAUT operator shall verify the beam angles to be within 2° of the minimum and maximum angles

configured in S-scans or within 2° of the first and last VPAs configured for E-scans using the procedure stipulated in 6.29.2.2 (6.21.2.2).

B. Horizontal Sweep: The horizontal sweep shall be adjusted to represent the actual material path distance throughout all the configured angles using an IIW block or other alternate block as detailed in 6.23.1 (6.31.1). The screen range shall be set at 3 times the material thickness at the minimum configured angle in the true depth display mode. If the joint configuration or thickness prevents full examination of the weld at these settings, the distance calibration shall be made at increased screen ranges as depicted in the scan plan.

C. Time Corrected Gain (TCG): By use of the supplemental block as specified in 11.3.8.8, a TCG shall be established throughout all configured angles at a minimum of three points throughout the material range to be tested. The TCG shall balance all calibration points within ±5% amplitude of each other.

D. Standard Sensitivity Level (SSL)L: The standard sensitivity level shall be established at 50% ±5% of full screen height off of the 0.06 in reflector as specified in 11.3.8.7. This dB level shall be noted as the primary reference level dB. (D1.1: SSL, ARL, and DRL are based on Annex S. Annex S rejection level is 5 dB above SSL. 5 dB is a 1.78:1 ratio. 50% (height of SSL) × 1.78 = 89% (height of ARL).) (D1.5: SSL, ARL, and DRL are based on AWS D1.1 Annex S. Annex S rejection level is 5 dB above SSL. 5 dB is a 1.78:1 ratio. 50% (height of SSL) × 1.78 = 89% (height of ARL).)

1. Automatic Reject Level (ARL). The ARL shall be defined as 5 dB over SSL, which equals 89% FSH. (See Figure 4.)

2. Disregard Level (DRL). The DRL shall be defined as 6 dB under SSL, which equals 25% FSH. (See Figure 4.)

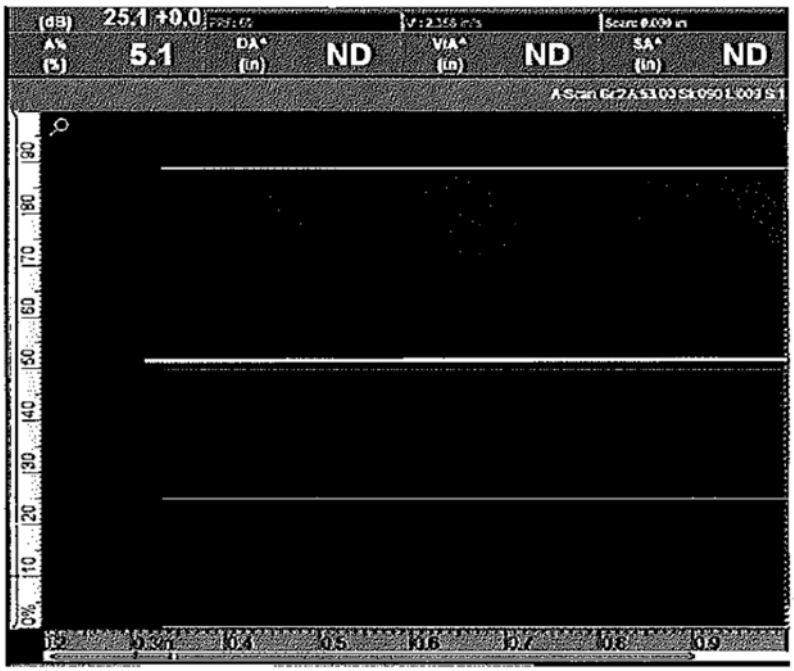

Figure 4. Sensitivity Levels

E. Encoder Calibration: The encoder shall be calibrated weekly and verified through daily in-process checks to be within 1% of measured length for a minimum of half the total scan length. Encoder resolution shall be configured so that data is taken at 0.04 inch increments or smaller.

11.3.12 EXAMINATION PROCEDURE

11.3.12.1. X and Y: Coordinates shall be identified prior to scanning as required in 6.26.1 and 6.26.2 (6.19.1 and 6.19.2).

11.3.12.2. Straight Beam Scanning: Straight beam phased array examination using an E-scan at 0° shall be performed over the entire base metal area through which sound must pass. This straight beam examination may be performed using a conventional UT probe.

A. Scanning shall be continuous over 100% of the area to be examined.

B. When a discontinuity is observed during general scanning, the instrument shall be adjusted to produce a first reflection from the opposite side of a sound area of the plate to 80% full screen height. This instrument setting shall be maintained during evaluation of the discontinuity condition. All areas that cause a 50% reduction in the back-wall reflection or greater shall be recorded.

C. Any indication evaluated as laminar reflectors in base material, which interfere with the scanning of examination volumes, shall require modification of the angle beam examination technique such that the maximum feasible volume is examined, and the modification shall be noted in the record of the examination. If any area of base metal exhibits total loss of back reflection or an indication equal to or greater than the original back reflection height is located in a position that will interfere with the normal weld scanning procedure, its size and location shall be determined and reported on the UT report, and an alternate weld scanning procedure shall be used.

11.3.12.3. Angle Beam Scanning: Automatic computer recording of essential ultrasonic data in the manner of line scans shall be performed down the axial length of each weld. Scanning shall be performed in accordance with the documented and approved scan plan.

A. Scanning Gain: Scanning may be performed at reference level sensitivity as configured in D, provided soft gain or color palette alterations are made during evaluation to aid in detection. If scanning is performed at reference level, soft gain shall be increased by 6dB or the color palette adjusted to end at 50% screen height during the evaluation of the weld data. If color palette adjustment or soft gain increase is not used, 6dB of additional gain over primary reference level shall be applied during scanning. For manual supplemental examinations such as for transverse flaw detection, scanning shall be a minimum of 6dB over reference level. Additional scanning gain when TCG is applied is intended to aide in detection for manual examinations. Most phased array equipment or evaluation software has the capabilities to increase gain (or similar with color palette adjustments) to serve the same purpose of aiding in detection of discontinuities. Additionally, gain settings greater than 6dB above SSL would produce saturated signals that would interfere with relevant signals for acceptance.

B. Encoded Scanning: Except as permitted in 11.3.10.4, scanning shall be done with an encoder. Encoded line scanning shall be performed by using a mechanical fixture or apparatus to help maintain fixed index offset positioning.

C. Scanning Speed: The indicated speed of acquisition which is established for the instrument for the given setup shall not be exceeded. If data dropout is noted, it shall not exceed 1% of the recorded data and no two consecutive lines of data shall be

missed. Exceeding the indicated scanning speed can cause data dropout.

D. Data Collection: The PAUT operator shall ensure that ultrasonic examination data is recorded in unprocessed form. A full and complete data recording set of the original A-scan data with no exclusionary gating or filtering other than receiver bandpass shall be included in the data record.

11.3.13 EVALUATION

11.3.13.1. Length Measurements: Indication length shall be determined by using the 6 dB drop method described in 6.31.2 (6.23.2). For saturated indications, in which the true peak amplitude measurement cannot be obtained, additional scans at lower gain levels shall be performed for Class B and C indications with near rejectable lengths or proximities to adjacent indications or weld intersections where applicable. The length may be determined from the stored data file.

11.3.13.2. Acceptance Criteria: Welds shall be acceptable provided they have no cracks, nor any indications whose amplitude or length exceeds that specified in Table 2 for the applicable weld stress category. Discontinuities shall be classified based on their maximum amplitude in accordance with the following. (Also see Figure 4.)

Table 2
PAUT Acceptance Criteria

Maximum Discontinuity Amplitude Level Obtained	Maximum Discontinuity Lengths by Weld Stress Category1	
	Statically Loaded	Cyclically Loaded
Class A (Greater than ARL)	None allowed	None allowed
Class B2,3 (Between SSL and ARL)	3/4 in	1/2 in
Class C2,3,4 (Between SSL and DRL)	2 in	Middle half of weld: 2 in
		Top or bottom quarter of weld: 3/4 in
Class D (Equal to or less than DRL)	Disregard	Disregard

Notes:
1. Indications characterized as cracks shall be considered unacceptable regardless of length or amplitude.
2. Class B and C indications shall be separated by at least 2L, L being the length of the longer indication, except that when two or more such indications are not separated by at least 2L, but the combined length of indications and their separation distance is equal to or less than the maximum allowable length under the provisions of Class B or C, the flaw shall be considered a single acceptable indication.
3. Class B and C shall not begin at a distance less than 2L from the weld ends carrying primary tensile stresses, L being the indication length.
4. For Class C, determination of depth of discontinuity shall be determined by the location of the peak amplitude, at the angle producing the maximum signal amplitude

Discontinuity Classification	Description1
A	Greater than ARL
B	Between ARL and SSL
C	Between SSL and DRL
D	Equal to or less than DRL

1 See11.3.11.2 D

11.3.13.3. Manual PAUT may be used to supplement the scan in order to determine whether a discontinuity is a crack. Characterizing defects as cracks is done by assessing the location of the indication, signal rise-fall time, pulse duration, echo dynamic patterns, and amplitude. If cracks are suspected but cannot be confidently characterized, alternate NDT methods should be used to help classify the indication. There are various resources and training available for defect characterization. One such resource is the ASME Boiler and Pressure Vessel Code, Section V, Nonmandatory Appendix P, “Phased Array (PAUT) Interpretation”.

11.3.13.4. Repair: Repairs to welds found unacceptable by PAUT shall be made in accordance with 5.26 (3.7). Repaired areas shall be retested using the same scan plan and techniques as used for the original inspection, unless the scan plan does not provide coverage of the repaired area. In this case, a new scan plan shall be developed for the repair area. The minimum length of the repair that shall be re-inspected shall be the length of the gouge plus 2 inches on each end.

11.3.14 DATA ANALYSIS

11.3.14.1. Validation of Coverage: Recorded data shall be assessed to ensure full execution of the scan plan over 100% of the required examination length.

11.3.14.2. Data Analysis and Recording Requirements: Following are requirements for evaluation of data.

A. The entire exam volume shall be analyzed, using gates and available cursors, to locate and identify the source, location and nature for all indications. Alternately, manual plotting may be used to augment on-board analysis, e.g., non-parallel or inconsistent geometries.

B. Responses resulting from weld root and weld cap geometries shall be investigated and the basis for this classification should be noted on the report form.

C. Any indication warranting evaluation shall be recorded so as to support the resultant disposition. The extent of recording shall be sufficient for reviewers and subsequent examiners to repeat the result and should stand alone as written record.

D. Rejectable indications shall be reported. The report shall include peak amplitude, indication rating, depth below the surface and relative position to provide adequate information for the repair. Cursor placement, measurement features, and annotations and comments shall clearly support disposition.

E. D1.5 only: For welds designated in the ***Contract Documents*** as being Fracture Critical, indication ratings which are up to and including 6 dB less critical (higher) than acceptance levels shall be recorded on the test report. Post-acquisition data analysis will result in numerous evaluative actions and manipulations intended to characterize indication responses from benign geometries and metallurgical responses. This process, by its nature, will require modification to ensure complete and systematic disposition of the examination record.

11.3.15 DATA MANAGEMENT

11.3.15.1. Data Management System: There shall be a data management scheme established consistent with job requirements and size.

11.3.15.2. File Nomenclature: A systematic file naming scheme shall be used to control data management of calibration and set-up files, phased array data files, and digitally generated data report forms.

11.3.15.3. Raw Data: All phased array data shall be saved in the original raw A-scan format.

11.3.15.4. Data Reviewing: Any review and evaluation of the phased array data shall not change or affect the original A-scan data.

11.3.16 DOCUMENTATION AND REPORTING

11.3.16.1. Reporting: Examination reports shall meet the requirements of 6.27.8 (6.20) and may be output from the on-board reporting feature of the phased array unit provided all necessary information is included. Reports may also be produced in the written manual UT conventional format or by external computer-generation.

A. D1.1: Reports shall note all rejectable indications, any use of non-encoded PAUT, welds that cannot be examined from both sides, indications that interfere with scanning, and responses from weld root and cap geometries.

B. D1.5: Reports shall note all rejectable indications, any use of non-encoded PAUT, welds that cannot be examined from both sides, indications that interfere with scanning, responses from weld root and cap geometries, and, for fracture-critical welds, indications required to be reported by 11.3.14.2 E.

If PAUT is being substituted for RT, the written report shall include, at a minimum, encoded C-scans covering the entire length inspected and A, C, sectorial, and side views of all reportable indications. All raw data for PAUT substituted for RT shall be retained for the same duration required for radiographic film. For retention requirements, measures may need to be taken so that the data remains readable (not only that the storage medium is intact but that there is software to read it). If PAUT is substituted for conventional UT, there is no requirement for retention of raw data, and the same requirements for retention of the report apply as for conventional UT.

11.3.16.2. Repairs: Results from rescans of repair welds shall be tabulated on the original form (if available) or additional report forms, and shall be indicated by the appropriate repair number (R1, R2, R3, etc.)

11.3.16.3. Scan Plan Reporting: The scan plan used during inspection shall accompany the report form.

11.3.17 SYSTEM LINEARITY VERIFICATION

11.3.17.1. General Requirements: Linearity verifications shall be conducted every 12 months and recorded on a form similar to that shown in Form 1. The verifications shall be conducted by a PAUT Level II or III, or, at the Contractor’s option, the equipment may be sent to the manufacturer for verification.

A. The phased array instrument shall be configured to display an A-scan presentation.

B. The time-base of the A-scan shall be adjusted to a suitable range to display the pulse-echo signals selected for the particular linearity verification to be performed. A standard IIW or other linearity block similar to that described in ASTM E 317 shall be selected to provide

signals to assess linearity aspects of the instrument (see Figure 6.18 (6.5)).

C. Pulser parameters shall be selected for the frequency and bandpass filter to optimize the response from the probe used for the linearity verifications.

D. The receiver gain shall be set to display non-saturating signals of interest for display height and amplitude control linearity assessments.

11.3.17.2. Display Height Linearity Verification Procedure

A. With the phased array instrument connected to a probe (shear or longitudinal) and coupled to any block that will produce two signals, adjust the probe such that the amplitude of the two signals are at 80% and 40% of the display screen height. This may be performed with an angle beam or 0° technique. The two signals may be obtained by using a block with multiple side drilled holes located close in proximity, multiple signals from radius as in a standard IIW/DSC block, or multiple thicknesses such as the DS block shown in Figure 6.23 (6.6). The probe is then manipulated to the optimum position over the reflectors to obtain a 2:1 signal ratio. Once the 2:1 ratio is established, the probe will remain in that position and gain adjustments are made to set the indications at the specified amplitude.

B. Increase the gain using the receiver gain adjustment to obtain 100% of full screen height of the larger response. The height of the lower response is recorded at this gain setting as a percentage of full screen height.

C. Reduce the height of the higher response in 10% steps to 10% of full screen height and record the height of the second response for each step.

D. Return the larger signal to 80% to ensure that the smaller signal has not drifted from its original 40% level due to coupling variation. Repeat the test if variation of the second signal is greater than 41% or less than 39% full screen height.

E. For an acceptable tolerance, the responses from the two reflectors should bear a 2 to 1 relationship to within ±3% of full screen height throughout the range 10% to 100 % (99% if 100% is saturation) of full screen height.

F. Record the results on an instrument linearity form as shown in Form 1.

11.3.17.3. Amplitude Control Linearity Verification Procedure

Each of the pulser-receiver components shall be checked to determine the linearity of the instrument amplification capabilities. For instruments configured to read amplitudes greater than can be seen on the display, a larger range of checkpoints may be used. For these instruments the gated output instead of the A-scan display shall be verified for linearity.

A. Select a flat (normal incidence) linear array phased array probe having at least as many elements as the phased array ultrasonic instrument has pulsers.

B. Using this probe, configure the phased-array ultrasonic instrument to have an E-scan at 0°. Each focal law will consist of one element. The scan will start at element number 1 and end at the element number that corresponds to the number of pulsers in the phased-array instrument.

C. Couple the probe to a suitable surface to obtain a pulse-echo response from each focal law. The backwall echo from the 1-in thickness of the IIW block or similar block provides a suitable target option. Alternatively, immersion testing may be used.

D. Select Channel 1 of the pulser-receivers of the phased-array instrument. Using the A-scan display, monitor the response from the selected target. Adjust the gain to bring the signal to 40% screen height.

E. Add gain to the receiver in the increments of 1 dB, then 2 dB, then 4 dB and then 6 dB. Remove the gain added after each increment to ensure that the signal has returned to 40% display height. Record the actual height of the signal as a percentage of the display height.

F. Adjust the signal to 100% display height, remove 6 dB gain and record the actual height of the signal as a percentage of the display height.

G. Signal amplitudes shall fall within a range of 63% of the display height required in the allowed height range of Form 1.

H. Repeat the sequence from D to G for all other pulser-receiver channels and record results on a linearity report form as shown in Form, 1.

11.3.17.4. Time-Base Linearity (Horizontal Linearity) Verification Procedure

A. Configure the phased array instrument to display an A-scan presentation using a 10 in range.

B. Select any longitudinal (compression) wave probe and configure the phased-array instrument to display a range obtaining at least ten multiple back reflections from the 1 in wall thickness of the calibration block.

C. Set the phased-array instrument analog-to-digital conversion rate to at least 80 MHz.

D. With the probe coupled to the block and the A-scan displaying 10 clearly defined multiples as illustrated in Figure 5, use the display software to assess the interval between adjacent backwall signals.

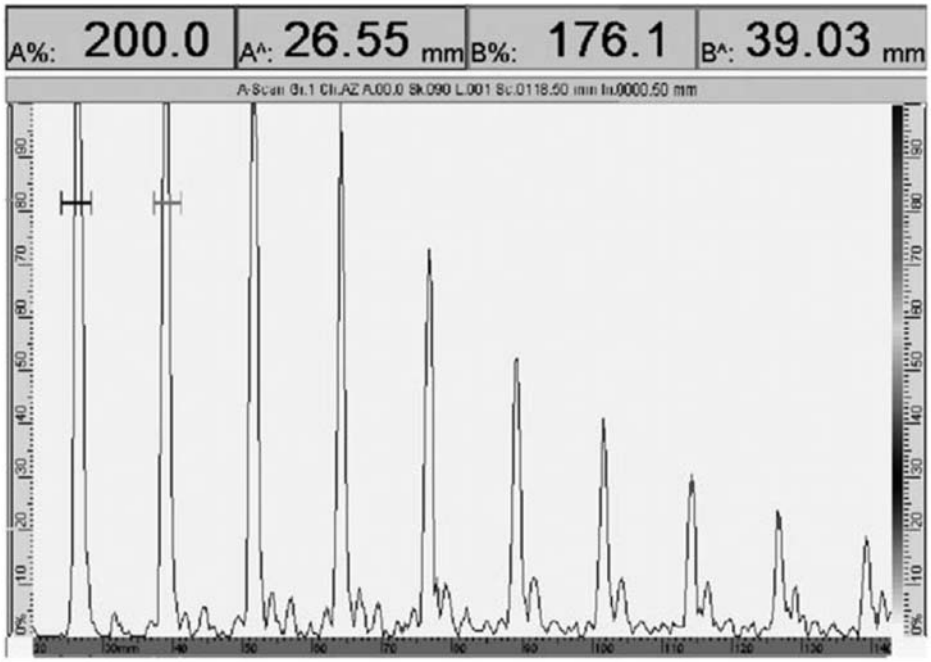

Figure 5. Example of Time Based Linearity Verification

E. Determine acoustic velocity of the test block by calibration (ASTM E494 may be used as a guide), enter the acoustic velocity in the display software, and configure the display to read out in distance (thickness).

F. Using the reference and measurement cursors, determine the interval between each multiple and record the interval of the first 10 multiples.

G. Each trace deflection shall be correct within 2% of the screen width.

11.3.18 TRAINING

11.3.19 FORMS

Form 1: Linearity Verification Report Form

Location:		Date:	
Operator:		Signature:	
Instrument:		Couplant:	
Pulser Voltage (V):	Pulse Duration (ns):	Receiver (band):	Receiver Smoothing:
Digitization Frequency (MHz):		Averaging	
Display Height Linearity		Amplitude Control Linearity	

Large %	Small Allowed Range %	Small Actual %	Ind. Height %	dB	Allowed Range %
100	47-53		40	+1	42-47
90	42-48		40	+2	48-52
80	40	40	40	+3	60-66
70	32-38		40	+4	77-83
60	27-33		40	+6	47-53
50	22-28				
40	17-23				
30	12-18				
20	7-13				
10	2-8				

Amplitude Control Linearity Channel Results: (Note any channels that do not fall in the allowed range)

Channel (Add more if required for 32 or 64 pulser-receiver units)

1	2	3	4	5	6	7	8	9	10	11	12	13	14	15	16

Time Based (Horizontal) Linearity (for 1 in. IIW Blocks)

Multiple	1	2	3	4	5	6	7	8	9	10
Thickness	1 in.	2 in.	3 in.	4 in.	5 in.	6 in.	7 in.	8 in.	9 in.	10 in.
Measured Interval										
Allowed deviation (Yes/No)										