State of Florida
Department of Transportation

WOOD CHIPPER: DRUM TYPE, TRAILER MOUNTED

ITB-DOT-14/15-9044-RC

EFFECTIVE DATES
July 1, 2015 to June 30, 2018

VENDOR

Vermeer Southeast Sales – CR6523

PRICE SHEET

5/26/2015

(Page 1)

BID #: ITB-DOT-14/15-9044-RC **FOB:** STATE WIDE

BID TITLE: WOOD CHIPPER, DISC-TYPE, TRAILER MOUNTED

ITEM #	ITEM	PRICE
1	**Wood Chipper, Trailer Mounted (4i engine)** Make: VERMEER Model: BC1500 Type: Drum	**$50,247.00**

ITEM #	ITEM	PRICE
2	**Wood Chipper, Trailer Mounted (4f engine)** Make: VERMEER Model: BC1500 Type: Drum	**$56,091.00**

OPTIONAL ITEMS

5/25/2015

Optional Item #	Item	Price
3	**Articulating Curbside Feed Feature (Spec 4.1)** Make: VERMEER Model: JSK-01404	**$3,577.00**
4	**Automatic Feed Control (Spec 4.2)** Make: VERMEER Model: SMART FEED	**$N/C included**
5	**Extra Set of Knives (Spec 4.3)** Make: VERMEER Model: 156811009	**$129.71**
6	**Power Rotation on Discharge Chute (Spec 4.4)** Make: VERMEER Model: BC1500-080	**$2,737.00**
7	**Hydraulic Winch (Spec 4.5)** Make: VERMEER Model: BC1500-029	**$4,063.00**

DELIVERY: Delivery will be made within 7-10 days after receipt of Purchase Order.

Is this product available with recycled content? __Yes **X** No If yes, please send information separate from this Invitation to Bid (See Recycled Material Special Condition for more information).

RENEWAL: see Introduction Section #7.
THE UNIT PRICE(s) WILL APPLY TO THE INITIAL TERM AND ANY RENEWAL PERIODS.

MFMP Transaction Fee: All payment(s) to the vendor resulting from this competitive solicitation **WILL** be subject to the 1% MFMP Transaction Fee in accordance with the attached Form PUR 1000 General Contract Condition #14.

NOTE: In submitting a response, the bidder acknowledges they have read and agree to the solicitation terms and conditions and their submission is made in conformance with those terms and conditions.

ACKNOWLEDGEMENT: I certify that I have read and agree to abide by all terms and conditions of this solicitation and that I am authorized to sign for the bidder. I certify that the response submitted is made in conformance with all requirements of the solicitation.

Bidder: VERMEER SOUTHEAST FEID# 59-1156297-002

Address: 4559 Old Winter Garden Road City, State, Zip: Orlando, FL 32811 .

Phone: 407-295-2020 Fax: 407-293-8087 E-mail: craig@vermeersoutheast.com

Authorized Signature:_____ Date: June 8, 2015

Printed/Typed: Craig Sunberg Title: R. M. .

Ordering Instructions

VERMEER SOUTHEAST SALES
CONTRACT #: CR6523

Bid #: ITB-DOT-14/15-9044-RC
Title: WOOD CHIPPER, TRAILER MOUNTED

***NOTE - ALL ORDERS SHOULD BE DIRECTED TO:**

FEDERAL EMPLOYER IDENTIFICATION NUMBER (FEID): F591156297-002

VENDOR: Vermeer Southeast Sales

ADDRESS: 4599 Old Winter Garden Road

CITY, STATE, ZIP: Orlando FL 32811

TELEPHONE: (407) 295-2020

TOLL FREE #:(800) 432-0810 **FAX #**: (407) 293-8087

DELIVERY: Delivery will be made within 7-10 days after receipt of Purchase Order

PRODUCT INFORMATION

Direct Questions To:

NAME & TITLE: Craig Sunberg, R. M.

ADDRESS: 4599 Old Winter Garden Road

CITY, STATE, ZIP: Orlando FL 32811

TELEPHONE: (407) 295-2020

TOLL FREE #:(800) 432-0810 **FAX #**: (407) 293-8087

INTERNET E-MAIL ADDRESS: craig@vermeersoutheast.com

INTERNET WEBSITE URL: www.vermeersoutheast.com

Will you accept the State of Florida Purchasing Card (VISA)? ____Yes **_X_ No**

EXHIBIT "1"
(REVISED 5/26/15)

EQUIPMENT SPECIFICATIONS COMPLIANCE VERIFICATION SHEETS*
FLORIDA DEPARTMENT OF TRANSPORTATION

Specification Number: **FC3600** Date: **April 3, 2015**
Unit of Equipment: Wood Chipper, Disc-Type, Trailer Mounted

ATTENTION PROSPECTIVE SUPPLIERS:
In order for your bid on this equipment to be considered, all questions in this specification must be answered and all information asked for must be supplied. Incomplete or inappropriate (i.e., responding "yes" or "no" when specific information is asked for) responses may result in your bid being rejected.

***NOTE: THESE COMPLIANCE VERIFICATION SHEETS MUST BE SUBMITTED WITH YOUR BID RESPONSE PACKET.**

1.0 INTENT:

The intent of this specification is to provide minimum procurement requirements for a trailer mounted, disc or drum type wood chipper. The unit required and covered by this specification shall be the manufacturer's latest basic production model and shall be equipped with all standard equipment in accordance with the manufacturer's latest literature, a copy of which must accompany the bid. No prototypes are allowed. The unit bid must have basically been in production for a minimum of one year.

YES
Understand and Acknowledge?
(Yes/No)

This contract will not be awarded until the FDOT Office of Maintenance is satisfied that the equipment proposed will meet the specification in every way. This may require interviews, documentary evidence, an equipment demonstration and inspection at an FDOT location of our choosing, or any combination of the above. Prospective suppliers will be expected to be fully cooperative with providing any reasonable evidence of specification compliance by the above methods. A maximum of 30 days between bid opening and contract award may be required for this process. After contract award, specification compliance will be reconfirmed by inspection, documentation, and demonstration when the first and subsequent items are delivered, prior to acceptance. **(See Section 6.0)**

YES
Understand and Accept?
(Yes/No)

1.1 DEFINITIONS:

"Approved Equivalent". Bidders may substitute components for those listed only if written approval (FAX is permitted) is granted by the Florida Department of Transportation Mobile Equipment Manager or his designee prior to bid opening. If this has not been accomplished by bid opening time, your bid will be rejected. The FDOT assumes no responsibility for responding to requests for approval of alternates in time for bid opening, as a technical evaluation frequently must be performed. Therefore, bidders are cautioned that quoting of the components listed may be advisable if lead time is short.

Note: Inadvertent acceptance of previous bids with alternate components shall not be construed as FDOT approval of such alternate components.

YES
Understand and Acknowledge?
(Yes/No)

Manufacturer's model numbers: when a manufacturer's model number is stated, it is understood that design changes to the stated model by the manufacturer are not subject to the control of the FDOT and that the intent is to procure an item substantially identical to that version last procured by, demonstrated to, or otherwise brought to the attention of the FDOT. It is explicitly understood that it is the responsibility of the bidder to notify the FDOT of any changes of consequence. Please contact the person named on the bid documents for information regarding the last model for which information is on record with the FDOT bid evaluators.

YES
Understand and Acknowledge?
(Yes/No)

"Heavy Duty". This term means that the design and construction of the item is sufficiently rugged and has adequate safety factor to stand up to the sort of use typically expected to be experienced by FDOT drivers/operators without structural or functional failure or other consequences such that the item causes or will probably cause excessive down time. The Mobile Equipment Manager or his designee may accept or reject items bid based on his judgment of compliance with this provision without the necessity for a field trial, or may require testing and verification at his discretion.

YES
Understand and Acknowledge?
(Yes/No)

"Per (spec)". Whenever a specification such as **SAE, OSHA, or FED-STD** (but not limited to those) is referred to, the latest version as of the date of bid opening is the version to be used. If an update takes place between the time of bid opening and equipment delivery, the successful bidder and the FDOT will mutually agree in writing on which version shall prevail unless there are statutory requirements that the new version be used.

YES
Understand and Acknowledge? (Yes/No)

2.0 **GENERAL:** The unit shall be the latest model, disc or drum type wood chipper, capable of chipping brush and trees up to a diameter of **15" inches**. State make and model bid.

VERMEER BC1500
Make/Model?

YES
Comply? (Yes/No)

2.1 **ENGINE:**

2.1.1 The engine shall be a liquid cooled, four cycle diesel with a minimum of **120 HP** per **SAE J1349**.

Cummins 4.5L T4i
Make/Model?

130 HP.
HP?

2.1.2 The cooling system shall be filled with the manufacturer's recommended ratio of permanent type antifreeze.

YES
Comply? (Yes/No)

2.1.3 A fuel tank shall be provided with minimum capacity of **40 gal**. A fuel level indicator shall be provided.

45 GALLONS
Tank Capacity?

YES
Comply? (Yes/No)

2.2 **ELECTRICAL SYSTEM:**

2.2.1 A **12v** starting and charging system with a minimum **65 amps** shall be provided.

65 AMPS
Alternator Output? (Amps)

YES
Comply? (Yes/No)

2.2.2 Battery capacity shall be minimum **950 CCA** at **0 deg. Fahrenheit**.

950 CCA
CCA?

YES
Comply? (Yes/No)

2.2.3 A control panel with key ignition switch, throttle, ammeter or voltmeter, tachometer, engine oil pressure gauge, coolant temperature gauge, and hour meter shall be provided. The controls panel shall have a locking cover to discourage vandalism.

YES
Comply? (Yes/No)

2.2.4 A low oil pressure, high coolant temperature shutdown system shall be provided.

YES
Comply? (Yes/No)

3.0 CHIPPER ASSEMBLY:

3.1 FEED SYSTEM

3.1.1 Material shall be fed into the chipper by means of variable speed rollers.

YES
Comply? (Yes/No)

3.1.2 The feed rate shall be adjustable from **0 to 120 f/min**.

122 F/min
Feed Rate?

3.1.3 An emergency stop and reversing control shall be within easy reach of the operator when feeding material into the chipper.

YES
Comply? (Yes/No)

3.1.4 Minimum distances to feed roller pinch points are measured as shown on **Figure 1**. Dimension **"R"** for side and top guards, Dimensions **"A"**, feed table length, and **"B"**, table height, and all other dimensions shall meet all applicable regulations and standards.

30.1"	67.4"	27.2"	YES
Dimension "R"	Dimension "A"	Dimension "B"	Comply? (Yes/No)

3.2 **CUTTING DISC OR DRUM STYLE**

3.2.1 The cutting disc or drum shall be all steel with a minimum diameter of **22 inches** and a minimum thickness of **1.5 inches for the disc style or 22 inches in width for the drum style**.

DRUM 22.5"	YES
Chipper Style and Dimensions?	Comply? (Yes/No)

3.2.2 The cutting disc shall have a minimum of **four knives** or **two knives** minimum for the drum style.

YES
Comply? (Yes/No)

3.2.3 The cutting disc shall be mounted on a heavy-duty steel shaft supported by heavy-duty, high-speed, anti-friction bearings.

YES
Comply? (Yes/No)

3.3 **DISCHARGE CHUTE**

3.3.1 The discharge chute shall be capable of a minimum rotation of **270° degrees**.

YES
Comply? (Yes/No)

3.3.2 The discharge chute shall have a lock mechanism to prevent movement during operation.

YES
Comply? (Yes/No)

3.3.3 An adjustable deflector on the chute shall be provided to alter angle of chip discharge.

YES
Comply? (Yes/No)

3.4 **TRAILER**

3.4.1 The frame and tongue shall be all-welded steel construction with protective fenders over the wheels. The trailer tongue length shall be adjustable.

YES
Comply? (Yes/No)

3.4.2 A heavy-duty Pintle hitch with safety chains shall be provided with a towing capacity that meets or exceeds the gross weight of the unit.

YES
Comply? (Yes/No)

3.4.3 The trailer axle shall be rated to safely support the gross weight of the unit while being transported at **65 mph**.

7,000 LBS
Axle GAWR?

YES
Comply? (Yes/No)

3.4.4 Tires and wheels supplied shall be adequate to safely carry the gross weight of the unit at **65 mph**.

LT 285/75R16 LR-E
Tire Size? / Load Rating?

YES
Comply? (Yes/No)

3.4.5 The trailer shall be equipped with a screw type parking stand.

YES
Comply? (Yes/No)

3.4.6 The trailer shall be equipped with a spare tire and wheel, mounted and inflated.

LT 285/75R16 LR-E
Tire Size? / Load Rating?

YES
Comply? (Yes/No)

3.4.7 Trailer lights and reflectors shall be in accordance with Federal Motor Vehicle Safety Standards.

YES
Comply? (Yes/No)

3.4.8 Electric service brakes shall be provided with a breakaway device.

YES
Comply? (Yes/No)

3.4.9 A **7-pin** trailer light connector per **SAE J560b** shall be provided.

YES
Comply? (Yes/No)

3.4.10 A heavy-duty locking tool box shall be provided on the trailer. Special tools required to service the unit shall also be provided.

YES
Comply? (Yes/No)

4.0 **OPTIONS:**
(May or may not be purchased at discretion of the FDOT. Option price will not be considered as basis of award.)

4.1 Provide articulating curbside feed feature.

$ 3,577.00
Cost

4.2 Provide automatic feed control that prevents lugging engine during heavy use and improves production.

$ N/C INCLUDED
Cost

4.3 Provide extra set of knives.

$ 129.71
Cost

4.4 Provide power rotation on discharge chute.

$ 2,737.00
Cost

4.5 Provide hydraulic winch capable of lifting material up to 2,000 lbs.

$ 4,063.00
Cost

5.0 **PAINTING:**

The paint system for the unit should include the following steps, as a minimum:

1. All surfaces shall be smooth with welding slag, burrs and sharp edges removed.
2. All surfaces shall be primed with a rust inhibitive primer compatible with the finish paint.
3. All primed surfaces shall receive two (2) coats of premium grade automotive enamel to match **Yellow Number 13538 of Federal Standard 595 (DuPont L9069A** or equal)
4. All painted components shall be warranted for rust-through for **two years** except where paint has been scratched or removed.

NOTE: If requested, a paint chip **will** be furnished to the successful bidder by the FDOT.

YES
Comply? (Yes/No)

6.0 **CONDITIONS:**

Terms and conditions set forth in the bid documents will overrule this specification when there is disagreement between the specification and bid documents.

6.1 Regardless of the destination specified on the Purchase Order, the first item procured under this specification shall be delivered to the FDOT Midway Maintenance yard, **0.1 mile north of I-10 and Highway 90 west, Tallahassee**, Florida. The person(s) named at the end of this specification shall be notified of this delivery **7-10** calendar days in advance. Following delivery, the unit will be thoroughly inspected for compliance with these specifications. Items found to not be in compliance will be corrected by supplier and brought into compliance before final acceptance. The unit will then be taken by the supplier to the Purchase Order destination. All subsequent units will be inspected under the same terms at their Purchase Order destinations.

YES
Comply? (Yes/No)

6.2 In addition to equipment specified, **unit** shall be equipped with all standard equipment as specified by the manufacturer for commercial equipment of this model, and shall comply with all Motor Vehicle Safety Standards as established by the **U. S. Department of Transportation**, all safety requirements of the latest issues of **ANSI** Standards and **OSHA** Standards, and all other required Federal and State of Florida legal requirements and safety standards.

YES
Comply? (Yes/No)

6.3 Bidders must submit two (**2**) copies of current manufacturer's data to substantiate compliance with the specifications, and a list of dealers in or near Florida.

YES
Comply? (Yes/No)

7.0 TRAINING AND MANUALS:

7.1 Two (2) manufacturer's operator manuals, two (2) manufacturer's parts manuals, and two (2) each lubrication instructions and maintenance instructions manuals to be delivered with each unit.

YES
Comply? (Yes/No)

7.1.2 The supplier will provide a checklist for periodic preventive maintenance suitable for reproduction on **8 ½** by **11** paper.

YES
Comply? (Yes/No)

7.2 The supplier shall ensure that all service bulletins, recall notices, and/or other service or maintenance information for the reasonable life of the machines supplied are sent to the FDOT shop to which the machines are assigned.

YES
Comply? (Yes/No)

7.3 The services of a factory technician, thoroughly trained in the use and operation of the unit, shall be furnished for a period of not less than one (**1**) day, to instruct personnel in the use, operation and maintenance of the unit after delivery. This is to be done at the delivery location.

YES
Comply? (Yes/No)

8.0 **WARRANTY:**

8.1 The manufacturer shall warrant all components, including those not of its manufacture for a minimum of two years. Date of warranty is to be date of acceptance by FDOT. **The successful bidder shall act as FDOT's agent regarding any warranty claim on subcontractor warranted components. In the event of a warranty claim of this nature, the FDOT will deal only with the prime supplier of this item. Any negotiations with subcontractors will be handled by the prime supplier.**

YES
Comply? (Yes/No)

8.2 The warranty shall include, as a minimum, parts and labor at FDOT's facility. If necessary, transport to vendor's service facility shall be permitted, however vendor is responsible for pick-up and delivery back to FDOT's facility with a minimum down time.

YES
Comply? (Yes/No)

8.3 Difficulties in obtaining warranty service or excessive downtimes will result in the cancellation of this contract and any open purchase orders at that time.

YES
Comply? (Yes/No)

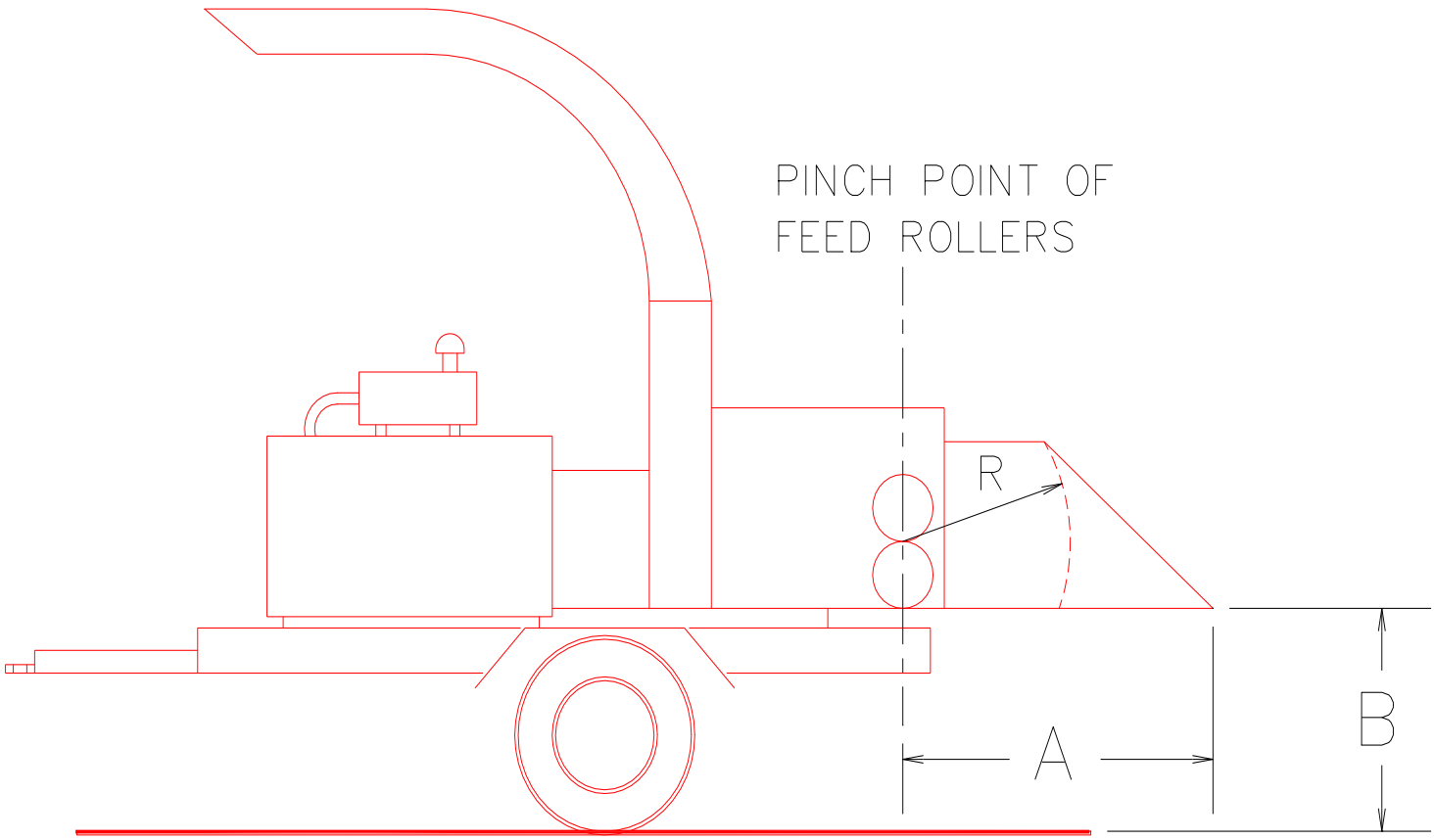
PINCH POINT OF
FEED ROLLERS
R
A
B

Vermeer BC1500 Tier 4i (Stage IIIB) Brush Chipper
Bid Specifications

General

Unit shall be a trailer mounted drum chipper in the 15" (38.1 cm) capacity class. Length of basic unit shall not exceed 197" (500 cm) when in transport configuration (feed table up/tongue extended) or 217" (551 cm) maximum length (feed table down/tongue extended). Minimum length shall be approximately 179" (455 cm) (table up/tongue retracted). Overall height shall be no more than 104" (264 cm). Maximum weight of the unit shall not be more than 6907 lb (3133 kg) in a standard configuration.

Engine

Shall be an industrial, liquid cooled, diesel engine equal to a Cummins QSB4.5 Turbocharged Tier 4i (Stage IIIB), 130 hp (96.9 kW) at 2500 rpm [459 ft-lb. (622 Nm) of torque at 1500 rpm] with a maximum displacement of 272 in^3 (4.5 L). Engine shall be equipped with a spin-on replaceable oil filter. Unit shall be equipped with a fuel tank with a minimum capacity of 45 gal (170.3 L). Unit shall be equipped with a 12 volt, 950 CCA battery and a 65 amp alternator.

Trailer

Trailer frame shall be constructed of 1/4" (6 mm) Z channel. Suspension shall be a rubber torsion-type with a minimum 7000 lb (3175.1 kg) rating. Wheels shall be 16" x 8" (40.6 cm x 20.3 cm) with 8 bolts on a 6.5" (16.5 cm) circle. Tires shall be equal to LT285/75R16 Load Range E. Hitch shall adjust up and down 8" (20.3 cm). Unit shall be equipped with electric brakes and emergency breakaway switch. Unit shall be equipped with two towing safety chains with a minimum thickness of 5/16" (8 mm) and latching hooks. Trailer shall be equipped with a jack with a minimum capacity of 3500 lb (1587.8 kg).

Cutting System

Cutting system shall be drum-style with a minimum drum size of 22.5" in diameter and 22" in width (57.2 cm x 55.9 cm). Drum shall have two safety lock positions for changing drum knives. Drum shall weigh approximately 540 lb (244.9 kg) (including shaft). Drum shall have two knives, bolted in place with a minimum of three bolts per knife. Knife size shall be 5" by 8" (14 x 20.3 cm) with a minimum thickness of 5/8" (1.6 cm). Knives shall be double edged. Knives shall be constructed of A8 chipper steel.

Feed System

Unit shall be equipped with a hydraulic infeed system. Feed system shall have two vertical feed rollers with a helical knife pattern, having a minimum diameter of 20.9" and minimum height of 20" (53.1 cm x 50.8 cm) each. Rollers shall be powered by two hydraulic motors with a minimum displacement of 28.3 in^3 (463.8 cm^3). Unit shall have an adjustable feed rate with a maximum feed speed rate of 122 fpm (37 m/min). Feed table shall have a minimum length of 67.4" (171.2 cm) from feed roller nip point to end of table and a minimum feed height above ground of 27.2" (69.1 cm). Unit shall be equipped with a system that senses loss of rpm from engine and automatically stops feed system until rpm of engine recovers and then automatically feeding of material restarts without any operator interface. Infeed shall include curtains to dampen noise and reduce thrown objects.

Clutch

Unit shall be equipped with a 13" (33 cm) automotive-style – self-adjusting clutch. Clutch engagement linkage shall be incorporated into throttle system so that clutch can only be engaged at a low engine idle.

SmartFeed

Unit shall be equipped with an automatic engine speed monitoring system that senses speed of engine. SmartFeed system shall automatically control feeding of material into cutter system according to engine rpm's. This system shall have the ability to reverse material automatically and in turn restart feeding process without any operator interface once the engine returns to a preset rpm.

Discharge System

Chute must be no less than 104" (264.2 cm) high. Rotation must be limited to 270° rotation and controlled with rotating handle. Chute rotation must be self-locking in all positions.

Ecoidle™ Engine Control System

Unit shall be equipped with an engine control system which automatically lowers engine speed if material has not been chipped for 60 seconds or 5 minutes dependent on operator selection. Engine speed is increased either by changing the throttle setting or resetting the green Hold-to-Run button on either side of the unit.

Bottom Feed Stop Bar/Upper Feed Control Bar

The unit shall be equipped with a bottom feed stop bar located on the leading edge of the feed table. The bottom feed stop bar shall be strategically located to make it possible for the operator's leg to strike the bar and shut off the feed either intentionally or automatically in an emergency situation. A green button shall be positioned within reach of each side of the feed table to restart the feed roller and momentarily (30 second maximum) override the bottom feed stop bar if so required by the operator. The upper feed control bar shall be a four-position bar used to control the rotational direction of the feed rollers (forward, reverse and two neutral/stop positions). The bottom bar and upper feed control bar shall be painted red and the bottom bar shall have two sensitivity settings.

Hydraulic System

Unit shall be equipped with live-type hydraulics (hydraulic pump runs directly from engine). System shall be open center with a return-type filtration system, as well as a suction strainer in hydraulic tank. Pump shall have a minimum capacity of 5.5 gal/min (21 L/min) at maximum rpm with a relief pressure of 2800 psi (193 bar). Unit shall have a hydraulic tank with a 12 gal (45.4 L) capacity.

Instrumentation/Storage

Primary machine controls shall be located near the infeed chute. The unit shall have an hour meter, fuel gauge and automatic high temperature/low oil pressure engine shutdown. The unit shall have a lockable battery location, lockable toolbox and lockable fuel fill.

Manuals/Instructions

A full set of operator's, maintenance and parts manuals shall be supplied with the machine. A cabled operator's manual printed on water-resistant paper placed in a weather tight storage box shall be provided near the control panel. An operations and safety video (DVD) shall be supplied with each machine.

OPTIONS

Hydraulic rotating chute and deflector (controlled from both sides of machine)
Instrument vandal cover
Special paint
Winch (weight of machine shall be approximately 7250 lb (3288.5 kg)
Extended warranty
Preventive maintenance programs
Biodegradable hydraulic oil

Bid specifications last updated: 7/5/12

Vermeer Corporation reserves the right to make changes in its engineering, design and specifications; add improvements; or discontinue manufacturing at any time without notice or obligation.
© 2012 Vermeer Corporation.
All Rights Reserved.

Vermeer BC1500 Tier 4i (Stage IIIB) Brush Chipper
Bid Specifications

General

Unit shall be a trailer mounted drum chipper in the 15" (38.1 cm) capacity class. Length of basic unit shall not exceed 197" (500 cm) when in transport configuration (feed table up/tongue extended) or 217" (551 cm) maximum length (feed table down/tongue extended). Minimum length shall be approximately 179" (455 cm) (table up/tongue retracted). Overall height shall be no more than 104" (264 cm). Maximum weight of the unit shall not be more than 6907 lb (3133 kg) in a standard configuration.

Engine

Shall be an industrial, liquid cooled, diesel engine equal to a Cummins QSB4.5 Turbocharged Tier 4i (Stage IIIB), 130 hp (96.9 kW) at 2500 rpm [459 ft-lb. (622 Nm) of torque at 1500 rpm] with a maximum displacement of 272 in^3 (4.5 L). Engine shall be equipped with a spin-on replaceable oil filter. Unit shall be equipped with a fuel tank with a minimum capacity of 45 gal (170.3 L). Unit shall be equipped with a 12 volt, 950 CCA battery and a 65 amp alternator.

Trailer

Trailer frame shall be constructed of 1/4" (6 mm) Z channel. Suspension shall be a rubber torsion-type with a minimum 7000 lb (3175.1 kg) rating. Wheels shall be 16" x 8" (40.6 cm x 20.3 cm) with 8 bolts on a 6.5" (16.5 cm) circle. Tires shall be equal to LT285/75R16 Load Range E. Hitch shall adjust up and down 8" (20.3 cm). Unit shall be equipped with electric brakes and emergency breakaway switch. Unit shall be equipped with two towing safety chains with a minimum thickness of 5/16" (8 mm) and latching hooks. Trailer shall be equipped with a jack with a minimum capacity of 3500 lb (1587.8 kg).

Cutting System

Cutting system shall be drum-style with a minimum drum size of 22.5" in diameter and 22" in width (57.2 cm x 55.9 cm). Drum shall have two safety lock positions for changing drum knives. Drum shall weigh approximately 540 lb (244.9 kg) (including shaft). Drum shall have two knives, bolted in place with a minimum of three bolts per knife. Knife size shall be 5" by 8" (14 x 20.3 cm) with a minimum thickness of 5/8" (1.6 cm). Knives shall be double edged. Knives shall be constructed of A8 chipper steel.

Feed System

Unit shall be equipped with a hydraulic infeed system. Feed system shall have two vertical feed rollers with a helical knife pattern, having a minimum diameter of 20.9" and minimum height of 20" (53.1 cm x 50.8 cm) each. Rollers shall be powered by two hydraulic motors with a minimum displacement of 28.3 in^3 (463.8 cm^3). Unit shall have an adjustable feed rate with a maximum feed speed rate of 122 fpm (37 m/min). Feed table shall have a minimum length of 67.4" (171.2 cm) from feed roller nip point to end of table and a minimum feed height above ground of 27.2" (69.1 cm). Unit shall be equipped with a system that senses loss of rpm from engine and automatically stops feed system until rpm of engine recovers and then automatically feeding of material restarts without any operator interface. Infeed shall include curtains to dampen noise and reduce thrown objects.

Clutch

Unit shall be equipped with a 13" (33 cm) automotive-style – self-adjusting clutch. Clutch engagement linkage shall be incorporated into throttle system so that clutch can only be engaged at a low engine idle.

SmartFeed

Unit shall be equipped with an automatic engine speed monitoring system that senses speed of engine. SmartFeed system shall automatically control feeding of material into cutter system according to engine rpm's. This system shall have the ability to reverse material automatically and in turn restart feeding process without any operator interface once the engine returns to a preset rpm.

Discharge System

Chute must be no less than 104" (264.2 cm) high. Rotation must be limited to 270° rotation and controlled with rotating handle. Chute rotation must be self-locking in all positions.

EcoIdle™ Engine Control System

Unit shall be equipped with an engine control system which automatically lowers engine speed if material has not been chipped for 60 seconds or 5 minutes dependent on operator selection. Engine speed is increased either by changing the throttle setting or resetting the green Hold-to-Run button on either side of the unit.

Bottom Feed Stop Bar/Upper Feed Control Bar

The unit shall be equipped with a bottom feed stop bar located on the leading edge of the feed table. The bottom feed stop bar shall be strategically located to make it possible for the operator's leg to strike the bar and shut off the feed either intentionally or automatically in an emergency situation. A green button shall be positioned within reach of each side of the feed table to restart the feed roller and momentarily (30 second maximum) override the bottom feed stop bar if so required by the operator. The upper feed control bar shall be a four-position bar used to control the rotational direction of the feed rollers (forward, reverse and two neutral/stop positions). The bottom bar and upper feed control bar shall be painted red and the bottom bar shall have two sensitivity settings.

Hydraulic System

Unit shall be equipped with live-type hydraulics (hydraulic pump runs directly from engine). System shall be open center with a return-type filtration system, as well as a suction strainer in hydraulic tank. Pump shall have a minimum capacity of 5.5 gal/min (21 L/min) at maximum rpm with a relief pressure of 2800 psi (193 bar). Unit shall have a hydraulic tank with a 12 gal (45.4 L) capacity.

Instrumentation/Storage

Primary machine controls shall be located near the infeed chute. The unit shall have an hour meter, fuel gauge and automatic high temperature/low oil pressure engine shutdown. The unit shall have a lockable battery location, lockable toolbox and lockable fuel fill.

Manuals/Instructions

A full set of operator's, maintenance and parts manuals shall be supplied with the machine. A cabled operator's manual printed on water-resistant paper placed in a weather tight storage box shall be provided near the control panel. An operations and safety video (DVD) shall be supplied with each machine.

OPTIONS

Hydraulic rotating chute and deflector (controlled from both sides of machine)
Instrument vandal cover
Special paint
Winch (weight of machine shall be approximately 7250 lb (3288.5 kg)
Extended warranty
Preventive maintenance programs
Biodegradable hydraulic oil

Bid specifications last updated: 7/5/12

Vermeer Corporation reserves the right to make changes in its engineering, design and specifications; add improvements; or discontinue manufacturing at any time without notice or obligation.
© 2012 Vermeer Corporation.
All Rights Reserved.

Vermeer Southeast Locations

4559 Old Winter Garden Rd.
Orlando, FL 32811
Phone: 407.295.2020
Toll Free: 1.800.432.0810
Fax: 407.293.8087

1060 West Industrial Avenue
Boynton Beach, FL 33426
Phone: 561.742.7400
Fax: 561.742.7448

12785 N 44th St.
Clearwater, FL 33762
Phone: 727.299.9207
Toll Free: 1.877.299.9207
Fax: 727.299.0166

2231 Flint Dr.
Ft. Myers, FL 33916
Phone: 239.337.5900
Toll Free: 1.800.336.5901
Fax: 239.337.5901

11550 Philips Hwy.
Jacksonville, FL 32256
Phone: 904.262.4400
Toll Free: 1.800.873.4404
Fax: 904.262.0619

6691 Mobile Highway
Pensacola, FL 32526
Phone: 850.944.8110
Toll Free: 1.877.344.9963
Fax: 850.944.8166

BC1500 TIER 4i
BRUSH CHIPPER

HELP IMPROVE CHIPPING PRODUCTIVITY. The SmartFeed system monitors engine rpm and automatically stops and reverses the feed rollers to enhance production. This system also senses feedroller jams and manipulates the material automatically to reduce the need for manual control bar use.

EASILY LIFT HEAVY MATERIAL. An optional winch allows operators to move large logs effortlessly. The 150' (45.7 m) winch line can handle logs up to 2000 lb (907.2 kg) and can automatically lift the log onto the feed table.

OPERATOR SAFETY. Combined with the patented Bottom Feed Stop Bar is a four-position upperfeed control bar with dual stop positions and forward/reverse feed positions. Mounted over the feed table, this enables the operator to stop the feed rollers and select forward or reverse operations. Dual reset/hold-to-run buttons allow the operator to readily reset both bars.

SMOOTH FEEDING. Vertical feed rollers with helical cleats help hold material firmly to the infeed table which reduces vibration, shock and structural loading to the rear of the machine.

ECOIDLE™

ECOIDLE™ ENGINE CONTROL SYSTEM. When the Ecoidle function is selected by the operator, the engine speed automatically lowers to a preset rpm after 60 seconds or 5 minutes of inactivity to help reduce fuel consumption when not chipping material. Due to this idling, noise and greenhouse emissions are also reduced.

3 YEAR/ 3000 HOUR WARRANTY

EXTENDED WARRANTY. The 3-year/3000-hour extended warranty on drum housings, cutter drums, shaft and ring-fetter hubs offers you peace of mind, in addition to the 1-year/1000-hour Vermeer equipment limited warranty.

VERMEER.COM

Vermeer

EQUIPPED TO DO MORE.™

INTRODUCTION SECTION

1) INVITATION

The purpose of this Invitation to Bid is to obtain competitive bids to establish a three (3) year contract for the purchase of WOOD CHIPPER, DISC-TYPE, TRAILER MOUNTED by the Department of Transportation, hereafter referred to as the "Department". The contract will become effective on the date the successful bidder(s) is approved for award and will expire three (3) years from that date. After the award, said bidder(s) will be referred to as the "Vendor(s)".

All commodities identified in this Invitation to Bid will be subject to the availability of identical commodities as provided by mandatory Department of Management Services' State Contract(s) at such time these commodities become available. In the event of duplication(s) of commodities, the Department of Management Services' mandatory State Contract shall prevail.

2) TIMELINE

Provided below is a list of critical dates and actions. These dates are subject to change. Notices of changes (Addenda) will be posted on the Florida Vendor Bid System at www.myflorida.com (click on "BUSINESS", click on "Doing Business with the State", under "Everything for Vendors and Customers", click on "Vendor Bid System (VBS)", click on "Search Advertisements") under this bid number. It is the responsibility of all potential bidders to monitor this site for any changing information prior to submitting your bid.

ACTION / LOCATION	DATE	LOCAL TIME
DEADLINE FOR TECHNICAL QUESTIONS (There is no deadline for administrative questions)	**05-13-2015**	**11:00 AM**
BIDS DUE (ON OR BEFORE) Procurement Office, 4th Floor, Cubicle NE 112 605 Suwannee Street, MS20 Tallahassee, FL 32399-0450	**05-28-2015**	**03:00 PM**
PUBLIC OPENING 4th Floor Conference Room - 440A 605 Suwannee Street, MS20 Tallahassee, FL 32399-0450	**05-28-2015**	**03:00 PM**
POSTING OF INTENDED DECISION/AWARD	**06-16-2015**	**05:00 PM**

3) BID OPENING AGENDA

The sealed bids will be opened by the Department's Procurement Office personnel at the date, time and location in the Timeline. All bid openings are open to the public and will be conducted according to the following agenda:
Opening remarks – Approximate time of 2 minutes by Department Procurement Office personnel.
Public input period – To allow a maximum of 15 minutes total for public input related to the bid solicitation.
Bids opened – At conclusion of public input or 15 minutes, whichever occurs first, bids received timely will be opened with bidder's name and prices to be read aloud.
Adjourn - After all bids received timely have been opened, the meeting will be adjourned.

4) SPECIAL ACCOMMODATIONS

Any person with a qualified disability requiring special accommodations at a pre-bid conference, public

meeting, and/or opening shall contact the contact person at the phone number, e-mail address or fax number provided on the title page at least five (5) working days prior to the event. If you are hearing or speech impaired, please contact this office by using the Florida Relay Services which can be reached at 1 (800) 955-8771 (TDD).

5) CONTRACT USE

Use of the contract resulting from this bid will be optional for the Department. The Department reserves the right to solicit separate bids for any unusual or abnormal quantity requirements that may arise during the term of the contract.

6) ESTIMATED PURCHASES

It is anticipated that the Department will purchase approximately $325,000.00 under any contract resulting from this bid. This estimated amount is given only as a guideline for preparing your bid and should not be construed as representing an actual amount to be purchased under this contract. The Vendor(s) shall supply, at bid prices, the actual amounts ordered regardless of whether the total of such amounts is more or less than anticipated. This bid and the resulting contract will be subject to annual appropriated funding.

7) RENEWAL

Upon mutual agreement, the Department and the Contract Vendor may renew the contract for a period that may not exceed 3 years or the term of the original contract, whichever is longer. The renewal must be in writing and signed by both parties, and is subject to the same terms and conditions set forth in the initial contract and any written amendments signed by the parties. Any renewal shall specify the renewal price, as set forth in the solicitation response except that an agency may negotiate lower pricing. Renewal is contingent upon satisfactory performance evaluations and subject to the availability of funds.

SPECIAL CONDITIONS

1) MyFloridaMarketPlace

BIDDERS MUST BE ACTIVELY REGISTERED IN THE STATE OF FLORIDA'S MYFLORIDAMARKETPLACE SYSTEM BY THE TIME AND DATE OF THE BID OPENING OR THEY MAY BE CONSIDERED NON-RESPONSIVE (see Special Condition 21). All prospective bidders that are not registered should go to https://vendor.myfloridamarketplace.com/ to complete on-line registration, or call 1-866-352-3776 for assisted registration.

All payment(s) to the vendor resulting from this competitive solicitation **WILL** be subject to the 1% MFMP Transaction Fee in accordance with the attached Form PUR 1000 General Contract Condition #14.

2) Florida Department of Financial Services (DFS) W-9 INITIATIVE

The Florida Department of Financial Services (DFS) requires all vendors that do business with the state to submit an electronic Substitute Form W-9. Vendors must submit their W-9 forms electronically at https://flvendor.myfloridacfo.com to receive payments from the state. Contact the DFS Customer Service Desk at (850) 413-5519 or FLW9@myfloridacfo.com with any questions.

3) QUESTIONS & ANSWERS

In accordance with section 287.057(23), Florida Statutes, respondents to this solicitation or persons acting on their behalf may not contact, between the release of the solicitation and the end of the 72-hour period following the agency posting the notice of intended award, excluding Saturdays, Sundays, and state holidays, any employee or officer of the executive or legislative branch concerning any aspect of this solicitation, except

in writing to the procurement officer or as provided in the solicitation documents. Violation of this provision may be grounds for rejecting a response.

Any technical questions arising from this Invitation to Bid must be forwarded, in writing, to the procurement agent identified below. Questions must be received no later than the time and date reflected on the Timeline. The Department's written response to written inquiries submitted timely by bidders will be posted on the Florida Vendor Bid System at www.myflorida.com (click on "BUSINESS", click on "Doing Business with the State", under "Everything for Vendors and Customers", click on "Vendor Bid System (VBS)", click on "Search Advertisements"), under this bid number. It is the responsibility of all potential bidders to monitor this site for any changing information prior to submitting their bid.

WRITTEN TECHNICAL QUESTIONS should be submitted to:
Celeste Rosso, celeste.rosso@dot.state.fl.us , 605 Suwannee Street - MS 20, Tallahassee, Florida 32399-0450, Fax#: (850) 414-4951.

Questions regarding administrative aspects of the proposal process should be directed to the Procurement Agent in writing at the address above or by phone: (850) 414-4479.

4) ORAL INSTRUCTIONS / CHANGES TO THE INVITATION TO BID (ADDENDA)

No negotiations, decisions, or actions will be initiated or executed by a bidder as a result of any oral discussions with a State employee. Only those communications which are in writing from the Department will be considered as a duly authorized expression on behalf of the Department.

Notices of changes (Addenda) will be posted on the Florida Vendor Bid System at www.myflorida.com (click on "BUSINESS", click on "Doing Business with the State", under "Everything for Vendors and Customers", click on "Vendor Bid System (VBS)", click on "Search Advertisements") under this bid number. It is the responsibility of all potential bidders to monitor this site for any changing information prior to submitting your bid. All Addenda will be acknowledged by signature and subsequent submission of Addenda with bid when so stated in the Addenda.

5) DIVERSITY ACHIEVEMENT

The Department, in accordance with ***Title VI of the Civil Rights Act of 1964, 42 USC 2000d- 2000d-4, Title 49, Code of Federal Regulations, U.S. Department of Transportation, Subtitle A, Office of the Secretary, Part 21,*** Nondiscrimination in federally-assisted programs of the Department of Transportation issued pursuant to such Act, hereby notifies all bidders that the Department will affirmatively ensure that in any contract/agreement entered into pursuant to this advertisement, minority and disadvantaged business enterprises will be afforded the full opportunity to submit bids in response to this invitation and will not be discriminated on the basis of race, color, national origin, or sex in consideration for an award.

The Department encourages the recruitment and utilization of small, minority, women, and service-disabled veteran businesses. The Department, its vendors, suppliers, and consultants should take all necessary and reasonable steps to ensure that small, minority, women, and service-disabled veteran businesses have the opportunity to compete for and perform contract work for the Department in a nondiscriminatory environment.

6) PRICES/DELIVERY

Prices shall be firm, net, delivered prices, F.O.B. destination.

Delivery must be made within thirty (30) calendar days or less upon receipt of a purchase order by the contract vendor at their designated ordering location. If more time is needed, the bidder should state the extra time required and the reasons why, in their bid response. Acceptance will be subject to the Department's approval.

7) IN-STATE PREFERENCE FOR COMMODITY BIDS

In accordance with Section 287.084, Florida Statutes, when the lowest responsible and responsive bid is submitted by a vendor whose principal place of business is located outside the state of Florida, a 5% price preference shall be awarded to the lowest responsible and responsive vendor whose principal place of business is located in the state of Florida unless the state where the out-of-state vendor is located provides a price preference for businesses having a principal place of business in that state. In that case, the same price preference shall be awarded to the lowest responsible and responsive vendor whose principal place of business is located in the state of Florida responding to this Invitation to Bid (ITB).

All bidders should complete the attached "In-State Preference Form" and submit with their bid response. A vendor whose principal place of business is located outside the state of Florida, must accompany their bid response documents with a written opinion of an attorney licensed to practice law in that foreign state, as to the preferences granted by that state to its own business entities in the letting of public contracts.

For the 5% preference, the Department will apply 5% to the bid price(s) of the lowest out of state vendor whose state does not grant a preference if that vendor has submitted the lowest responsible and responsive bid.

8) INTENDED AWARD

As the best interest of the State may require, the right is reserved to make award(s) by individual item, group of items, all or none, or a combination thereof: on a geographical district basis and / or on a statewide basis with one or more suppliers to reject any and all bids or waive any minor irregularity or technicality in bids received. When it is determined there is competition to the lowest responsible bidder, evaluation of other bids is not required. Bidders are cautioned to make no assumptions, unless their bid has been evaluated as being responsive. All awards made as a result of this bid shall conform to applicable Florida Statute. If the Department is confronted with identical pricing or scoring from multiple vendors, the Department shall determine the order of award in accordance with section 295.187(4), Florida Statutes, and Rule 60A-1.011 Florida Administrative Code.

The Intended Award will be determined based on the BID PRICE only. "Optional Item Prices" will not be considered when selecting the intended award.

9) PRE-BID CONFERENCE:

A PRE-BID CONFERENCE WILL NOT BE HELD.

10) ALTERNATES

Alternate brands will be considered for this bid. The "Department" reserves the right to require each bidder to demonstrate to the satisfaction of the "Department" that the items/materials will perform in a completely acceptable manner. In the event the "Department" judges that the demonstrated performance is unsatisfactory, the "Department" may reject the bid. The bidder must be prepared to demonstrate the materials within fourteen (14) days after the bid opening date. Demonstration time and place is subject to agreement of the "Department" and the bidder.

Bidders submitting a bid that is based on an alternate brand of equipment must submit, with their bid, complete specifications and descriptive technical literature for the equipment proposed.

11) WARRANTY/SUBSTITUTIONS

A warranty is required on all items purchased against defective materials, workmanship, and failure to perform in accordance with required industry performance criteria, for a period of not less than ninety (90) days from the date of acceptance by the purchaser. Any deviation from this criteria must be documented in

the bid response or the above statement shall prevail. Delivery of substitute commodities requires prior written approval from the ordering location.

12) REPLACEMENT/RESTOCKING

Replacement of all materials found defective within the warranty period shall be made without cost to the purchaser, including transportation if applicable. All fees associated with restocking cancelled orders shall be the responsibility of the vendor.

13) PRODUCT REQUIREMENTS/SPECIFICATIONS

Items furnished shall be standard products of the manufacturer or their suppliers, shall be new, unused, clean, and free from any defects or features affecting appearance, serviceability, or the safety of the user in normal intended use.

Any deviation from specifications indicated herein must be clearly pointed out; otherwise, it will be considered that items offered are in strict compliance with these specifications, and successful bidder will be held responsible therefore. Deviations must be explained in detail on separate attached sheet(s).

14) ACCEPTANCE

All items listed in the specifications, delivered to the Department not meeting specifications or found to be poorly manufactured will not be accepted, but returned to the vendor, at their expense, for replacement. Replacement of all items found defective shall be made without cost to the Department, including transportation, if applicable. As it may be impossible for each facility to inspect all items upon arrival, a reasonable opportunity must be given to these facilities for inspection of the items, and returning those that are defective.

15) REVIEW OF BIDDER'S FACILITIES & QUALIFICATIONS

After the bid due date and prior to contract execution, the Department reserves the right to perform or to have performed, an on-site review of the bidder's facilities and qualifications. This review will serve to verify data and representations submitted by the bidder and may be used to determine whether the bidder has adequate facilities, equipment, qualified and experienced staff, and overall management capabilities to provide the required items. The review may also serve to verify whether the bidder has financial capabilities adequate to meet the contract requirements.

Should the Department determine that the bid package has material misrepresentations or that the size or nature of the bidder's facilities, equipment, management capabilities, or the number of experienced personnel (including technical staff) are not adequate to ensure satisfactory contract performance, the Department has the right to reject the bid.

16) PROTEST OF INVITATION TO BID SPECIFICATIONS

Any person who is adversely affected by the contents of this Invitation to Bid must file the following with the Department of Transportation, Clerk of Agency Proceedings, Office of the General Counsel, 605 Suwannee Street, Mail Station 58, Tallahassee, Florida 32399-0450:

1. A written notice of protest within seventy-two (72) hours after the posting of the solicitation, (the notice of protest may be Faxed to 850-414-5264), and
2. A formal written protest in compliance with Section 120.57(3), Florida Statutes, within ten (10) days of the date on which the written notice of protest is filed.

   Failure to file a protest within the time prescribed in section 120.57(3), Florida Statutes, or failure to post the bond or other security required by law within the time allowed for filing a bond shall constitute

a waiver of proceedings under Chapter 120, Florida Statutes.

17) UNAUTHORIZED ALIENS

The employment of unauthorized aliens by any contractor is considered a violation of Section 274 A(e) of the Immigration and Nationality Act. If the contractor knowingly employs unauthorized aliens, such violation shall be cause for unilateral cancellation of the contract.

18) SCRUTINIZED COMPANIES LISTS

Section 287.135, Florida Statutes, requires that at the time a company submits a bid or proposal for a contract for goods or services of $1 million or more, the company must certify that the company is not on either the Scrutinized Companies with Activities in Sudan List or the Scrutinized Companies with Activities in the Iran Petroleum Energy Sector List. Both lists are created pursuant to section 215.473, Florida Statutes.

Bid responses of $1 million or more must include the attached ***Scrutinized Companies Lists*** Form to certify the respondent is not on either of those lists.

19) RESERVATIONS

The Department reserves the right to accept or reject any or all bids received and reserves the right to make an award without further discussion of the bids submitted. Therefore, the bidder should make sure that the bid package submitted is complete and accurate and submitted to ensure delivery on or before the bid opening time and date specified in this solicitation. It is understood that the bid will become a part of the Department's official file, without obligation to the Department.

20) ADDITIONAL TERMS & CONDITIONS

No conditions may be applied to any aspect of the ITB by the bidder. Any conditions placed on any aspect of the bid documents by the bidder may result in the bid being rejected as a conditional bid (see "RESPONSIVENESS OF BIDS"). **DO NOT WRITE IN CHANGES ON ANY ITB SHEET.** The only recognized changes to the ITB prior to bid opening will be a written Addenda issued by the Department.

21) RESPONSIVENESS OF BIDS

Bids will not be considered if not received by the Department **on or before** the date and time specified as the due date for submission. All bids must be typed or printed in ink. A responsive bid is an offer to provide the items specified in this Invitation to Bid in accordance with all requirements of this Invitation to Bid. Bids found to be non-responsive will not be considered. Bids may be rejected if found to be irregular or not in conformance with the specifications and instructions herein contained. A bid may be found to be irregular or non-responsive by reasons that include, but are not limited to, failure to utilize or complete prescribed forms, modifying the bid specifications, submitting conditional bids or incomplete bids, submitting indefinite or ambiguous bids, or executing forms or the bid sheet with improper and/or undated signatures. Other conditions which may cause rejection of bids include, evidence of collusion among bidders, obvious lack of experience or expertise to provide the required items, and failure to perform or meet financial obligations on previous contracts.

22) REQUIRED DOCUMENTS

The bidder must use the attached Bid Sheet to submit its bid. The Bid Sheet must be signed and dated in ink by a representative who is authorized to contractually bind the bidder. All bid sheets and other documentation submitted in response to this solicitation must be executed and submitted in a sealed envelope. **Indicate the bid number, with the time and date of the bid opening, on the envelope used to return the bid.**

23) "DRUG-FREE WORK PLACE" PREFERENCE

Whenever two or more bids which are equal with respect to price, quality, and service are received, the Department shall determine the order of award in accordance with section 295.187(4), Florida Statutes, and Rule 60A-1.011 Florida Administrative Code, which includes a preference for bid responses that certify the business has implemented a drug-free workplace program in accordance with Section 287.087, F.S. The "Drug-Free Workplace Program Certification" must be completed and submitted with the bid response to be eligible for this preference.

24) COPYRIGHTED MATERIAL

Copyrighted material will be accepted as part of a bid only if accompanied by a waiver that will allow the Department to make paper and electronic copies necessary for the use of Department staff and agents. It is noted that copyrighted material is not exempt from the Public Records Law, Chapter 119, Florida Statutes. Therefore, such material will be subject to viewing by the public, but copies of the material will not be provided to the public.

25) ATTACHMENT TO ITB SUBMITTAL - CONFIDENTIAL MATERIAL

The Bidder must include any materials it asserts to be exempted from public disclosure under Chapter 119, Florida Statutes, in a separate bound document labeled "Attachment to Invitation to Bid, # ITB-DOT- 14/15-9044-RC - Confidential Material". The Bidder must identify the specific Statute that authorizes exemption from the Public Records Law. Any claim of confidentiality on materials the Bidder asserts to be exempt from public disclosure and placed elsewhere in the bid will be considered waived by the Bidder upon submission, effective after opening.

26) MAIL OR DELIVER PROPOSAL TO: (DO NOT FAX)

Florida Department of Transportation
Procurement Office - Celeste Rosso
605 Suwannee Street, MS 20,
Tallahassee, Florida 32399-0450
(or hand deliver to 4th Floor - Cubicle NE 112)

It is the bidder's responsibility to assure that the bid is delivered to the proper place **on or before** the Bid Due date and time (See Introduction Section 2, Timeline). Bids which for any reason are not so delivered will not be considered.

27) MODIFICATIONS, RESUBMITTAL AND WITHDRAWAL

Bidders may modify submitted bids at any time prior to the bid due date. Requests for modification of a submitted bid shall be in writing and must be signed by an authorized signatory of the bidder. Upon receipt and acceptance of such a request, the entire bid will be returned to the bidder and not considered unless resubmitted by the due date and time. Bidders may also send a change in a sealed envelope to be opened at the same time as the bid. The ITB number, opening date and time should appear on the envelope of the modified bid.

28) POSTING OF INTENDED DECISION/AWARD

28.1 - General:

The Department's decision will be posted on the Florida Vendor Bid System at www.myflorida.com, (click on "BUSINESS", click on "Doing Business with the State", under "Everything for Vendors and Customers", click on "Vendor Bid System (VBS)", on date and time in the Timeline, and will remain posted for a period of seventy-two (72) hours. Any bidder who is adversely affected by the Department's recommended award or

intended decision must file the following with the Department of Transportation, Clerk of Agency Proceedings, Office of the General Counsel, 605 Suwannee Street, Mail Station 58, Tallahassee, Florida 32399-0450:

1. A written notice of protest within seventy-two (72) hours after posting of the Intended Award, (the notice of protest may be Faxed to 850-414-5264), and

2. A formal written protest and protest bond in compliance with Section 120.57(3), Florida Statutes, within ten (10) days of the date on which the written notice of protest is filed. At the time of filing the formal written protest, a bond (a cashier's check or money order may be accepted) payable to the Department must also be submitted in an amount equal to one percent (1%) of the estimated contract amount based on the contract price submitted by the protestor.

Failure to file a protest within the time prescribed in Section 120.57(3), Florida Statutes, or failure to post the bond or other security required by law within the time allowed for filing a bond shall constitute a waiver of proceedings under Chapter 120, Florida Statutes.

28.2 - Inability to Post:

If the Department is unable to post as defined above, the Department will notify all bidders by electronic notification on the Florida Vendor Bid System (see special condition 28.1, above) or by mail, fax, and/or telephone. The Department will provide notification of any future posting in a timely manner.

28.3 - Request to Withdraw Bid:

Requests for withdrawal will be considered if received by the Department, in writing, within seventy-two (72) hours after the bid opening time and date. Requests received in accordance with this provision will be granted by the Department upon proof of the impossibility to perform based upon obvious error on the part of the bidder. Bidders that do not withdraw as stated above will forfeit their bid bond, if applicable.

29) RECYCLED MATERIAL

The Department encourages the use of products and materials with recycled content and post-consumer recovered materials. If the item(s) specified in the Technical Specification is available with recycled content, we request that you provide product information to help in our search for recycled products. However, this bid request is for the product as specified herein and does not require prices for recycled product. This information should be sent as part of your bid response or may be sent separately.

30) PRICE ADJUSTMENTS

Price(s) shall remain firm for the life of the contract. Price adjustments will not be allowed.

31) DELIVERY LOCATION(S)

The primary point of delivery for this contract will be Bartow, Lake City, Chipley, Ft. Lauderdale, Deland, Miami, Tampa, but bid prices will include delivery to other locations, throughout Florida.

32) CANCELLATION

All contract obligations shall prevail for at least one hundred and eighty (180) days after the effective date of the contract. For the protection of both parties, this contract may be cancelled in whole or in part after one hundred and eighty (180) days by either party giving thirty (30) days prior written notice to the other contract party. The contract may, also, be cancelled by the Department for nonperformance (default) in accordance with Rule 60A-1.006(3), F.A.C.

33) ORDERING INSTRUCTIONS

Manufacturers are encouraged to bid direct naming dealers who will accept orders and complete deliveries. Bidders must include complete ordering instructions, including FEDERAL EMPLOYER IDENTIFICATION NUMBER (FEID), for invoicing dealers, with the bid on a separate sheet.

34) ORDER QUANTITIES

No minimum order quantities will be accepted. The Department will order as needed in the quantities needed.

35) OPEN PURCHASE ORDERS

The Department may, at its discretion, establish an open (estimated quantity) purchase order with the contract vendor(s) to facilitate the purchasing of materials. The purchase of materials may be placed by; (1) written purchase order, (2) telephone orders by authorized Department personnel, or (3) an itemized order in writing. The Department will supply the contract vendor(s) with a list of personnel authorized to order. Delivery of items on these open purchase orders shall not exceed the contract effective period.

36) INVOICING

Invoices must match units specified on the Purchase Order.

37) FORMS

The Bidder must complete all required items below and submit them as part of the Bid package. Any Bid in which these forms are not used or in which these forms are improperly executed may be considered non-responsive and the bid may be subject to rejection.

- Bid Sheet
- Compliance Verification Sheets (see Exhibit 1)
- Drug-Free Workplace Program Certification (if applicable)
- In-State Preference
- Scrutinized Companies Lists (bids of $1 million or more)
- Certification of Recycled Content (if applicable)
- Ordering Instructions

38) TERMS AND CONDITIONS

All responses are subject to the terms and conditions of this solicitation, which, in case of conflict, shall have the following order of precedence listed:

- Special Conditions
- Technical Specifications
- Bid Sheet
- Purchase Order Conditions and Instructions
- Instructions to Respondents (PUR 1001)
- General Conditions (PUR 1000)
- Introduction Section

39) ATTACHED FORMS PUR 1000, GENERAL CONTRACT CONDITIONS AND PUR 1001, GENERAL INSTRUCTIONS TO RESPONDENTS

These are standard forms that the Department is required to include in all formal solicitations. The

following paragraphs do not apply to this Invitation to Bid:

Paragraph 31, Dispute Resolution - PUR 1000
Paragraph 3, Electronic Submission – PUR 1001
Paragraph 4, Terms and Conditions – PUR 1001
Paragraph 5, Questions – PUR 1001

40) <u>E-VERIFY</u>

Vendors/Contractors:

1. shall utilize the U.S. Department of Homeland Security's E-Verify system to verify the employment eligibility of all new employees hired by the Vendor/Contractor during the term of the contract; and

2. shall expressly require any subcontractors performing work or providing services pursuant to the state contract to likewise utilize the U.S. Department of Homeland Security's E-Verify system to verify the employment eligibility of all new employees hired by the subcontractor during the contract term.

P U R C H A S E O R D E R
CONDITIONS AND INSTRUCTIONS
Revised Effective July 1, 2010

1. This purchase order was issued via MyFloridaMarketPlace and is thereby subject to a Transaction Fee of 1%, unless exempted by rule. Each line item, or portion thereof, is subject to the 1 % Transaction Fee unless a specific exemption code accompanies the line item or portion thereof. For reference, a table and description all exemption codes follows these terms and conditions.

2. Pursuant to section 287.058(1), F.S., the provisions of section 287.058(1)(a)-(i), F.S. are hereby incorporated by reference, to the extent applicable. Pursuant to section 287.0582, F.S., if this purchase order binds the State or an executive agency for the purchase of services or tangible personal property for a period in excess of one (1) fiscal year, the State of Florida's performance and obligation to pay under this contract is contingent upon an annual appropriation by the Legislature. Travel expenses are not reimbursable unless specifically authorized in writing, and shall be reimbursed only in accordance with section 112.061, F.S.

3. This purchase order may be unilaterally cancelled by the customer for vendor's refusal to allow public access to all documents, papers, letters or other material, whether made or received in conjunction with this agreement which are subject to the public records act, Chapter 119, F.S.

4. Items may be tested for compliance with specifications. Items delivered not conforming to specifications may be rejected and returned at vendor's expense. Any increase in cost may be charged against the vendor.

5. Items received in excess of quantities specified may, at purchaser's option, be returned at the vendor's expense. Substitutions are not permitted. Section 215.422, F.S., provides that agencies have 5 working days to inspect and approve goods and services, unless bid specifications or the purchase order specifies otherwise.

6. In accordance with Section 287.133(2)(a) and 287.134(2)(a), F.S., an entity or affiliate who has been on the convicted vendor list or the discriminatory vendor list, respectively, may not submit a bid on a contract to provide goods or services to a public entity; may not submit a bid on a contract with a public entity for the construction or repair of a public building or public work; may not submit bids on leases of real property to a public entity; may not award or perform work as a contractor, supplier, sub-contractor, or consultant under contract with any public entity; and may not transact business with any public entity.

7. The vendor shall comply with all laws, rules, codes, ordinances, and licensing requirements that are applicable to the conduct of its business, including those of federal, State, and local agencies having jurisdiction and authority. By way of non-exhaustive example, the vendor shall comply with section 247A(e) of the Immigration and Nationalization Act, the Americans with Disabilities Act, and all prohibitions against discrimination on the basis of race, religion, sex, creed, national origin, handicap, marital status, or veteran's status. Violation of such laws shall be grounds for termination or cancellation of this purchase order.

8. Pursuant to section 216.347, F.S., the vendor may not expend any State funds for the purpose of lobbying the Legislature, the judicial branch, or a state agency. In addition, the Contractor shall not, in connection with this or any other agreement with the State, directly or indirectly (1) offer, confer, or agree to confer any pecuniary benefit on anyone as consideration for any State officer or employee's decision, opinion, recommendation, vote, other exercise of discretion, or violation of a known legal duty, or (2) offer, give, or agree to give to anyone any gratuity for the benefit of, or at the direction or request of, any State officer or employee. For purposes of clause (2), "gratuity" means any payment of more than nominal monetary value in the form of cash, travel, entertainment, gifts, meals, lodging, loans, subscriptions, advance, deposits of money, services, employment, or contracts of any kind. Upon request of the Inspector General or any other authorized State official, the vendor shall provide any type of information the Inspector General deems relevant to the vendor's integrity or responsibility. Such information may include, but shall not be limited to, the vendor's business or financial records, documents, or files of any type or form that refer to or relate to the purchase order. The vendor shall retain such records for the longer of (1) three years after the expiration of the purchase order or (2) the period required by the General Records Schedules maintained by the Florida Department of State (available at: http://dlis.dos.state.fl.us/barm/genschedules/gensched.htm). The vendor agrees to reimburse the State for the reasonable costs of investigation incurred by the Inspector General or other authorized State official for investigations of the vendor's compliance with the terms of this or any other agreement between the vendor and the State which results in the suspension or debarment of the vendor.

Such costs shall include, but shall not be limited to: salaries of investigators, including overtime; travel and lodging expenses; and expert witness and documentary fees. The vendor shall not be responsible for any costs of investigations that do not result in the vendor's suspension or debarment.

9. The purchaser assumes no liability for merchandise shipped to other than the specified destination.

10. The terms of this purchase order may not be modified. Any attempt to modify a purchase order for goods or services shall not be accepted as the basis for additional compensation.

11. Interest penalties for late payment are available subject to the provisions of section 215.422, F.S. A Vendor Ombudsman, whose duties include acting as an advocate for vendors who may be experiencing problems in obtaining timely payment(s) from a state agency may be contacted at 850-413-5516 or by calling the State Comptroller's Hotline, 1-800-848-3792.

12. The following provisions shall apply to all purchase orders UNLESS OTHERWISE INDICATED IN A SEPARATE APPLICABLE DOCUMENT agreed to by the purchaser and the vendor:

    A. All purchases are F.O.B. Destination, transportation charges prepaid.

    B. Each shipment must be shipped to the address indicated on the face of this purchase order and marked to the attention of the individual identified, if any. Each shipment must be labeled plainly with the purchase order number and must show the gross, tare, and net weight. A complete packing list must accompany each shipment. This paragraph shall also apply to any third party who ships items against this purchase order on behalf of the vendor.

    C. No extra charges shall be applied for boxing, crating, packing, or insurance.

    D. The following delivery schedule shall apply: 8:00 AM – 4:00 PM, Monday through Friday, excluding legal holidays.

    E. If delivery to the specified destination cannot be made on or before the specified date, notify the purchaser immediately using the contact information provided in the MyFloridaMarketPlace system.

13. By accepting this electronic purchase order, the vendor agrees to be bound by these conditions and instructions.

14. Unless specifically addressed in the Purchase Order or attachment thereto, intellectual property rights to preexisting property will remain with the vendor. Unless specifically addressed in the Purchase Order or attachment thereto, intellectual property rights to all property created or otherwise developed by vendor for the purchasing agency will be owned by the State of Florida through the agency at the end of the purchase order. Proceeds to any state agency derived from its sale, licensing, marketing or other authorization related to any such agency-controlled intellectual property right shall be handled in the manner specified by applicable state statute.

State of Florida
PUR 1000
General Contract Conditions

Contents

1. Definitions.
2. Purchase Orders.
3. Product Version.
4. Price Changes Applicable only to Term Contracts.
5. Additional Quantities.
6. Packaging.
7. Inspection at Contractor's Site.
8. Safety Standards.
9. Americans with Disabilities Act.
10. Literature.
11. Transportation and Delivery.
12. Installation.
13. Risk of Loss.
14. Transaction Fee.
15. Invoicing and Payment.
16. Taxes.
17. Governmental Restrictions.
18. Lobbying and Integrity.
19. Indemnification.
20. Limitation of Liability.
21. Suspension of Work.
22. Termination for Convenience.
23. Termination for Cause.
24. Force Majeure, Notice of Delay, and No Damages for Delay.
25. Changes.
26. Renewal.
27. Purchase Order Duration.
28. Advertising.
29. Assignment.
30. Antitrust Assignment
31. Dispute Resolution.
32. Employees, Subcontractors, and Agents.
33. Security and Confidentiality.
34. Contractor Employees, Subcontractors, and Other Agents.
35. Insurance Requirements.
36. Warranty of Authority.
37. Warranty of Ability to Perform.
38. Notices.
39. Leases and Installment Purchases.
40. Prison Rehabilitative Industries and Diversified Enterprises, Inc. (PRIDE).
41. Products Available from the Blind or Other Handicapped.
42. Modification of Terms.
43. Cooperative Purchasing.
44. Waiver.
45. Annual Appropriations.
46. Execution in Counterparts.
47. Severability.

1. Definitions. The definitions contained in s. 60A-1.001, F.A.C. shall apply to this agreement. The following additional terms are also defined:

(a) "Contract" means the legally enforceable agreement that results from a successful solicitation. The parties to the Contract will be the Customer and Contractor.

(b) "Customer" means the State agency or other entity identified in a contract as the party to receive commodities or contractual services pursuant to a contract or that orders commodities or contractual services via purchase order or other contractual instrument from the Contractor under the Contract. The "Customer" may also be the "Buyer" as defined in the PUR 1001 if it meets the definition of both terms.

(c) "Product" means any deliverable under the Contract, which may include commodities, services, technology or software.

(d) "Purchase order" means the form or format a Customer uses to make a purchase under the Contract (e.g., a formal written purchase order, electronic purchase order, procurement card, contract or other authorized means).

2. Purchase Orders. In contracts where commodities or services are ordered by the Customer via purchase order, Contractor shall not deliver or furnish products until a Customer transmits a purchase order. All purchase orders shall bear the Contract or solicitation number, shall be placed by the Customer directly with the Contractor, and shall be deemed to incorporate by reference the Contract and solicitation terms and conditions. Any discrepancy between the Contract terms and the terms stated on the Contractor's order form, confirmation, or acknowledgement shall be resolved in favor of terms most favorable to the Customer. A purchase order for services within the ambit of section 287.058(1) of the Florida Statutes shall be deemed to incorporate by reference the requirements of subparagraphs (a) through (f) thereof. Customers shall designate a contract manager and a contract administrator as required by subsections 287.057(15) and (16) of the Florida Statutes.

3. Product Version. Purchase orders shall be deemed to reference a manufacturer's most recently release model or version of the product at the time of the order, unless the Customer specifically requests in writing an earlier model or version and the contractor is willing to provide such model or version.

4. Price Changes Applicable only to Term Contracts. If this is a term contract for commodities or services, the following provisions apply.

(a) Quantity Discounts. Contractors are urged to offer additional discounts for one time delivery of large single orders. Customers should seek to negotiate additional price concessions on quantity purchases of any products offered under the Contract. State Customers shall document their files accordingly.

(b) Best Pricing Offer. During the Contract term, if the Customer becomes aware of better pricing offered by the Contractor for substantially the same or a smaller quantity of a product outside the Contract, but upon the same or similar terms of the Contract, then at the discretion of the Customer the price under the Contract shall be immediately reduced to the lower price.

(c) Sales Promotions. In addition to decreasing prices for the balance of the Contract term due to a change in market conditions, a Contractor may conduct sales promotions involving price reductions for a specified lesser period. A Contractor shall submit to the Contract Specialist documentation identifying the proposed (1) starting and ending dates of the promotion, (2) products involved, and (3) promotional prices compared to then-authorized prices. Promotional prices shall be available to all Customers. Upon approval, the Contractor shall provide conspicuous notice of the promotion.

(d) Trade-In. Customers may trade-in equipment when making purchases from the Contract. A trade-in shall be negotiated between the Customer and the Contractor. Customers are obligated to actively seek current fair market value when trading equipment, and to keep accurate records of the process. For State agencies,

it may be necessary to provide documentation to the Department of Financial Services and to the agency property custodian pursuant to Chapter 273, F.S.

(e) Equitable Adjustment. The Customer may, in its sole discretion, make an equitable adjustment in the Contract terms or pricing if pricing or availability of supply is affected by extreme and unforeseen volatility in the marketplace, that is, by circumstances that satisfy all the following criteria: (1) the volatility is due to causes wholly beyond the Contractor's control, (2) the volatility affects the marketplace or industry, not just the particular Contract source of supply, (3) the effect on pricing or availability of supply is substantial, and (4) the volatility so affects the Contractor that continued performance of the Contract would result in a substantial loss.

5. Additional Quantities. For a period not exceeding ninety (90) days from the date of solicitation award, the Customer reserves the right to acquire additional quantities up to the amount shown on the solicitation but not to exceed the threshold for Category Two at the prices submitted in the response to the solicitation.

6. Packaging. Tangible product shall be securely and properly packed for shipment, storage, and stocking in appropriate, clearly labeled, shipping containers and according to accepted commercial practice, without extra charge for packing materials, cases, or other types of containers. All containers and packaging shall become and remain Customer's property.

7. Inspection at Contractor's Site. The Customer reserves the right to inspect, at any reasonable time with prior notice, the equipment or product or plant or other facilities of a Contractor to assess conformity with Contract requirements and to determine whether they are adequate and suitable for proper and effective Contract performance.

8. Safety Standards. All manufactured items and fabricated assemblies subject to operation under pressure, operation by connection to an electric source, or operation involving connection to a manufactured, natural, or LP gas source shall be constructed and approved in a manner acceptable to the appropriate State inspector. Acceptability customarily requires, at a minimum, identification marking of the appropriate safety standard organization, where such approvals of listings have been established for the type of device offered and furnished, for example: the American Society of Mechanical Engineers for pressure vessels; the Underwriters Laboratories and/or National Electrical Manufacturers' Association for electrically operated assemblies; and the American Gas Association for gas-operated assemblies. In addition, all items furnished shall meet all applicable requirements of the Occupational Safety and Health Act and state and federal requirements relating to clean air and water pollution.

9. Americans with Disabilities Act. Contractors should identify any products that may be used or adapted for use by visually, hearing, or other physically impaired individuals.

10. Literature. Upon request, the Contractor shall furnish literature reasonably related to the product offered, for example, user manuals, price schedules, catalogs, descriptive brochures, etc.

11. Transportation and Delivery. Prices shall include all charges for packing, handling, freight, distribution, and inside delivery. Transportation of goods shall be FOB Destination to any point within thirty (30) days after the Customer places an Order. A Contractor, within five (5) days after receiving a purchase order, shall notify the Customer of any potential delivery delays. Evidence of inability or intentional delays shall be cause for Contract cancellation and Contractor suspension.

12. Installation. Where installation is required, Contractor shall be responsible for placing and installing the product in the required locations at no additional charge, unless otherwise designated on the Contract or purchase order. Contractor's authorized product and price list shall clearly and separately identify any additional installation charges. All materials used in the installation shall be of good quality and shall be free of defects that would diminish the appearance of the product or render it structurally or operationally unsound. Installation includes the furnishing of any equipment, rigging, and materials required to install or replace the product in the proper location. Contractor shall protect the site from damage and shall repair damages or

injury caused during installation by Contractor or its employees or agents. If any alteration, dismantling, excavation, etc., is required to achieve installation, the Contractor shall promptly restore the structure or site to its original condition. Contractor shall perform installation work so as to cause the least inconvenience and interference with Customers and with proper consideration of others on site. Upon completion of the installation, the location and surrounding area of work shall be left clean and in a neat and unobstructed condition, with everything in satisfactory repair and order.

13. Risk of Loss. Matters of inspection and acceptance are addressed in s. 215.422, F.S. Until acceptance, risk of loss or damage shall remain with the Contractor. The Contractor shall be responsible for filing, processing, and collecting all damage claims. To assist the Contractor with damage claims, the Customer shall: record any evidence of visible damage on all copies of the delivering carrier's Bill of Lading; report damages to the carrier and the Contractor; and provide the Contractor with a copy of the carrier's Bill of Lading and damage inspection report. When a Customer rejects a product, Contractor shall remove it from the premises within ten days after notification or rejection. Upon rejection notification, the risk of loss of rejected or non-conforming product shall remain with the Contractor. Rejected product not removed by the Contractor within ten days shall be deemed abandoned by the Contractor, and the Customer shall have the right to dispose of it as its own property. Contractor shall reimburse the Customer for costs and expenses incurred in storing or effecting removal or disposition of rejected product.

14. Transaction Fee. The State of Florida has instituted MyFloridaMarketPlace, a statewide eProcurement System ("System"). Pursuant to section 287.057(23), Florida Statutes (2002), all payments shall be assessed a Transaction Fee of one percent (1.0%), which the Contractor shall pay to the State, unless exempt pursuant to 60A-1.032, F.A.C.

For payments within the State accounting system (FLAIR or its successor), the Transaction Fee shall, when possible, be automatically deducted from payments to the Contractor. If automatic deduction is not possible, the Contractor shall pay the Transaction Fee pursuant to Rule 60A-1.031(2), F.A.C. By submission of these reports and corresponding payments, Contractor certifies their correctness. All such reports and payments shall be subject to audit by the State or its designee.

Contractor shall receive a credit for any Transaction Fee paid by the Contractor for the purchase of any item(s) if such item(s) are returned to the Contractor through no fault, act, or omission of the Contractor. Notwithstanding the foregoing, a Transaction Fee is non-refundable when an item is rejected or returned, or declined, due to the Contractor's failure to perform or comply with specifications or requirements of the agreement.
Failure to comply with these requirements shall constitute grounds for declaring the Contractor in default and recovering reprocurement costs from the Contractor in addition to all outstanding fees. **CONTRACTORS DELINQUENT IN PAYING TRANSACTION FEES MAY BE SUBJECT TO BEING REMOVED FROM THE DEPARTMENT OF MANAGEMENT SERVICES' VENDOR LIST AS PROVIDED IN RULE 60A-1.006, F.A.C.**

15. Invoicing and Payment. Invoices shall contain the Contract number, purchase order number if applicable, and the appropriate vendor identification number. The State may require any other information from the Contractor that the State deems necessary to verify any purchase order placed under the Contract.

At the State's option, Contractors may be required to invoice electronically pursuant to guidelines of the Department of Management Services. Current guidelines require that Contractor supply electronic invoices in lieu of paper-based invoices for those transactions processed through the system. Electronic invoices shall be submitted to the Customer through the Ariba Supplier Network (ASN) in one of the following mechanisms – EDI 810, cXML, or web-based invoice entry within the ASN.

Payment shall be made in accordance with sections 215.422 and 287.0585 of the Florida Statutes, which govern time limits for payment of invoices. Invoices that must be returned to a Contractor due to preparation errors will result in a delay in payment. Contractors may call (850) 413-7269 Monday through Friday to inquire about the status of payments by State Agencies. The Customer is responsible for all payments under the Contract. A Customer's failure to pay, or delay in payment, shall not constitute a breach of the Contract and shall not relieve the Contractor of its obligations to the Department or to other Customers.

16. Taxes. The State does not pay Federal excise or sales taxes on direct purchases of tangible personal property. The State will not pay for any personal property taxes levied on the Contractor or for any taxes levied on employees' wages. Any exceptions to this paragraph shall be explicitly noted by the Customer in the special contract conditions section of the solicitation or in the Contract or purchase order.

17. Governmental Restrictions. If the Contractor believes that any governmental restrictions have been imposed that require alteration of the material, quality, workmanship or performance of the products offered under the Contract, the Contractor shall immediately notify the Customer in writing, indicating the specific restriction. The Customer reserves the right and the complete discretion to accept any such alteration or to cancel the Contract at no further expense to the Customer.

18. Lobbying and Integrity. Customers shall ensure compliance with Section 11.062, FS and Section 216.347, FS.The Contractor shall not, in connection with this or any other agreement with the State, directly or indirectly (1) offer, confer, or agree to confer any pecuniary benefit on anyone as consideration for any State officer or employee's decision, opinion, recommendation, vote, other exercise of discretion, or violation of a known legal duty, or (2) offer, give, or agree to give to anyone any gratuity for the benefit of, or at the direction or request of, any State officer or employee. For purposes of clause (2), "gratuity" means any payment of more than nominal monetary value in the form of cash, travel, entertainment, gifts, meals, lodging, loans, subscriptions, advances, deposits of money, services, employment, or contracts of any kind. Upon request of the Customer's Inspector General, or other authorized State official, the Contractor shall provide any type of information the Inspector General deems relevant to the Contractor's integrity or responsibility. Such information may include, but shall not be limited to, the Contractor's business or financial records, documents, or files of any type or form that refer to or relate to the Contract. The Contractor shall retain such records for the longer of (1) three years after the expiration of the Contract or (2) the period required by the General Records Schedules maintained by the Florida Department of State (available at: http://dlis.dos.state.fl.us/barm/genschedules/gensched.htm). The Contractor agrees to reimburse the State for the reasonable costs of investigation incurred by the Inspector General or other authorized State official for investigations of the Contractor's compliance with the terms of this or any other agreement between the Contractor and the State which results in the suspension or debarment of the Contractor. Such costs shall include, but shall not be limited to: salaries of investigators, including overtime; travel and lodging expenses; and expert witness and documentary fees. The Contractor shall not be responsible for any costs of investigations that do not result in the Contractor's suspension or debarment.

19. Indemnification. The Contractor shall be fully liable for the actions of its agents, employees, partners, or subcontractors and shall fully indemnify, defend, and hold harmless the State and Customers, and their officers, agents, and employees, from suits, actions, damages, and costs of every name and description, including attorneys' fees, arising from or relating to personal injury and damage to real or personal tangible property alleged to be caused in whole or in part by Contractor, its agents, employees, partners, or subcontractors, provided, however, that the Contractor shall not indemnify for that portion of any loss or damages proximately caused by the negligent act or omission of the State or a Customer.

Further, the Contractor shall fully indemnify, defend, and hold harmless the State and Customers from any suits, actions, damages, and costs of every name and description, including attorneys' fees, arising from or relating to violation or infringement of a trademark, copyright, patent, trade secret or intellectual property right, provided, however, that the foregoing obligation shall not apply to a Customer's misuse or modification of Contractor's products or a Customer's operation or use of Contractor's products in a manner not contemplated by the Contract or the purchase order. If any product is the subject of an infringement suit, or in the Contractor's opinion is likely to become the subject of such a suit, the Contractor may at its sole expense procure for the Customer the right to continue using the product or to modify it to become non-infringing. If the Contractor is not reasonably able to modify or otherwise secure the Customer the right to continue using the product, the Contractor shall remove the product and refund the Customer the amounts paid in excess of a reasonable rental for past use. The customer shall not be liable for any royalties.

The Contractor's obligations under the preceding two paragraphs with respect to any legal action are contingent upon the State or Customer giving the Contractor (1) written notice of any action or threatened

action, (2) the opportunity to take over and settle or defend any such action at Contractor's sole expense, and (3) assistance in defending the action at Contractor's sole expense. The Contractor shall not be liable for any cost, expense, or compromise incurred or made by the State or Customer in any legal action without the Contractor's prior written consent, which shall not be unreasonably withheld.

20. Limitation of Liability. For all claims against the Contractor under any contract or purchase order, and regardless of the basis on which the claim is made, the Contractor's liability under a contract or purchase order for direct damages shall be limited to the greater of $100,000, the dollar amount of the contract or purchase order, or two times the charges rendered by the Contractor under the purchase order. This limitation shall not apply to claims arising under the Indemnity paragraph contain in this agreement.

Unless otherwise specifically enumerated in the Contract or in the purchase order, no party shall be liable to another for special, indirect, punitive, or consequential damages, including lost data or records (unless the contract or purchase order requires the Contractor to back-up data or records), even if the party has been advised that such damages are possible. No party shall be liable for lost profits, lost revenue, or lost institutional operating savings. The State and Customer may, in addition to other remedies available to them at law or equity and upon notice to the Contractor, retain such monies from amounts due Contractor as may be necessary to satisfy any claim for damages, penalties, costs and the like asserted by or against them. The State may set off any liability or other obligation of the Contractor or its affiliates to the State against any payments due the Contractor under any contract with the State.

21. Suspension of Work. The Customer may in its sole discretion suspend any or all activities under the Contract or purchase order, at any time, when in the best interests of the State to do so. The Customer shall provide the Contractor written notice outlining the particulars of suspension. Examples of the reason for suspension include, but are not limited to, budgetary constraints, declaration of emergency, or other such circumstances. After receiving a suspension notice, the Contractor shall comply with the notice and shall not accept any purchase orders. Within ninety days, or any longer period agreed to by the Contractor, the Customer shall either (1) issue a notice authorizing resumption of work, at which time activity shall resume, or (2) terminate the Contract or purchase order. Suspension of work shall not entitle the Contractor to any additional compensation.

22. Termination for Convenience. The Customer, by written notice to the Contractor, may terminate the Contract in whole or in part when the Customer determines in its sole discretion that it is in the State's interest to do so. The Contractor shall not furnish any product after it receives the notice of termination, except as necessary to complete the continued portion of the Contract, if any. The Contractor shall not be entitled to recover any cancellation charges or lost profits.

23. Termination for Cause. The Customer may terminate the Contract if the Contractor fails to (1) deliver the product within the time specified in the Contract or any extension, (2) maintain adequate progress, thus endangering performance of the Contract, (3) honor any term of the Contract, or (4) abide by any statutory, regulatory, or licensing requirement. Rule 60A-1.006(3), F.A.C., governs the procedure and consequences of default. The Contractor shall continue work on any work not terminated. Except for defaults of subcontractors at any tier, the Contractor shall not be liable for any excess costs if the failure to perform the Contract arises from events completely beyond the control, and without the fault or negligence, of the Contractor. If the failure to perform is caused by the default of a subcontractor at any tier, and if the cause of the default is completely beyond the control of both the Contractor and the subcontractor, and without the fault or negligence of either, the Contractor shall not be liable for any excess costs for failure to perform, unless the subcontracted products were obtainable from other sources in sufficient time for the Contractor to meet the required delivery schedule. If, after termination, it is determined that the Contractor was not in default, or that the default was excusable, the rights and obligations of the parties shall be the same as if the termination had been issued for the convenience of the Customer. The rights and remedies of the Customer in this clause are in addition to any other rights and remedies provided by law or under the Contract.

24. Force Majeure, Notice of Delay, and No Damages for Delay. The Contractor shall not be responsible for delay resulting from its failure to perform if neither the fault nor the negligence of the Contractor or its

employees or agents contributed to the delay and the delay is due directly to acts of God, wars, acts of public enemies, strikes, fires, floods, or other similar cause wholly beyond the Contractor's control, or for any of the foregoing that affect subcontractors or suppliers if no alternate source of supply is available to the Contractor. In case of any delay the Contractor believes is excusable, the Contractor shall notify the Customer in writing of the delay or potential delay and describe the cause of the delay either (1) within ten (10) days after the cause that creates or will create the delay first arose, if the Contractor could reasonably foresee that a delay could occur as a result, or (2) if delay is not reasonably foreseeable, within five (5) days after the date the Contractor first had reason to believe that a delay could result. **THE FOREGOING SHALL CONSTITUTE THE CONTRACTOR'S SOLE REMEDY OR EXCUSE WITH RESPECT TO DELAY.** Providing notice in strict accordance with this paragraph is a condition precedent to such remedy. No claim for damages, other than for an extension of time, shall be asserted against the Customer. The Contractor shall not be entitled to an increase in the Contract price or payment of any kind from the Customer for direct, indirect, consequential, impact or other costs, expenses or damages, including but not limited to costs of acceleration or inefficiency, arising because of delay, disruption, interference, or hindrance from any cause whatsoever. If performance is suspended or delayed, in whole or in part, due to any of the causes described in this paragraph, after the causes have ceased to exist the Contractor shall perform at no increased cost, unless the Customer determines, in its sole discretion, that the delay will significantly impair the value of the Contract to the State or to Customers, in which case the Customer may (1) accept allocated performance or deliveries from the Contractor, provided that the Contractor grants preferential treatment to Customers with respect to products subjected to allocation, or (2) purchase from other sources (without recourse to and by the Contractor for the related costs and expenses) to replace all or part of the products that are the subject of the delay, which purchases may be deducted from the Contract quantity, or (3) terminate the Contract in whole or in part.

25. Changes. The Customer may unilaterally require, by written order, changes altering, adding to, or deducting from the Contract specifications, provided that such changes are within the general scope of the Contract. The Customer may make an equitable adjustment in the Contract price or delivery date if the change affects the cost or time of performance. Such equitable adjustments require the written consent of the Contractor, which shall not be unreasonably withheld. If unusual quantity requirements arise, the Customer may solicit separate bids to satisfy them.

26. Renewal. Upon mutual agreement, the Customer and the Contractor may renew the Contract, in whole or in part, for a period that may not exceed 3 years or the term of the contract, whichever period is longer. Any renewal shall specify the renewal price, as set forth in the solicitation response. The renewal must be in writing and signed by both parties, and is contingent upon satisfactory performance evaluations and subject to availability of funds.

27. Purchase Order Duration. Purchase orders issued pursuant to a state term or agency contract must be received by the Contractor no later than close of business on the last day of the contract's term to be considered timely. The Contractor is obliged to fill those orders in accordance with the contract's terms and conditions. Purchase orders received by the contractor after close of business on the last day of the state term or agency contract's term shall be considered void.

Purchase orders for a one-time delivery of commodities or performance of contractual services shall be valid through the performance by the Contractor, and all terms and conditions of the state term or agency contract shall apply to the single delivery/performance, and shall survive the termination of the Contract.

Contractors are required to accept purchase orders specifying delivery schedules exceeding the contracted schedule even when such extended delivery will occur after expiration of the state term or agency contract. For example, if a state term contract calls for delivery 30 days after receipt of order (ARO), and an order specifies delivery will occur both in excess of 30 days ARO and after expiration of the state term contract, the Contractor will accept the order. However, if the Contractor expressly and in writing notifies the ordering office within ten (10) calendar days of receipt of the purchase order that Contractor will not accept the extended delivery terms beyond the expiration of the state term contract, then the purchase order will either be amended in writing by the ordering entity within ten (10) calendar days of receipt of the contractor's notice to reflect the state term contract delivery schedule, or it shall be considered withdrawn.

The duration of purchase orders for recurring deliveries of commodities or performance of services shall not exceed the expiration of the state term or agency contract by more than twelve months. However, if an extended pricing plan offered in the state term or agency contract is selected by the ordering entity, the contract terms on pricing plans and renewals shall govern the maximum duration of purchase orders reflecting such pricing plans and renewals.

Timely purchase orders shall be valid through their specified term and performance by the Contractor, and all terms and conditions of the state term or agency contract shall apply to the recurring delivery/performance as provided herein, and shall survive the termination of the Contract.

Ordering offices shall not renew a purchase order issued pursuant to a state term or agency contract if the underlying contract expires prior to the effective date of the renewal.

28. Advertising. Subject to Chapter 119, Florida Statutes, the Contractor shall not publicly disseminate any information concerning the Contract without prior written approval from the Customer, including, but not limited to mentioning the Contract in a press release or other promotional material, identifying the Customer or the State as a reference, or otherwise linking the Contractor's name and either a description of the Contract or the name of the State or the Customer in any material published, either in print or electronically, to any entity that is not a party to Contract, except potential or actual authorized distributors, dealers, resellers, or service representative.

29. Assignment. The Contractor shall not sell, assign or transfer any of its rights, duties or obligations under the Contract, or under any purchase order issued pursuant to the Contract, without the prior written consent of the Customer. In the event of any assignment, the Contractor remains secondarily liable for performance of the contract, unless the Customer expressly waives such secondary liability. The Customer may assign the Contract with prior written notice to Contractor of its intent to do so.

30. Antitrust Assignment. The Contractor and the State of Florida recognize that in actual economic practice, overcharges resulting from antitrust violations are in fact usually borne by the State of Florida. Therefore, the contractor hereby assigns to the State of Florida any and all claims for such overcharges as to goods, materials or services purchased in connection with the Contract.

31. Dispute Resolution. Any dispute concerning performance of the Contract shall be decided by the Customer's designated contract manager, who shall reduce the decision to writing and serve a copy on the Contractor. The decision shall be final and conclusive unless within twenty one (21) days from the date of receipt, the Contractor files with the Customer a petition for administrative hearing. The Customer's decision on the petition shall be final, subject to the Contractor's right to review pursuant to Chapter 120 of the Florida Statutes. Exhaustion of administrative remedies is an absolute condition precedent to the Contractor's ability to pursue any other form of dispute resolution; provided, however, that the parties may employ the alternative dispute resolution procedures outlined in Chapter 120.

Without limiting the foregoing, the exclusive venue of any legal or equitable action that arises out of or relates to the Contract shall be the appropriate state court in Leon County, Florida; in any such action, Florida law shall apply and the parties waive any right to jury trial.

32. Employees, Subcontractors, and Agents. All Contractor employees, subcontractors, or agents performing work under the Contract shall be properly trained technicians who meet or exceed any specified training qualifications. Upon request, Contractor shall furnish a copy of technical certification or other proof of qualification. All employees, subcontractors, or agents performing work under the Contract must comply with all security and administrative requirements of the Customer and shall comply with all controlling laws and regulations relevant to the services they are providing under the Contract. The State may conduct, and the Contractor shall cooperate in, a security background check or otherwise assess any employee, subcontractor, or agent furnished by the Contractor. The State may refuse access to, or require replacement of, any personnel for cause, including, but not limited to, technical or training qualifications, quality of work, change in security status, or non-compliance with a Customer's security or other requirements. Such approval shall not

relieve the Contractor of its obligation to perform all work in compliance with the Contract. The State may reject and bar from any facility for cause any of the Contractor's employees, subcontractors, or agents.

33. Security and Confidentiality. The Contractor shall comply fully with all security procedures of the United States, State of Florida and Customer in performance of the Contract. The Contractor shall not divulge to third parties any confidential information obtained by the Contractor or its agents, distributors, resellers, subcontractors, officers or employees in the course of performing Contract work, including, but not limited to, security procedures, business operations information, or commercial proprietary information in the possession of the State or Customer. The Contractor shall not be required to keep confidential information or material that is publicly available through no fault of the Contractor, material that the Contractor developed independently without relying on the State's or Customer's confidential information, or material that is otherwise obtainable under State law as a public record. To insure confidentiality, the Contractor shall take appropriate steps as to its personnel, agents, and subcontractors. The warranties of this paragraph shall survive the Contract.

34. Contractor Employees, Subcontractors, and Other Agents. The Customer and the State shall take all actions necessary to ensure that Contractor's employees, subcontractors and other agents are not employees of the State of Florida. Such actions include, but are not limited to, ensuring that Contractor's employees, subcontractors, and other agents receive benefits and necessary insurance (health, workers' compensations, and unemployment) from an employer other than the State of Florida.

35. Insurance Requirements. During the Contract term, the Contractor at its sole expense shall provide commercial insurance of such a type and with such terms and limits as may be reasonably associated with the Contract. Providing and maintaining adequate insurance coverage is a material obligation of the Contractor. Upon request, the Contractor shall provide certificate of insurance. The limits of coverage under each policy maintained by the Contractor shall not be interpreted as limiting the Contractor's liability and obligations under the Contract. All insurance policies shall be through insurers authorized or eligible to write policies in Florida.

36. Warranty of Authority. Each person signing the Contract warrants that he or she is duly authorized to do so and to bind the respective party to the Contract.

37. Warranty of Ability to Perform. The Contractor warrants that, to the best of its knowledge, there is no pending or threatened action, proceeding, or investigation, or any other legal or financial condition, that would in any way prohibit, restrain, or diminish the Contractor's ability to satisfy its Contract obligations. The Contractor warrants that neither it nor any affiliate is currently on the convicted vendor list maintained pursuant to section 287.133 of the Florida Statutes, or on any similar list maintained by any other state or the federal government. The Contractor shall immediately notify the Customer in writing if its ability to perform is compromised in any manner during the term of the Contract.

38. Notices. All notices required under the Contract shall be delivered by certified mail, return receipt requested, by reputable air courier service, or by personal delivery to the agency designee identified in the original solicitation, or as otherwise identified by the Customer. Notices to the Contractor shall be delivered to the person who signs the Contract. Either designated recipient may notify the other, in writing, if someone else is designated to receive notice.

39. Leases and Installment Purchases. Prior approval of the Chief Financial Officer (as defined in Section 17.001, F.S.) is required for State agencies to enter into or to extend any lease or installment-purchase agreement in excess of the Category Two amount established by section 287.017 of the Florida Statutes.

40. Prison Rehabilitative Industries and Diversified Enterprises, Inc. (PRIDE). Section 946.515(2), F.S. requires the following statement to be included in the solicitation: "It is expressly understood and agreed that any articles which are the subject of, or required to carry out, the Contract shall be purchased from the corporation identified under Chapter 946 of the Florida Statutes (PRIDE) in the same manner and under the same procedures set forth in section 946.515(2) and (4) of the Florida Statutes; and for purposes of the Contract the person, firm, or other business entity carrying out the provisions of the Contract shall be deemed

to be substituted for the agency insofar as dealings with such corporation are concerned." Additional information about PRIDE and the products it offers is available at http://www.pridefl.com.

41. Products Available from the Blind or Other Handicapped. Section 413.036(3), F.S. requires the following statement to be included in the solicitation: "It is expressly understood and agreed that any articles that are the subject of, or required to carry out, this contract shall be purchased from a nonprofit agency for the Blind or for the Severely Handicapped that is qualified pursuant to Chapter 413, Florida Statutes, in the same manner and under the same procedures set forth in section 413.036(1) and (2), Florida Statutes; and for purposes of this contract the person, firm, or other business entity carrying out the provisions of this contract shall be deemed to be substituted for the State agency insofar as dealings with such qualified nonprofit agency are concerned." Additional information about the designated nonprofit agency and the products it offers is available at http://www.respectofflorida.org.

42. Modification of Terms. The Contract contains all the terms and conditions agreed upon by the parties, which terms and conditions shall govern all transactions between the Customer and the Contractor. The Contract may only be modified or amended upon mutual written agreement of the Customer and the Contractor. No oral agreements or representations shall be valid or binding upon the Customer or the Contractor. No alteration or modification of the Contract terms, including substitution of product, shall be valid or binding against the Customer. The Contractor may not unilaterally modify the terms of the Contract by affixing additional terms to product upon delivery (e.g., attachment or inclusion of standard preprinted forms, product literature, “shrink wrap” terms accompanying or affixed to a product, whether written or electronic) or by incorporating such terms onto the Contractor’s order or fiscal forms or other documents forwarded by the Contractor for payment. The Customer's acceptance of product or processing of documentation on forms furnished by the Contractor for approval or payment shall not constitute acceptance of the proposed modification to terms and conditions.

43. Cooperative Purchasing. Pursuant to their own governing laws, and subject to the agreement of the Contractor, other entities may be permitted to make purchases at the terms and conditions contained herein. Non-Customer purchases are independent of the agreement between Customer and Contractor, and Customer shall not be a party to any transaction between the Contractor and any other purchaser. State agencies wishing to make purchases from this agreement are required to follow the provisions of s. 287.042(16)(a), F.S. This statute requires the Department of Management Services to determine that the requestor's use of the contract is cost-effective and in the best interest of the State.

44. Waiver. The delay or failure by the Customer to exercise or enforce any of its rights under this Contract shall not constitute or be deemed a waiver of the Customer’s right thereafter to enforce those rights, nor shall any single or partial exercise of any such right preclude any other or further exercise thereof or the exercise of any other right.

45. Annual Appropriations. The State’s performance and obligation to pay under this contract are contingent upon an annual appropriation by the Legislature.

46. Execution in Counterparts. The Contract may be executed in counterparts, each of which shall be an original and all of which shall constitute but one and the same instrument.

47. Severability. If a court deems any provision of the Contract void or unenforceable, that provision shall be enforced only to the extent that it is not in violation of law or is not otherwise unenforceable and all other provisions shall remain in full force and effect.

State of Florida
PUR 1001
General Instructions to Respondents

Contents

1. Definitions.
2. General Instructions.
3. Electronic Submission of Responses.
4. Terms and Conditions.
5. Questions.
6. Conflict of Interest.
7. Convicted Vendors.
8. Discriminatory Vendors.
9. Respondent's Representation and Authorization.
10. Manufacturer's Name and Approved Equivalents.
11. Performance Qualifications.
12. Public Opening.
13. Electronic Posting of Notice of Intended Award.
14. Firm Response.
15. Clarifications/Revisions.
16. Minor Irregularities/Right to Reject.
17. Contract Formation.
18. Contract Overlap.
19. Public Records.
20. Protests.
21. Limitation on Vendor Contact with Agency During Solicitation Period

1. Definitions. The definitions found in s. 60A-1.001, F.A.C. shall apply to this agreement. The following additional terms are also defined:

(a) "Buyer" means the entity that has released the solicitation. The "Buyer" may also be the "Customer" as defined in the PUR 1000 if that entity meets the definition of both terms.
(b) "Procurement Officer" means the Buyer's contracting personnel, as identified in the Introductory Materials.
(c) "Respondent" means the entity that submits materials to the Buyer in accordance with these Instructions.
(d) "Response" means the material submitted by the respondent in answering the solicitation.
(e) "Timeline" means the list of critical dates and actions included in the Introductory Materials.

2. General Instructions. Potential respondents to the solicitation are encouraged to carefully review all the materials contained herein and prepare responses accordingly.

3. Electronic Submission of Responses. Respondents are required to submit responses electronically. For this purpose, all references herein to signatures, signing requirements, or other required acknowledgments hereby include electronic signature by means of clicking the "Submit Response" button (or other similar symbol or process) attached to or logically associated with the response created by the respondent within MyFloridaMarketPlace. The respondent agrees that the action of electronically submitting its response constitutes:

- an electronic signature on the response, generally,
- an electronic signature on any form or section specifically calling for a signature, and
- an affirmative agreement to any statement contained in the solicitation that requires a definite confirmation or acknowledgement.

3. **Terms and Conditions.** All responses are subject to the terms of the following sections of this solicitation, which, in case of conflict, shall have the order of precedence listed:

- Technical Specifications,

- Special Conditions and Instructions,
- Instructions to Respondents (PUR 1001),
- General Conditions (PUR 1000), and
- Introductory Materials.

The Buyer objects to and shall not consider any additional terms or conditions submitted by a respondent, including any appearing in documents attached as part of a respondent's response. In submitting its response, a respondent agrees that any additional terms or conditions, whether submitted intentionally or inadvertently, shall have no force or effect. Failure to comply with terms and conditions, including those specifying information that must be submitted with a response, shall be grounds for rejecting a response.

5. Questions. Respondents shall address all questions regarding this solicitation to the Procurement Officer. Questions must be submitted via the Q&A Board within MyFloridaMarketPlace and must be RECEIVED NO LATER THAN the time and date reflected on the Timeline. Questions shall be answered in accordance with the Timeline. All questions submitted shall be published and answered in a manner that all respondents will be able to view. Respondents shall not contact any other employee of the Buyer or the State for information with respect to this solicitation. Each respondent is responsible for monitoring the MyFloridaMarketPlace site for new or changing information. The Buyer shall not be bound by any verbal information or by any written information that is not contained within the solicitation documents or formally noticed and issued by the Buyer's contracting personnel. Questions to the Procurement Officer or to any Buyer personnel shall not constitute formal protest of the specifications or of the solicitation, a process addressed in paragraph 19 of these Instructions.

6. Conflict of Interest. This solicitation is subject to chapter 112 of the Florida Statutes. Respondents shall disclose with their response the name of any officer, director, employee or other agent who is also an employee of the State. Respondents shall also disclose the name of any State employee who owns, directly or indirectly, an interest of five percent (5%) or more in the respondent or its affiliates.

7. Convicted Vendors. A person or affiliate placed on the convicted vendor list following a conviction for a public entity crime is prohibited from doing any of the following for a period of 36 months from the date of being placed on the convicted vendor list:

- submitting a bid on a contract to provide any goods or services to a public entity;
- submitting a bid on a contract with a public entity for the construction or repair of a public building or public work;
- submitting bids on leases of real property to a public entity;
- being awarded or performing work as a contractor, supplier, subcontractor, or consultant under a contract with any public entity; and
- transacting business with any public entity in excess of the Category Two threshold amount ($25,000) provided in section 287.017 of the Florida Statutes.

8. Discriminatory Vendors. An entity or affiliate placed on the discriminatory vendor list pursuant to section 287.134 of the Florida Statutes may not:

- submit a bid on a contract to provide any goods or services to a public entity;
- submit a bid on a contract with a public entity for the construction or repair of a public building or public work;
- submit bids on leases of real property to a public entity;
- be awarded or perform work as a contractor, supplier, sub-contractor, or consultant under a contract with any public entity; or
- transact business with any public entity.

9. Respondent's Representation and Authorization. In submitting a response, each respondent understands, represents, and acknowledges the following (if the respondent cannot so certify to any of following, the respondent shall submit with its response a written explanation of why it cannot do so).

- The respondent is not currently under suspension or debarment by the State or any other governmental authority.
- To the best of the knowledge of the person signing the response, the respondent, its affiliates, subsidiaries, directors, officers, and employees are not currently under investigation by any governmental authority and have not in the last ten (10) years been convicted or found liable for any act prohibited by law in any jurisdiction, involving conspiracy or collusion with respect to bidding on any public contract.
- Respondent currently has no delinquent obligations to the State, including a claim by the State for liquidated damages under any other contract.
- The submission is made in good faith and not pursuant to any agreement or discussion with, or inducement from, any firm or person to submit a complementary or other noncompetitive response.
- The prices and amounts have been arrived at independently and without consultation, communication, or agreement with any other respondent or potential respondent; neither the prices nor amounts, actual or approximate, have been disclosed to any respondent or potential respondent, and they will not be disclosed before the solicitation opening.
- The respondent has fully informed the Buyer in writing of all convictions of the firm, its affiliates (as defined in section 287.133(1)(a) of the Florida Statutes), and all directors, officers, and employees of the firm and its affiliates for violation of state or federal antitrust laws with respect to a public contract for violation of any state or federal law involving fraud, bribery, collusion, conspiracy or material misrepresentation with respect to a public contract. This includes disclosure of the names of current employees who were convicted of contract crimes while in the employ of another company.
- Neither the respondent nor any person associated with it in the capacity of owner, partner, director, officer, principal, investigator, project director, manager, auditor, or position involving the administration of federal funds:
  - Has within the preceding three years been convicted of or had a civil judgment rendered against them or is presently indicted for or otherwise criminally or civilly charged for: commission of fraud or a criminal offense in connection with obtaining, attempting to obtain, or performing a federal, state, or local government transaction or public contract; violation of federal or state antitrust statutes; or commission of embezzlement, theft, forgery, bribery, falsification or destruction of records, making false statements, or receiving stolen property; or
  - Has within a three-year period preceding this certification had one or more federal, state, or local government contracts terminated for cause or default.
- The product offered by the respondent will conform to the specifications without exception.
- The respondent has read and understands the Contract terms and conditions, and the submission is made in conformance with those terms and conditions.
- If an award is made to the respondent, the respondent agrees that it intends to be legally bound to the Contract that is formed with the State.
- The respondent has made a diligent inquiry of its employees and agents responsible for preparing, approving, or submitting the response, and has been advised by each of them that he or she has not participated in any communication, consultation, discussion, agreement, collusion, act or other conduct inconsistent with any of the statements and representations made in the response.
- The respondent shall indemnify, defend, and hold harmless the Buyer and its employees against any cost, damage, or expense which may be incurred or be caused by any error in the respondent's preparation of its bid.
- All information provided by, and representations made by, the respondent are material and important and will be relied upon by the Buyer in awarding the Contract. Any misstatement shall be treated as fraudulent concealment from the Buyer of the true facts relating to submission of the bid. A misrepresentation shall be punishable under law, including, but not limited to, Chapter 817 of the Florida Statutes.

10. Manufacturer's Name and Approved Equivalents. Unless otherwise specified, any manufacturers' names, trade names, brand names, information or catalog numbers listed in a specification are descriptive, not restrictive. With the Buyer's prior approval, the Contractor may provide any product that meets or exceeds the applicable specifications. The Contractor shall demonstrate comparability, including appropriate catalog materials, literature, specifications, test data, etc. The Buyer shall determine in its sole discretion whether a

product is acceptable as an equivalent.

11. Performance Qualifications. The Buyer reserves the right to investigate or inspect at any time whether the product, qualifications, or facilities offered by Respondent meet the Contract requirements. Respondent shall at all times during the Contract term remain responsive and responsible. In determining Respondent's responsibility as a vendor, the agency shall consider all information or evidence which is gathered or comes to the attention of the agency which demonstrates the Respondent's capability to fully satisfy the requirements of the solicitation and the contract.

Respondent must be prepared, if requested by the Buyer, to present evidence of experience, ability, and financial standing, as well as a statement as to plant, machinery, and capacity of the respondent for the production, distribution, and servicing of the product bid. If the Buyer determines that the conditions of the solicitation documents are not complied with, or that the product proposed to be furnished does not meet the specified requirements, or that the qualifications, financial standing, or facilities are not satisfactory, or that performance is untimely, the Buyer may reject the response or terminate the Contract. Respondent may be disqualified from receiving awards if respondent, or anyone in respondent's employment, has previously failed to perform satisfactorily in connection with public bidding or contracts. This paragraph shall not mean or imply that it is obligatory upon the Buyer to make an investigation either before or after award of the Contract, but should the Buyer elect to do so, respondent is not relieved from fulfilling all Contract requirements.

12. Public Opening. Responses shall be opened on the date and at the location indicated on the Timeline. Respondents may, but are not required to, attend. The Buyer may choose not to announce prices or release other materials pursuant to s. 119.071(1)(b), Florida Statutes. Any person requiring a special accommodation because of a disability should contact the Procurement Officer at least five (5) workdays prior to the solicitation opening. If you are hearing or speech impaired, please contact the Buyer by using the Florida Relay Service at (800) 955-8771 (TDD).

13. Electronic Posting of Notice of Intended Award. Based on the evaluation, on the date indicated on the Timeline the Buyer shall electronically post a notice of intended award at http://fcn.state.fl.us/owa_vbs/owa/vbs_www.main_menu. If the notice of award is delayed, in lieu of posting the notice of intended award the Buyer shall post a notice of the delay and a revised date for posting the notice of intended award. Any person who is adversely affected by the decision shall file with the Buyer a notice of protest within 72 hours after the electronic posting. The Buyer shall not provide tabulations or notices of award by telephone.

14. Firm Response. The Buyer may make an award within sixty (60) days after the date of the opening, during which period responses shall remain firm and shall not be withdrawn. If award is not made within sixty (60) days, the response shall remain firm until either the Buyer awards the Contract or the Buyer receives from the respondent written notice that the response is withdrawn. Any response that expresses a shorter duration may, in the Buyer's sole discretion, be accepted or rejected.

15. Clarifications/Revisions. Before award, the Buyer reserves the right to seek clarifications or request any information deemed necessary for proper evaluation of submissions from all respondents deemed eligible for Contract award. Failure to provide requested information may result in rejection of the response.

16. Minor Irregularities/Right to Reject. The Buyer reserves the right to accept or reject any and all bids, or separable portions thereof, and to waive any minor irregularity, technicality, or omission if the Buyer determines that doing so will serve the State's best interests. The Buyer may reject any response not submitted in the manner specified by the solicitation documents.

17. Contract Formation. The Buyer shall issue a notice of award, if any, to successful respondent(s), however, no contract shall be formed between respondent and the Buyer until the Buyer signs the Contract. The Buyer shall not be liable for any costs incurred by a respondent in preparing or producing its response or for any work performed before the Contract is effective.

18. Contract Overlap. Respondents shall identify any products covered by this solicitation that they are currently authorized to furnish under any state term contract. By entering into the Contract, a Contractor authorizes the Buyer to eliminate duplication between agreements in the manner the Buyer deems to be in its best interest.

19. Public Records. Article 1, section 24, Florida Constitution, guarantees every person access to all public records, and Section 119.011, Florida Statutes, provides a broad definition of public record. As such, all responses to a competitive solicitation are public records unless exempt by law. Any respondent claiming that its response contains information that is exempt from the public records law shall clearly segregate and mark that information and provide the specific statutory citation for such exemption.

20. Protests. Any protest concerning this solicitation shall be made in accordance with sections 120.57(3) and 287.042(2) of the Florida Statutes and chapter 28-110 of the Florida Administrative Code. Questions to the Procurement Officer shall not constitute formal notice of a protest. It is the Buyer's intent to ensure that specifications are written to obtain the best value for the State and that specifications are written to ensure competitiveness, fairness, necessity and reasonableness in the solicitation process.

Section 120.57(3)(b), F.S. and Section 28-110.003, Fla. Admin. Code require that a notice of protest of the solicitation documents shall be made within seventy-two hours after the posting of the solicitation.

Section 120.57(3)(a), F.S. requires the following statement to be included in the solicitation: "Failure to file a protest within the time prescribed in section 120.57(3), Florida Statutes, shall constitute a waiver of proceedings under Chapter 120, Florida Statutes."

Section 28-110.005, Fla. Admin. Code requires the following statement to be included in the solicitation: "Failure to file a protest within the time prescribed in Section 120.57(3), Florida Statutes, or failure to post the bond or other security required by law within the time allowed for filing a bond shall constitute a waiver of proceedings under Chapter 120, Florida Statutes."

21. Limitation on Vendor Contact with Agency During Solicitation Period. Respondents to this solicitation or persons acting on their behalf may not contact, between the release of the solicitation and the end of the 72-hour period following the agency posting the notice of intended award, excluding Saturdays, Sundays, and state holidays, any employee or officer of the executive or legislative branch concerning any aspect of this solicitation, except in writing to the procurement officer or as provided in the solicitation documents. Violation of this provision may be grounds for rejecting a response.