Drilled Shaft Resistance Based on Diameter, Torque and Crowd (Drilling Resistance vs. Rock Strength)

FDOT Contract No. BDK75-977-61

Project Manager: David Horhota, Ph.D., P.E.
UF PI's: David Bloomquist, Ph.D., P.E., Michael McVay, Ph.D.,
FDOT Geotechnical Research in Progress Report

Presented by: Michael Rodgers, E.I., Jerry Paris, E.I.
University of Florida
Department of Civil & Coastal Engineering
Presented August 16, 2012

Understanding the Problem

- More than 90% of FDOT's structures are founded on deep foundations with the use of drilled shafts increasing over the past 20 years
- No "real time" construction monitoring of the drilled shaft installation process, whereas driven piles are monitored by counting blows per foot
- This is a problem because we don't often know the extent, characteristics, or strength of the rock were drilling into that must provide adequate shaft capacity to support loading.

Spatial Variability

- Rock strength varies greatly on Florida Job sites
- 22% difference of mean rock strength between piles 8 feet apart
- Rock coring is only performed in the footprint of non-redundant shafts
- Leads to high degree of uncertainty

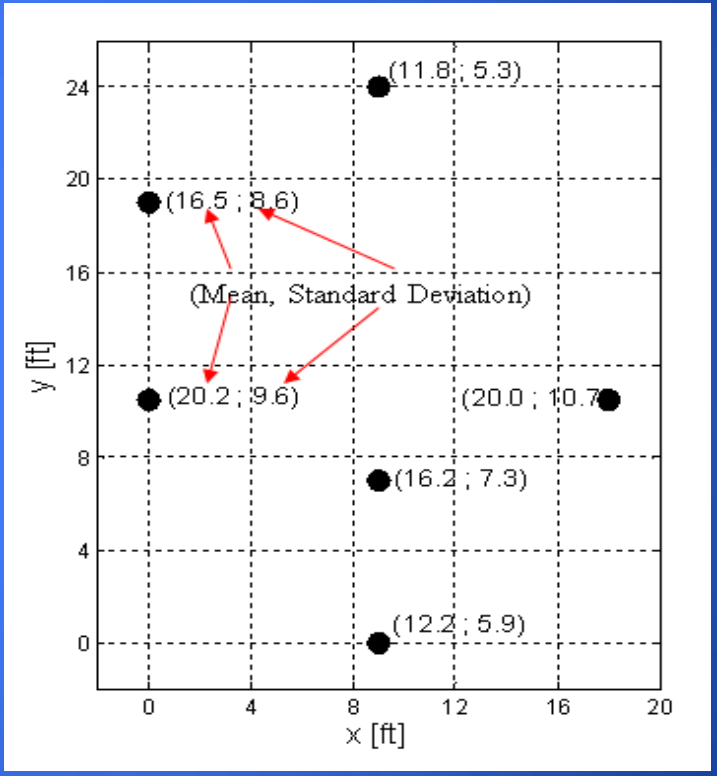

Spatial Profile of Boring Rock Strength at 17th Fort Lauderdale

5 Important "Real Time" Measurements in the Drilling Process

- Karasawa (2002), estimates rock strength using the following 5 parameters.
- "Bit Weight", crowd or downward force, F(lbf)
- Vertical penetration rate, u (ft/min)
- Torque applied to drilling bit, T (ft-lbf)
- Drilling tool diameter, d (ft)
- Rotary speed of drilling tool, N (RPM)
- Teale 1965 also uses these 5 parameters to determine the specific energy of rocks

Project Scope – Tasks 1 - 4

- Task 1 – Develop equipment to monitor drilling parameters T, F ,u and N at the rig (top of hole)
- Task 2 – Construction of coupler to monitor torque and crowd at the bit (bottom of hole)
- Task 3 – Laboratory measurements of the 5 drilling parameters on synthetic limestone
- Task 4 – Use known rock strengths and drilling parameters from task 3 to develop a relationship between normalized drilling parameters and rock strength

Project Scope – Tasks 5 - 7

- Task 5 – Compare field drilling with laboratory core strength tests
- Task 6 – Full scale drilled shaft installation with capacity estimated from drilling parameters followed by static load test
- Task 7 – Provide a final report including all results and data from laboratory and field testing

Types of Drilling Rigs

Truck Mounted

Carrier Mounted

Crawler Mounted

Crane Mounted

Brown, 2010

Drill Rig Terminology

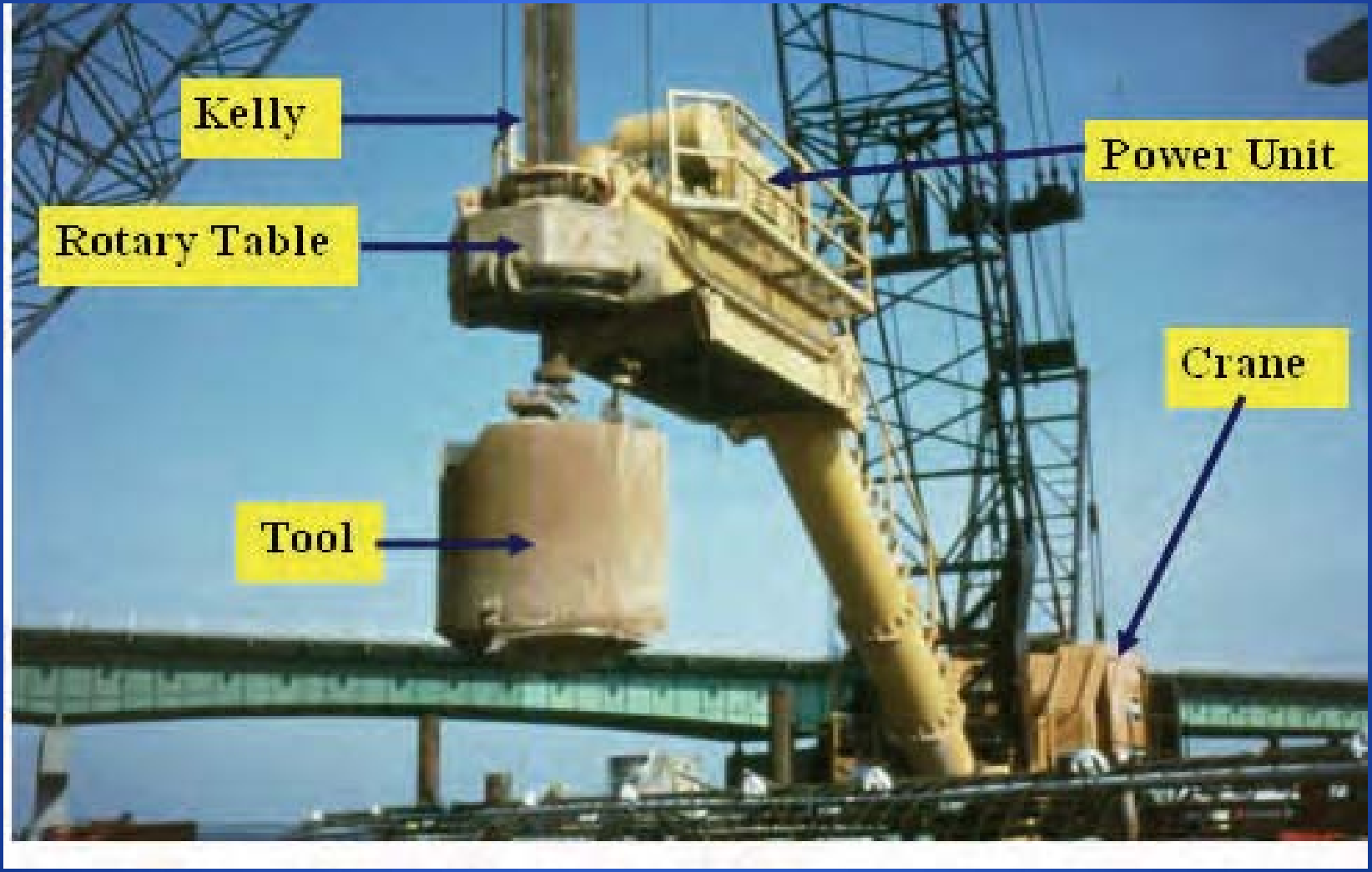

Brown, 2010

Rock Auger Bits

- Double – faced
- Double – flight
- Conical carbide rotating teeth or "bullet" teeth
- Fish – tail "stinger" or guide shaft, prevents losing vertical alignment

Rock Auger, Pengo Attachments, 2008

Typical Measurements
(From Rig Manufacturers Listed on DSIP's in Florida)

- Torque Ranges
  - 16,000 – 81,000 ft-lbf
- Bit Diameters
  - Auger Bits – 20 – 72 inch diameters
  - Buckets – 32 – 68 inch diameters
- Rotational Speed
  - 10 – 60 RPMs
- Depth
  - 30 – 90 feet

Crowd

- Spec sheet list 20 – 40 kips of crowd
- Max crowd is dependent on rig weight
- Crowd/Rig weight ratios up to 70%
- Recommended Crowd/Rig weight ratio 30 – 35%

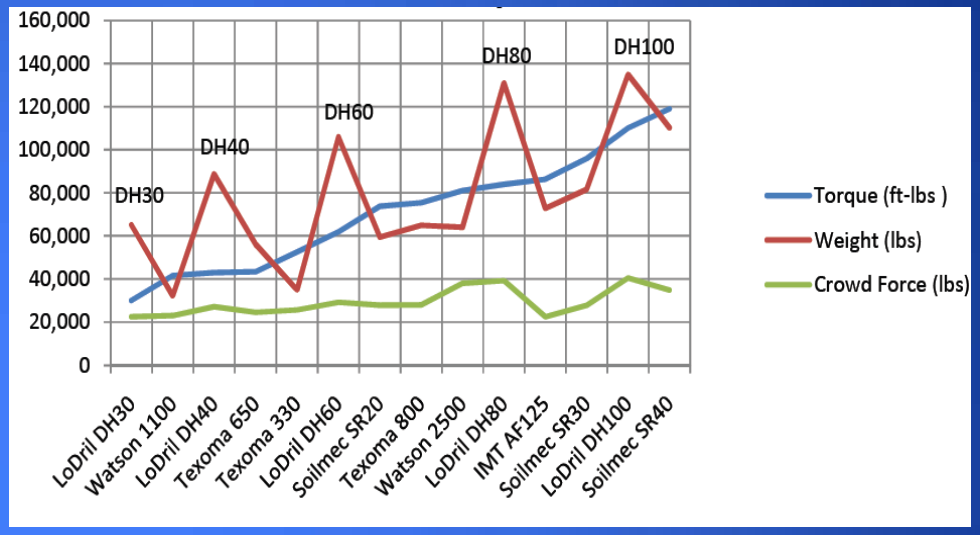

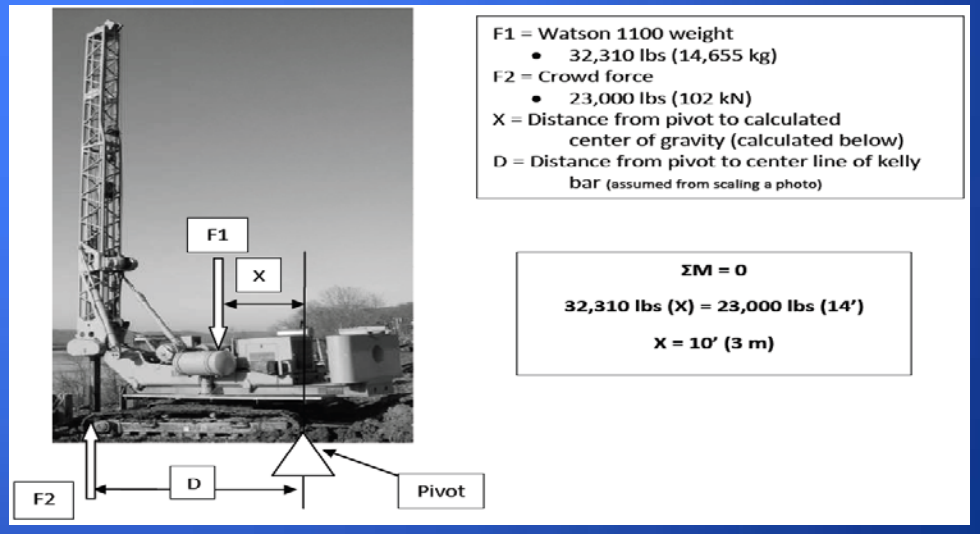

"Torque vs. Torque", Bayshore Systems, 2012

What is being used?
(Florida Contractor and DGE Survey Results)

Rig Type	Truck – Mounted	Carrier – Mounted	Crane – Mounted	Crawler – Mounted
% of rigs used	27%	9%	18%	46%
Power Unit	Hydraulic	Hydraulic	Hydraulic	Hydraulic
Kelly System	Telescoping	Telescoping	Telescoping	Telescoping
Crowd System	Hydraulic pull-down	Hydraulic pull-down	Hydraulic pull-down	Hydraulic pull-down
Crowd Monitoring	67% In-cab monitor	100% In-cab monitor	50% In-cab monitor	60% 75% In-cab monitor 25% Digital monitor
Torque Monitoring	67% In-cab monitor	100% In-cab monitor	100% 50% In-cab monitor 50% Torque multiplier	80% 50% In-cab monitor 25% Torque multiplier 25% Digital Monitor
RPM Monitoring	100% In-cab monitor	100% In-cab monitor	100% 50% In-cab monitor 50% Laser eye sensor	100% 60% In-cab monitor 20% Laser eye sensor 20% Digital monitor
Depth (ft) Monitoring	100% 100% Weighted tape 50% In-cab monitor	100% Weighted tape	100% 100% Weighted tape 50% In-cab monitor	100% 100% Weighted tape 80% In-cab monitor 20% Digital Monitor

What's Available for Monitoring?

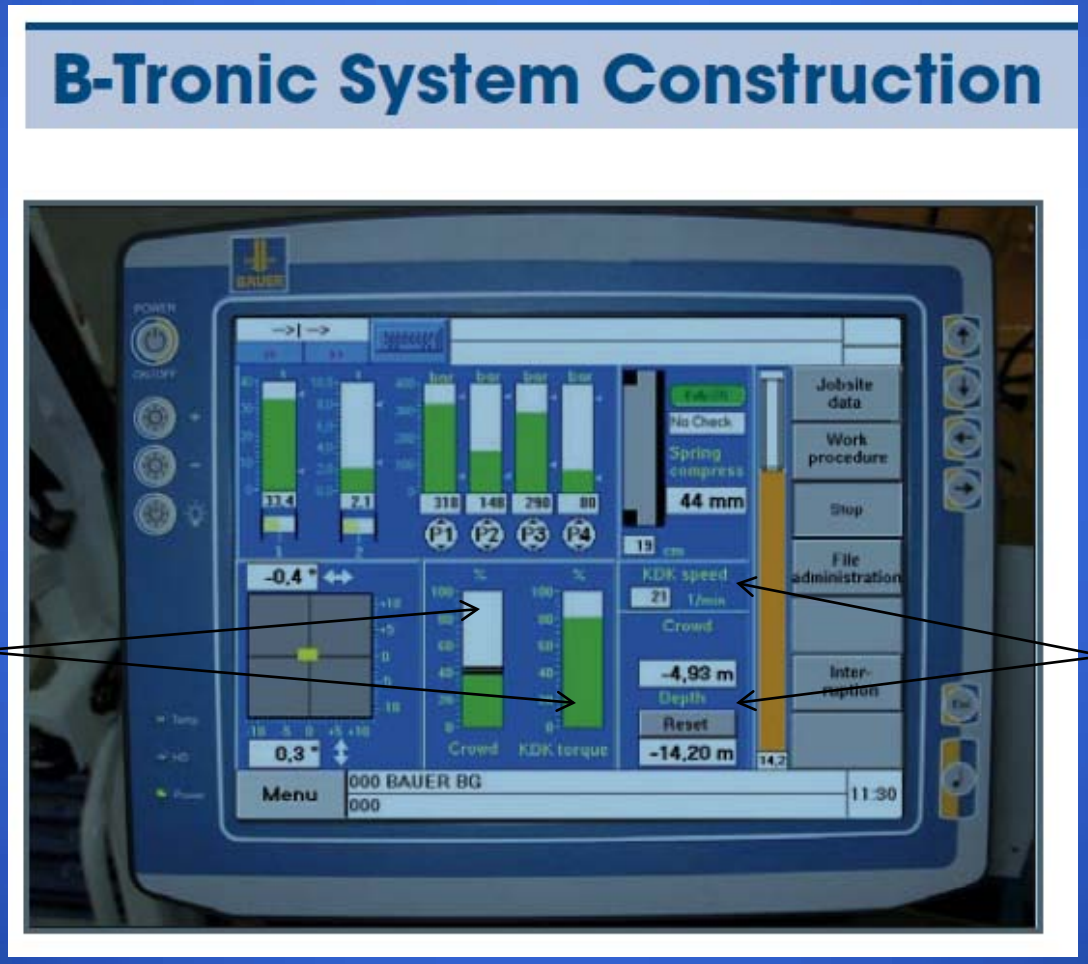

Crowd and Torque Monitoring

Depth and RPM monitoring

Bauerfoundations.com, 2012

Suggestions for Rigs Without Monitoring Capabilities

- Kelly Tractors (IMT rigs) indicated they do not supply rigs with any form of monitoring available
- Torque via Hydraulics, T
  - Tap into table hydraulics and monitor pressure
  - $P \times A \times r = T$ (FL)
    - P = hydraulic pressure (F/L^2)
    - A = cross-sectional area of hydraulic cylinder (L^2)
    - r = radius of kelly bar (L)
- Torque via Mechanical, T
  - Monitor power unit providing table rotation and elapsed monitored time
  - $P \times t = T$ (FL)
    - P = power (FL/T)
    - t = time (T)
- Crowd, F
  - Tap into crowd system hydraulics and monitor pressure
  - $P \times A = F$ (F)
    - P = hydraulic pressure (F/L^2)
    - A = cross-sectional area of hydraulic cylinder (L^2)
- RPMs, N
  - Tachometer
- Penetration Rate, u
  - Monitor movement of kelly as a measure of time

Bottom of the Hole Measurements

- Difference between top and bottom measurements
  - Compensate for friction losses
  - Difference between crowd applied at top of hole and measured crowd + weight of soil on the bit
- Measurements to be recorded at bottom
  - F – crowd or downward force applied to bit
  - T – torque applied to drill bit

How to Interpret Data

Combine top of the hole and bottom of the hole measurements to obtain full set of parameters: F, T, N, u, d

$$S'_e = \frac{8T}{d^2} \qquad I'_s = \frac{1000Fu}{Nd}$$

Specific energy, S'_e- *energy required for excavating a unit volume of rock.* Teale, 1965

I'_s = *Formation/penetration strength of rock.* Wolcott and Bordelon, 1993

Drillability Strength (D'_s) = $\frac{(S'_e)^2}{I'_s} = \frac{64\,NT^2}{1000Fud^3}$

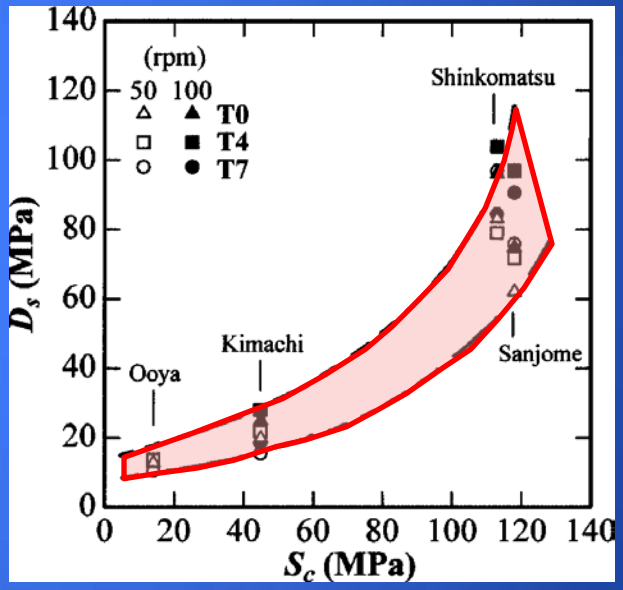

Karasawa, 2004

- Known D'_s and RPM
- Band creation
- Estimate Q_u (labeled by Karasawa as S_c)

Effect of Tooth Type

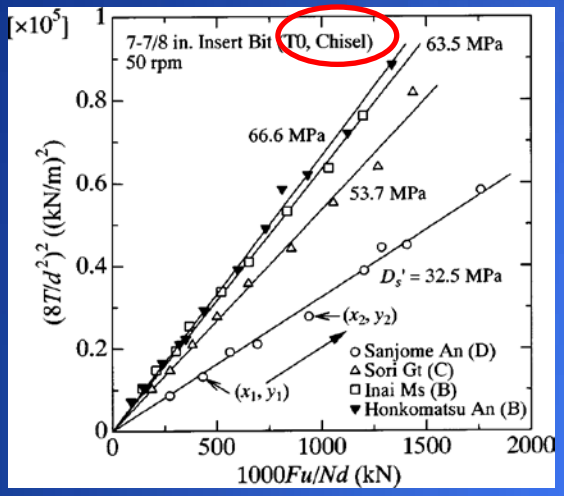

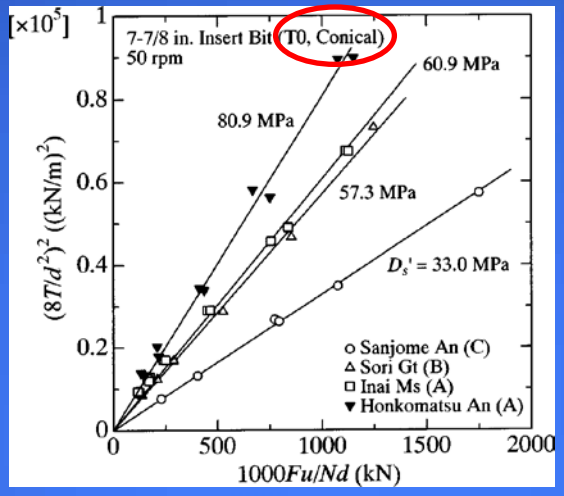

Karasawa, 2004

Rock Type	Qu Mpa (tsf)	$\Delta D'_s$
Sanjome Andesite	111 (1159)	1.5%↑
Sori Granite	207 (2161)	6.7%↑
Inai Mudstone	234 (2444)	4.1%↓
Honkomatsu Andesite	289 (3018)	21%↑

F – Crowd/downward force on bit
T – Torque on bit
u – Penetration rate of drill bit
N – Rotary speed of drill bit (RPM)
d – Diameter of drill bit

Generally negligible effect on Drillability Strength from tooth type

Drillability Strength (D'_s) = $\frac{(S'_e)^2}{I'_s} = \frac{64\,NT^2}{1000Fud^3}$

Specific energy, S'_e- *energy required for excavating a unit volume of rock.* Teale, 1965

I'_s = *Formation/penetration strength of rock.* Wolcott and Bordelon, 1993

Effect of Rotary Speed (RPM)

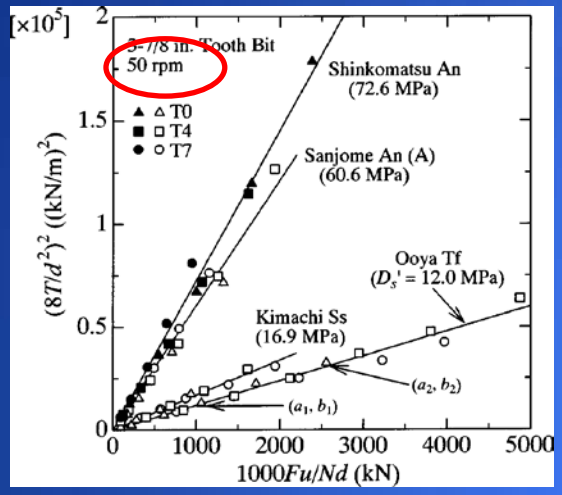

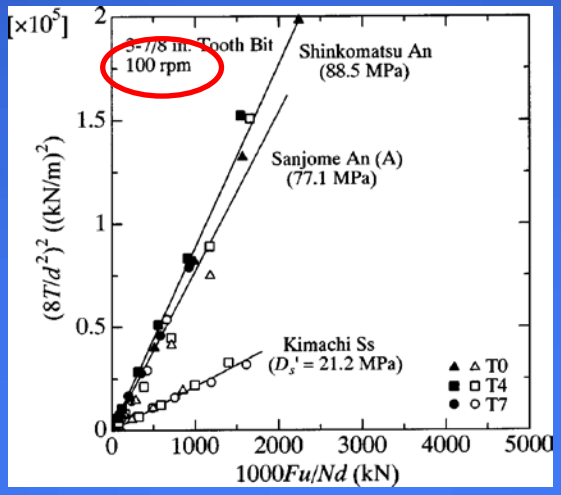

Karasawa, 2004

F – Crowd/downward force on bit
T – Torque on bit
u – Penetration rate of drill bit
N – Rotary speed of drill bit (RPM)
d – Diameter of drill bit

Rock Type	Qu Mpa (tsf)	$\Delta D'_s$
Kimachi Sandstone	111 (1159)	25%↑
Sori Granite	207 (2161)	27%↑
Shinkomatsu Andesite	113 (1180)	22%↑

Increase in Drillability Strength with increase in rotary speed.

Drillability Strength (D'_s) = $\frac{(S'_e)^2}{I'_s} = \frac{64\,NT^2}{1000Fud^3}$

Specific energy, S'_e- *energy required for excavating a unit volume of rock.* Teale, 1965

I'_s = *Formation/penetration strength of rock.* Wolcott and Bordelon, 1993

Initial Coupler Design

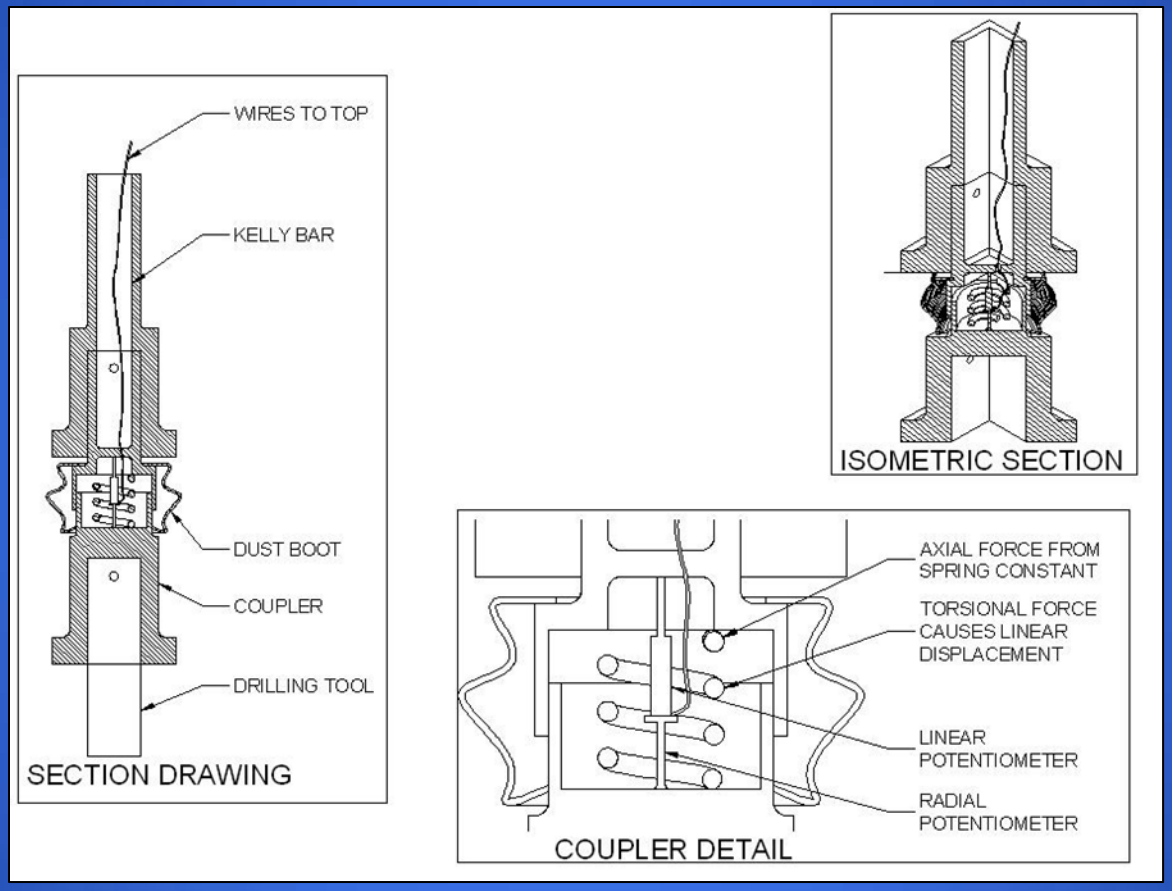

Pros:
-Robust outer shell
-Loads from Spring constants
-Data processor at ToH
-Installed in-line

Cons:
-Spring Cost/manufacture
-Stability
-Non-redundant measuring
-Wires to top add complexity.
-Needs to be waterproof.
-Delicate electronics

Final Coupler Design

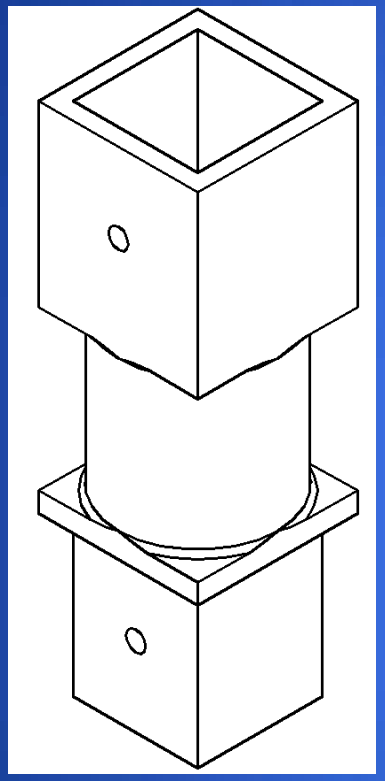

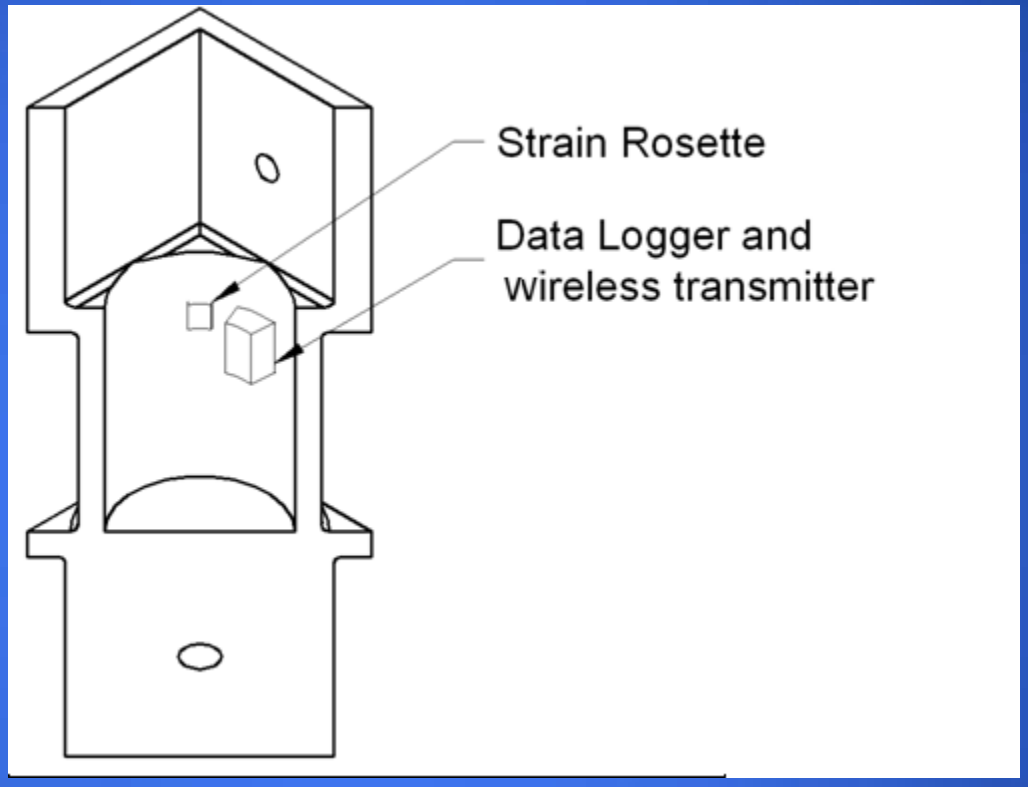

Pros:
-Robust
-No motion required for data
-Ability to have redundancy
-Very little modification
-Relatively simple electronics
-Much lower cost

Cons:
-Requires data uplink during cleaning
-Need water-proof box for data logger
-Possible Faraday Cage Effect

Small-scale Lab Test Process

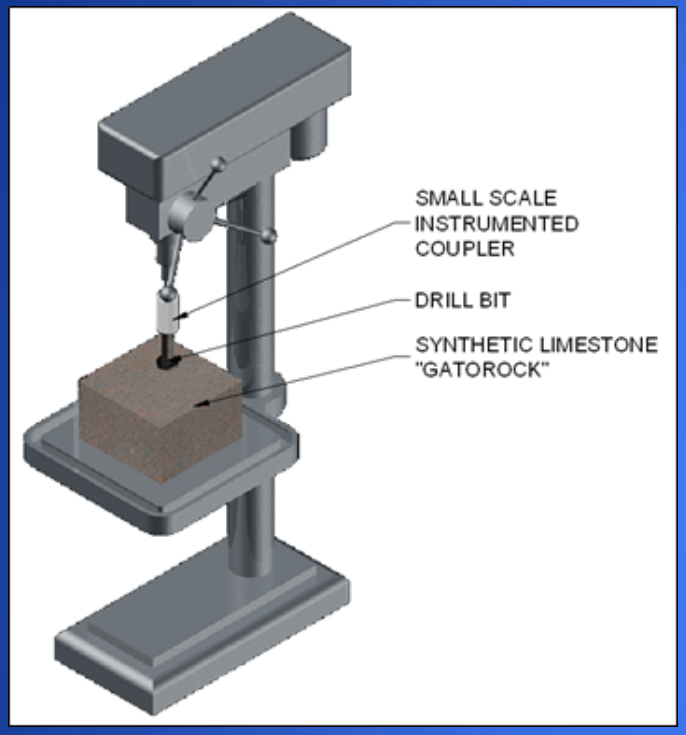

- Drill calibration

  -Apply force “f” on spindle arm

  -This causes a moment “t” on internal gears

  -This puts applied crowd “F” on sample

  -Measure different crowd (F) values from corresponding force(f) values to calibrate amount of force(f) to get desired crowd (F)

  -Measure stall torque from motor directly; torque and rpm related.

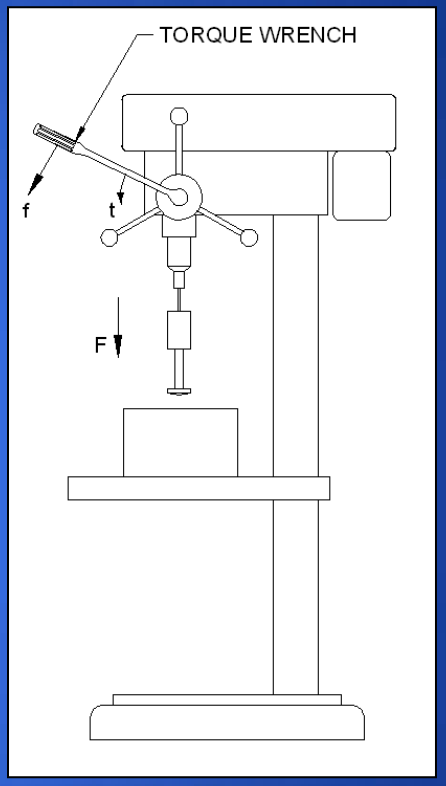

- Laboratory Procedure
  - Set rotary speed (N) on drill press and apply crowd force (F).
  - Drill into rock samples of differing strengths
  - Measure axial and torsional strain from coupler for each strength of rock.

How to Interpret Measurement Data

- Measurement data
- Strain gage orientation
- Strain transformation equations
- Crowd, F (σ x A)
- Torque, T (τJ/ρ)
- Compare measured value to known applied values to validate strain transformation equations
- Use measured values of crowd, torque, rotary speed, penetration rate and known bit diameter to create drillability strength for each compressive strength of rock
- Make D'_S vs. Qu band chart

$$\varepsilon_{nn} = \varepsilon_{xx}\cos^2\theta + \varepsilon_{yy}\sin^2\theta + \gamma_{xy}\sin\theta\cos\theta$$

$$\varepsilon_{tt} = \varepsilon_{xx}\sin^2\theta + \varepsilon_{yy}\cos^2\theta - \gamma_{xy}\sin\theta\cos\theta$$

Where

$$\varepsilon_{xx} = \frac{\sigma_{xx}}{E} \quad \varepsilon_{yy} = -\nu\varepsilon_{xx} \quad \gamma_{xy} = \frac{\tau_{xy}}{G}$$

Strain Transformation Equations, Vable (2002)

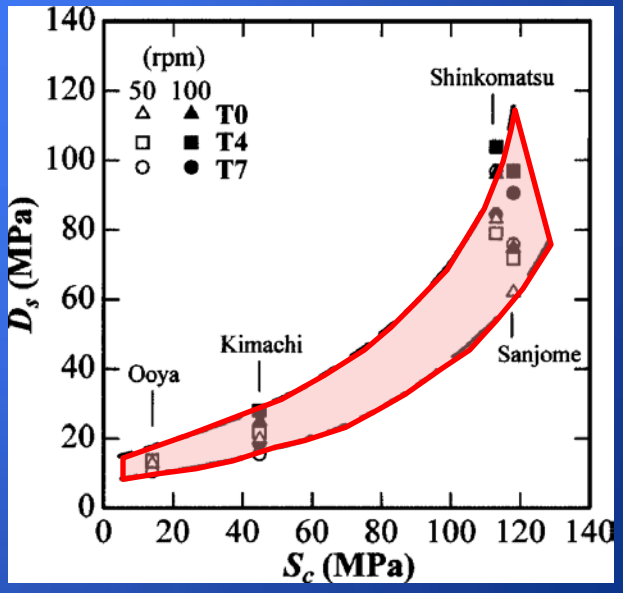

Karasawa, 2004

Synthetic Rock (Gatorock)

- Why Gatorock?
  - Homogeneous
  - Custom Strengths
  - Replicable
  - Cost

Gatorock mix designs

Compressive Rock Strength	Percent of Limestone	Percent of Water	Percent of Cement
5 tsf	80%	17.5%	2.5%
10 tsf	80%	15%	5%
20 tsf	80%	12.5%	7.5%

McVay and Niraula , 2004

Testing Samples

Rock Strength (tsf) *1	Rotary Speed RPM	Drill Diameter (in)	Crowd Force/Diameter (lb/in) *2	Measured Torque (T)	Measured Penetration Rate
5	20	3.0	175	?	?
5	20	3.0	350	?	?
5	20	4.5	175	?	?
5	20	4.5	350	?	?
5	40	3.0	175	?	?
5	40	3.0	350	?	?
5	40	4.5	175	?	?
5	40	4.5	350	?	?

*1 Tests will be performed at three different rock strengths (5 tsf, 10 tsf and 20 tsf), these tests will be repeated twice for a total of 48 tests.

*2 Crowd Force/Diameter may be adjusted when indenter stresses are evaluated

Equipment to be Used

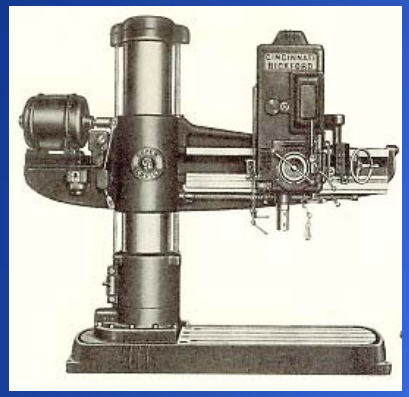

- Powermatic 1HP Drill Press
- Cincinnati Bickford 5HP Radial Arm Drill

- 4.5” double-flight auger drill head with conical carbide teeth.
- Smallest “bullet tooth” auger bit available
- Will investigate the option of modifying a 4.5” bit to a 3” bit by removing 2 teeth and machining off excess material.

- Small voltage recorder and wireless transmitter

After Lab Tests

- Make modifications to coupler if deemed necessary
- Implementation of “real-time” data collection and estimation of rock strength software (LabVIEW).
- Monitor two drilled shaft constructions, core samples will be taken, tested and compared to synthetic limestone data.
- Normalized results and drillability strength compared to actual results to assess uncertainty of correlation.
- Full scale drilled shaft installation with capacities estimated from drilling parameters followed by top down static load test.

Citations

- Karasawa et al. "Proposed Practical Methods to Estimate Rock Strength and Tooth Wear While Drilling With Roller-Cone Bits." The Journal of Energy Resources Technology, *Vol. 128 (2004):* pp. 125-132.
- Teale, R. ''The Concept of Specific Energy in Rock Drilling,'' International Journal of Rock Mechanics and Mining, *Vol. 2 (1965):* pp. 57–73.
- Vable, Madhukar. "Mechanics of Materials: Design and Failure." Michigan: MTU, (2010): p. 452.
- McVay, Michael. Niraula, Lila. "Development of P-Y Curves for Large Diameter Piles/Drilled Shafts in Limestone for FBPIER." FDOT Final Report (2004): p. 14.
- Brown et al. "Drilled Shafts: Construction Procedures and LRFD Design Methods", FHWA NHI-10-016, NHI Course No. 132014, Geotechnical Engineering Circular No. 10, May 2010
- Bayshore Systems, "Torque vs. Torque", 2012 http://www.bayshoresystems.com/upload/torque-vs-torque.pdf
- Bauer Foundations, B Tronic Brochure, 2012, http://www.bauerfoundations.com

Questions?