FLORIDA DEPARTMENT OF TRANSPORTATION
State Materials Office
5007 NE 39th Avenue
Gainesville, Florida 32609
September 8, 2010

Florida Method of Test
for
DETERMINATION OF MEAN PERMEABILITY IN THE FIELD USING THE VERTICAL INSITU PERMEAMETER (VIP)

Designation: FM 5-614

1. SCOPE

1.1 This method describes the procedure to determine the mean coefficient of permeability in the field using the Vertical Insitu Permeameter (VIP) probe.

2. APPARATUS

2.1 Vertical Insitu Permeater (VIP) Probe

2.2 SPT Drill Rig: 2 AWJ rod connections (subs)

Note 1: AWJ-probe sub & AWJ-water sub: both subs consist of a small section of AWJ rod welded to a small section of AW rod.

2.3 Water Tank

2.4 Air Compressor with Tank

2.5 Miscellaneous Equipment: tape measure, stop watch, temperature gun.

3. PROCEDURE

3.1 Advance probe to desired test depth using the SPT rig's direct-push technique.

3.1.1 Place grease between rod connections.

3.1.2 Mark AWJ rod with test intervals to track vertical movement.

Note 2: When direct-push is not viable, pre-drilling might be necessary. Stop drill minimum of 1 foot prior to final testing depth. Ensure probe is closed before advancement.

3.2 Attach AWJ-water (sub) connection to the top of the rods.

3.3 Attach hose from water tank to AWJ-water (sub) connection.

3.3.1 Ensure spring guard is in place at AWJ-water (sub) connection to prevent hose from kinking.

3.4 Attach SPT rig cable pull ring to the AWJ rod above ground surface.

3.5 Allow water to flow into the AWJ rods until water level in the water tank is stabilized. Add additional water as necessary.

3.6 Lift AWJ rod using the attached SPT cable approximately 1.625 inches to fully open the probe (use tape measure). Use mark (3.1.2) to track vertical movement.

3.7 Let water drain for 15 minutes to ensure soil is saturated. Add additional water to water tank as necessary.

3.8 Begin test. Start stopwatch when water level is at readable mark. See Table 1 for recording time and total length of test.

Note 3: Use dry erase marker to mark the water level on the tank for each reading.

3.9 When testing interval is complete, attach air hose to the top of the water tank and ensure cap is tightly secured. Ensure air pressure is at proper level (Table 1).

3.10 Flush water through probe to clean (Table 1).

3.11 While system is flushing, push down approximately 1.625 inches to close the probe (use tape measure). Previous mark (3.1.2) should now be at ground level again.

3.12 Disconnect air hose from water tank.

3.13 Disconnect water hose from AWJ-water (sub) connection.

3.13.1 Restrict flow during removal and place the connection end on top of water tank to prevent additional flow.

3.14 Remove AWJ-water (sub) connection from top of rods.

3.15 The probe is now ready to be pushed to next test depth.

4. CALCULATIONS

$$k_m = \frac{\pi d^2}{4F(t_f - t_i)} ln \frac{H_i}{H_f}$$

Where:

k_m = mean permeability (L/T)

d = piezometer (water tank) diameter (L)

F = Hvorslev (Case C) shape factor = 3D (L)

D = vertical flow port diameter (L)

t_i, t_f = initial and final time of test, respectively (T)

H_i, H_f = initial and final water head, respectively (L)

Note 4: Tests were performed in which the probe was left to drain freely into the air to estimate the limiting flow rate of the VIP. Drainage of the water tank (6 inches

diameter) from 5.5 feet to 4.5 feet above the injection port of the probe took 87 seconds. Thus, an average injection head of 5 feet (150 cm) corresponds to an injection flow rate of 64 cm^3/s. From this, and knowing F = 3D = 5.7 cm (D = 1.9 cm, injection port diameter), a maximum conductivity k_{max} = 64/(150*5.7) = 0.07 cm/s is recommended. Above this value, the hydraulic resistance of the probe and hose would be larger than the hydraulic resistance of the aquifer, affecting the accuracy of the aquifer's permeability value.

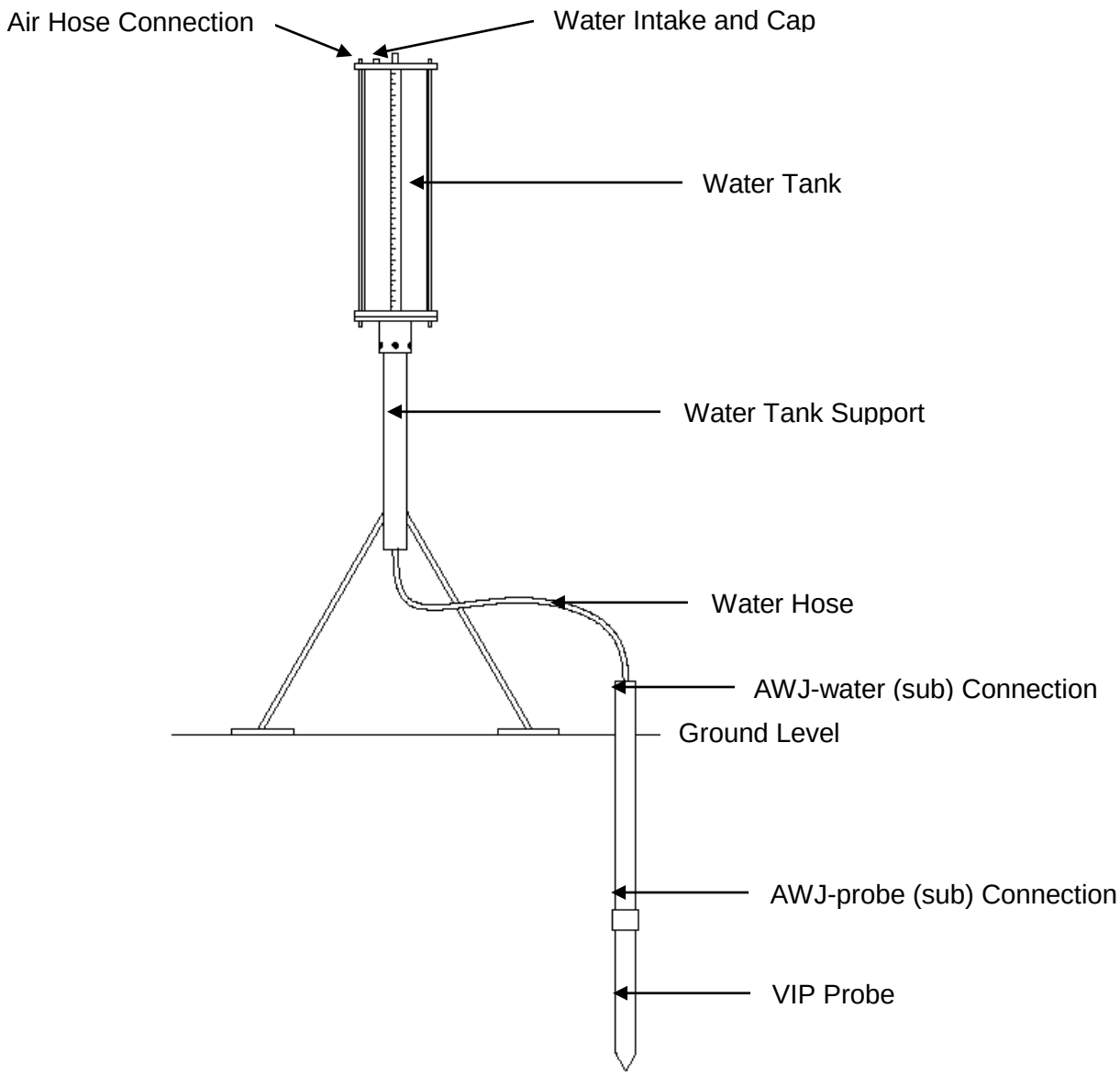

Figure 1. VIP test setup

Equipment Checklist

VIP ASSEMBLY:

Item	Inspection	In	Out
Probe	- Clean with wire brush - Threading - O-ring - Tighten set screws		
Probe Maintenance Set	- Wire brush - Allen keys - Extra set screws - Extra O-rings		
AWJ-probe (sub) Connection			
AWJ-water (sub) Connection			
Water Vessel with Cap	- Cap (top of water tank) - Nuts to secure to stand		
Support Stand			
Water Hose – Probe/Tank Connection	- Quick connections		
Portable Air Compressor with Tank	- Pressure		
Air Hose	- Quick connections		
Tape Measure			
Stopwatch			
Temperature Gun	- Measure temperature of test water		
Clipboard			
Data Sheet with Pen	- Extra copies - Thin dry eraser marker for water tank		

SPT RIG:

Item	Inspection	In	Out
AWJ Rods	- Multiple lengths		
Grease Sealant			
Water Source	- (3 gallon water tank) x (# of tests)		
Water Hose	- Connects rig water supply to water tank		
Air Compressor	- Pressure - Instead of portable		
Electrical Source (for rig without compressed air)	- 450 W		
Chalk			
Water Level Indicator and Hand Auger	- If pre-drilling is not required (no hole)		

Figure 2. Equipment Checklist

SETUP:

Task	Description
Probe	▪ Assemble probe and attach AWJ-probe (sub) connector - Ensure internal connections are tight ▪ Attach probe to SPT rig, use grease sealant between the connections
Water Supply	▪ Setup support stand and secure water tank - Place on level ground where it will not interfere with testing ▪ Hanging cap will be in center if level - Ensure water hose for probe will reach - Ensure water hose to fill tank will reach ▪ Attach water hose to base of water tank - Place end of hose on top of water tank to prevent flow ▪ Fill water tank
Air Supply	▪ If using air compressor on SPT rig ➔ adjust air pressure to proper level (Table 1) - Attach air hose and place near water tank ▪ If using portable air compressor ➔ attach to electrical source and fill air tank - Adjust air pressure to proper level (Table 1) - Attach air hose and place near water tank
Misc.	▪ Have data sheets and pen attached to clipboard - Multiple sheets - Thin dry erase marker for water tank ▪ Check stopwatch ▪ Have tape measure and chalk ready

BREAKDOWN:

Task	Description
Probe	▪ Remove AWJ-water (sub) connection ▪ Pull probe out of soil - Disconnect AWJ rods ▪ Clean probe with water and air if necessary - Check set screws and connections - Open/close probe to ensure smooth transitions
Water Supply	▪ Drain water tank away from pathways - Ensure cap is tight ▪ Disconnect water hose from base of water tank - Coil ▪ Remove water tank from support stand ▪ Breakdown support stand
Air Supply	▪ Disconnect air hose from air compressor - Coil ▪ Turn off air compressor
Misc.	▪ Make sure all data sheets/pen are together and attached to clipboard - Ensure data sheet is filled out completely ▪ Date, time, weather conditions, etc. ▪ Collect stopwatch, tape measure, and chalk ▪ Use checklist to ensure all equipment is packed for next location

Figure 3. Setup and Breakdown Tables

Supplemental Information

Table 1: Air Pressure and Testing Times Based on Soil Type*

Soil Type	Air Pressure	Recording Increment	Total Length of Test	Flush Time
Coarse Sand	10 – 20 psi	30 sec	5 min	10 sec
Fine Sand	15 – 25 psi	30 sec – 1 min	5 – 10 min	10 – 30 sec
Silty Sand	20 – 30 psi	30 sec – 1 min	5 – 10 min	10 – 30 sec
Sandy Silt	25 – 35 psi	1 – 5 min	10 – 50 min	10 – 30 sec
Clay	30 – 50 psi	5 – 10 min	50 min	30 sec – 1 min

*Numbers in this table are general approximations and will vary based on actual soil type and field conditions. Proper discretion should be used when selecting values. Initial saturation can be used to estimate appropriate values for the air pressure and time increments. Water tank is rated for 90 psi.

Figure 4. Supplemental information

Data Sheet

Site Information:

Date	
Project	
Tested By	
Weather/Notes	

Borehole Information:

Hole No.		Drill Depth (ft) – for pre-drilled hole	
Station – Offset			
Test No.		Hole Diameter (in)	
Hole Depth (ft)		Water Temperature (°C or °F) – circle	
Water Table (ft)			
Distance to Base of Water Tank (in) – measured from ground surface			

Test Information:

Reading No.	Time (sec or min) – circle	Height in Water Tank (in)
1	0	
2		
3		
4		
5		
6		
7		
8		
9		
10		
11		
12		
13		
14		
15		

Other:

Figure 5. Data Sheet Template

5. SHOP DRAWINGS

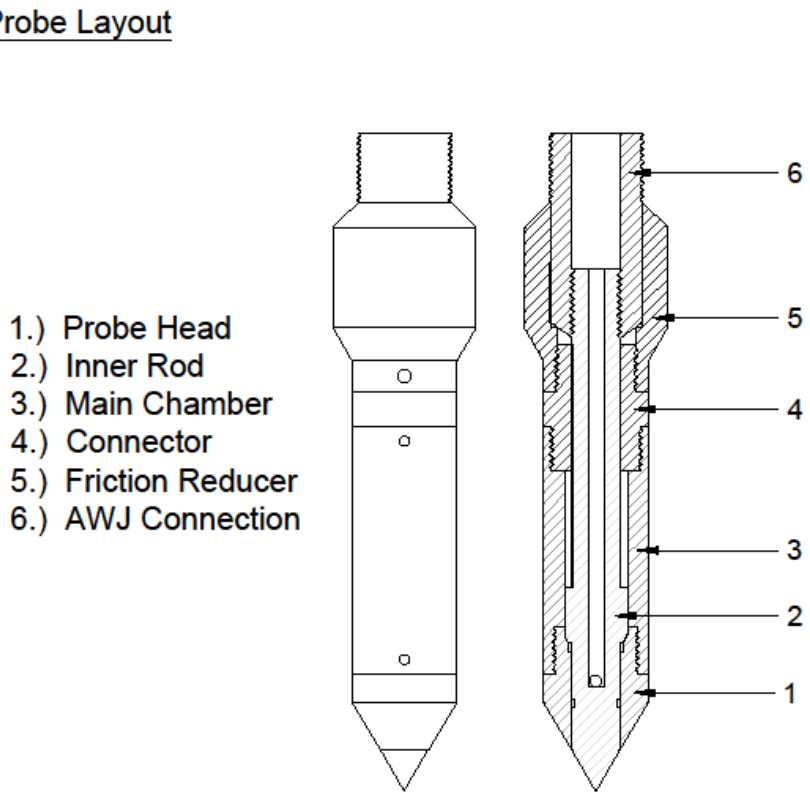

Figure 6. Probe Layout

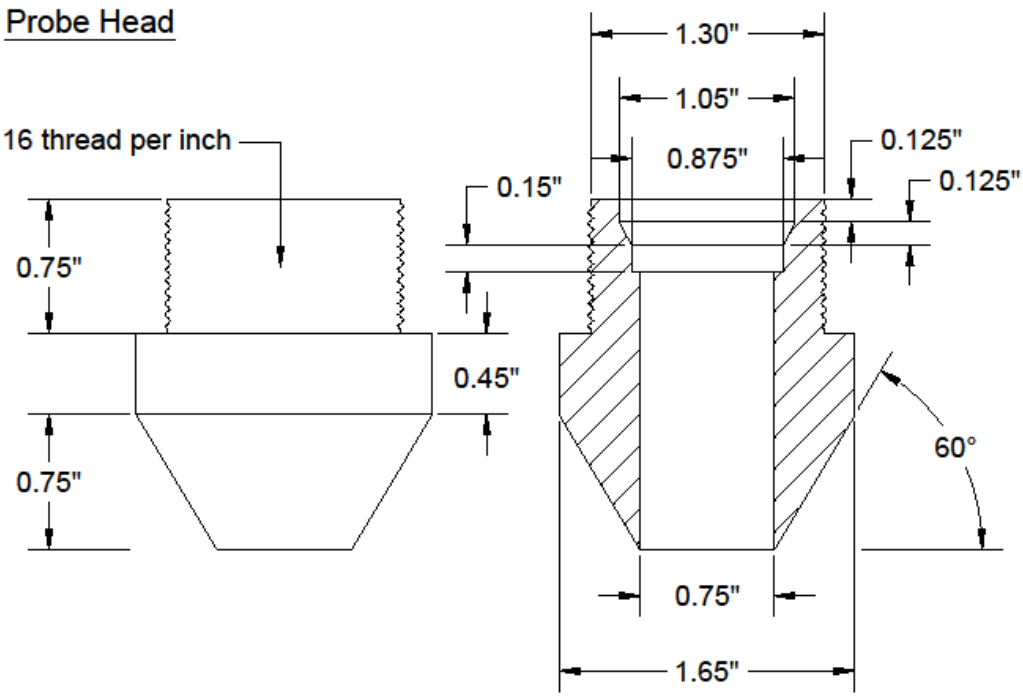

Figure 7. Probe head

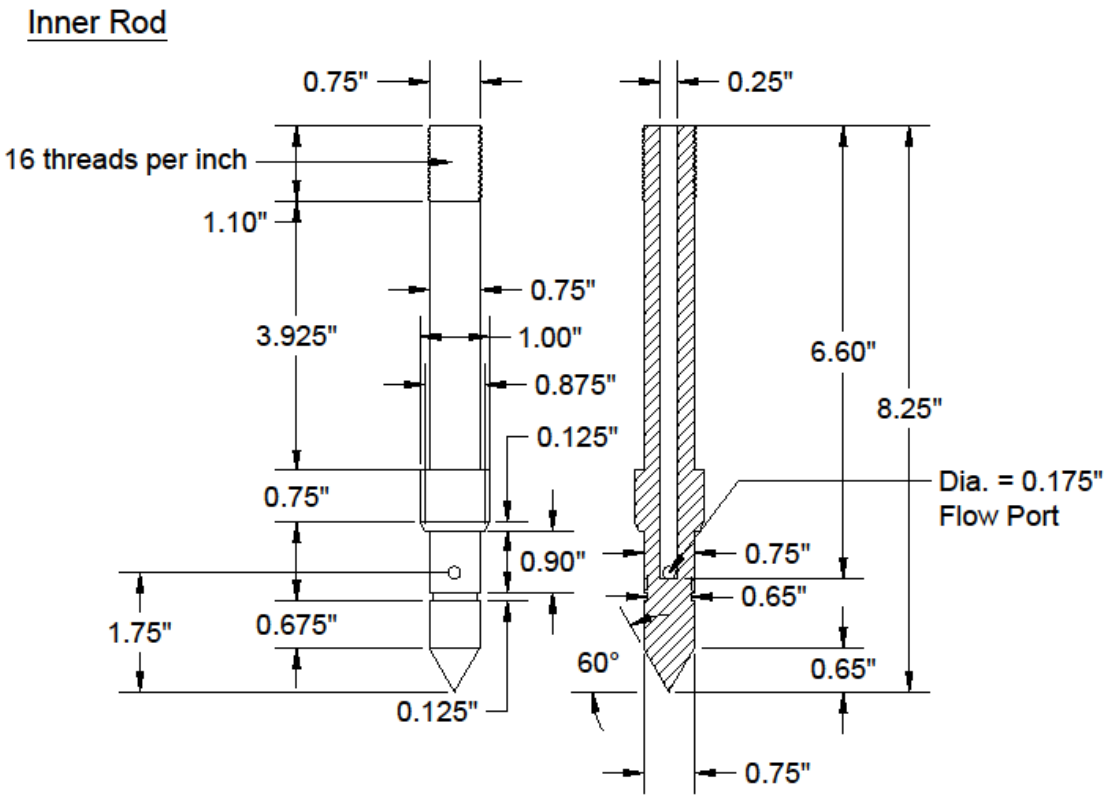

Figure 8. Inner rod

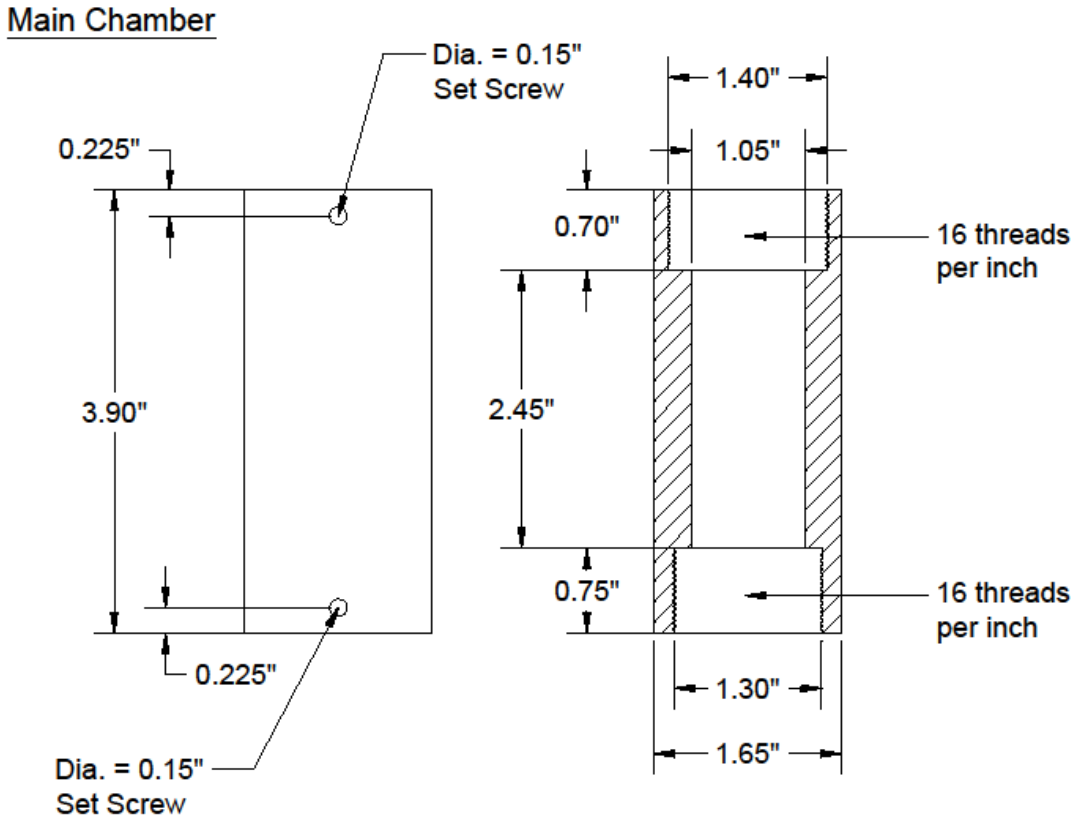

Figure 9. Main chamber

Connector

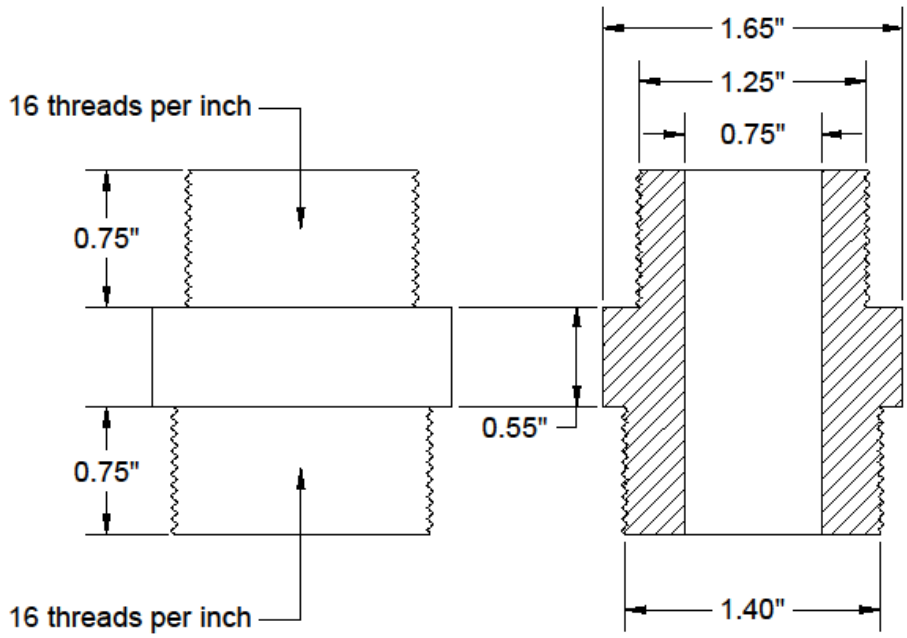

Figure 10. Connector

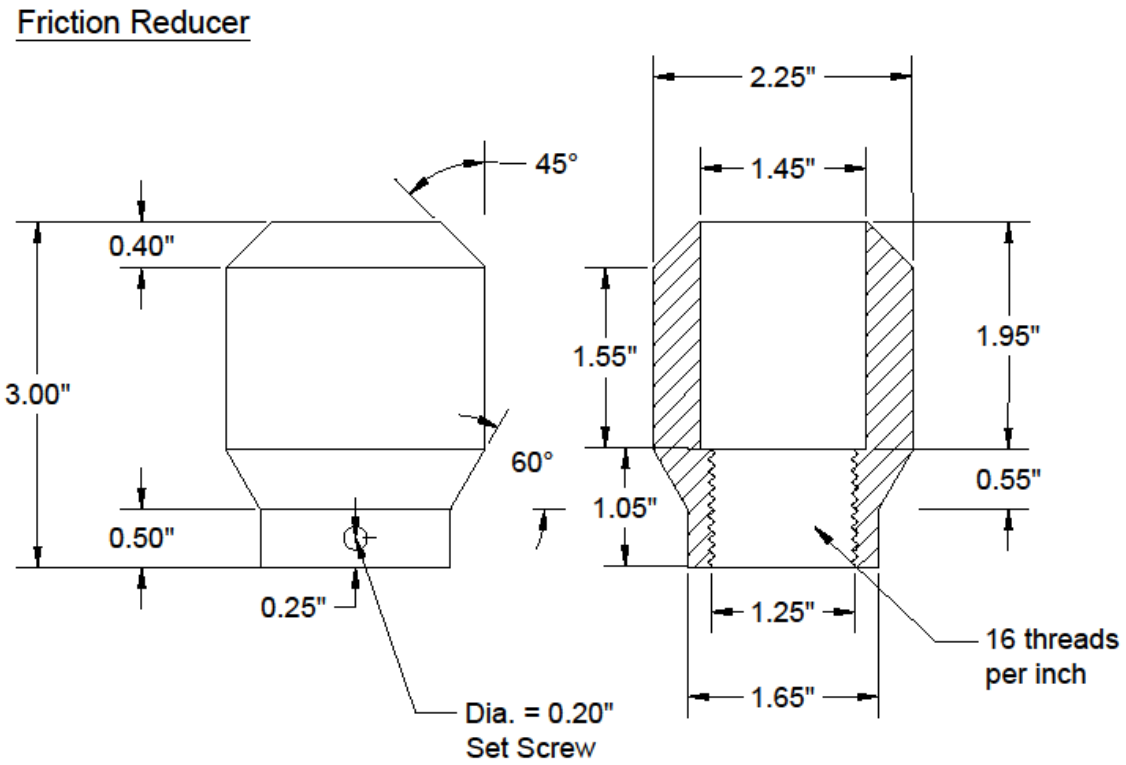

Figure 11. Friction reducer

AWJ Connection

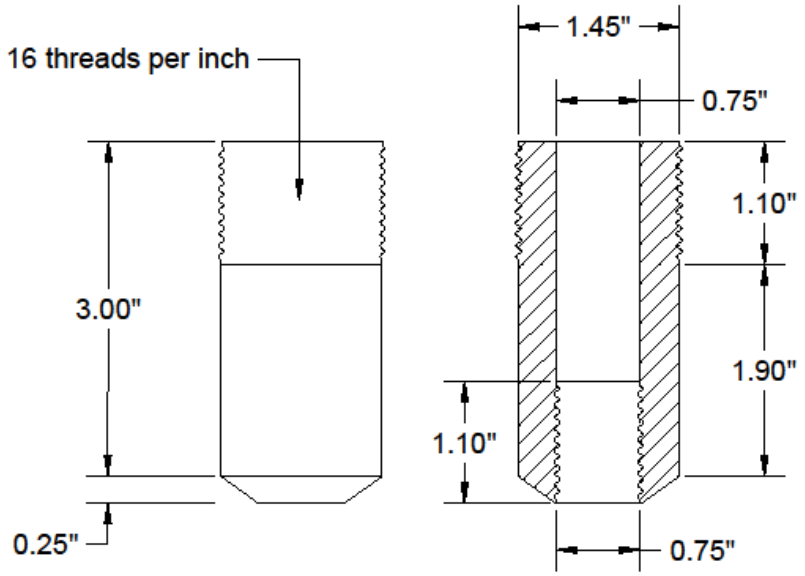

Figure 12. AWJ connection