FLORIDA DEPARTMENT OF TRANSPORTATION

BRIDGE MANAGEMENT SYSTEM

CODING GUIDE

August 11, 2015

This page is intentionally left blank.

Foreword:

This coding guide is intended to be a hard copy reference for the Department's Bridge Management System. The first part of this guide is organized by the (NBI) National Bridge Inspection Item Number as shown in the "Recording and Coding Guide for the Structure Inventory and Appraisal of the Nation's Bridges" dated December 1995. The second part of the guide deals with non-NBI items and is organized by entry screen within the Pontis application (part of the AASHTO BRIDGEWare suite). Each section relates to a system screen. Italicized portions indicate a difference from the on line help facility for that data item.

This page is intentionally left blank.

FOREWORD: *3*

PART 1 ..... **11**

NATIONAL BRIDGE INVENTORY (NBI) DATA ITEMS **11**

STATE CODE (1) (3 DIGITS) *12*
STATE CODE (1) (3 DIGITS) *13*
HIGHWAY AGENCY DISTRICT (2) *14*
COUNTY (3) *14*
PLACE CODE (4) *15*
INVENTORY ROUTE (5) *16*
FEATURES INTERSECTED (6) *23*
FACILITY CARRIED BY STRUCTURE (7) *24*
STRUCTURE NUMBER (8) *24*
LOCATION (9) *28*
INVENTORY ROUTE, MINIMUM VERTICAL CLEARANCE (10) *28*
O HYPERLINK \L "_TOC326820545" KILOMETERPOINT (11) *30*
BASE HIGHWAY NETWORK (12) *30*
LRS - INVENTORY ROUTE, SUBROUTE NUMBER (13) *30*
LATITUDE (16) *31*
LONGITUDE (17) *31*
BYPASS, DETOUR LENGTH (19) *31*
TOLL (20) *34*
MAINTENANCE RESPONSIBILITY (21) *35*
OWNER (22) *36*
FUNCTIONAL CLASSIFICATION OF INVENTORY ROUTE (26) *36*
YEAR BUILT (27) *37*
LANES ON AND UNDER THE STRUCTURE (28) *37*
AVERAGE DAILY TRAFFIC (29) *37*
YEAR OF AVERAGE DAILY TRAFFIC (30) *38*
DESIGN LOAD (31) *38*
APPROACH ROADWAY WIDTH (32) *40*
BRIDGE MEDIAN (33) *42*
SKEW (34) *44*
STRUCTURE FLARED (35) *46*
TRAFFIC SAFETY FEATURES (36) *46*
HISTORICAL SIGNIFICANCE (37) *49*
NAVIGATION CONTROL (38) *49*
NAVIGATIONAL VERTICAL CLEARANCE (39) *50*
NAVIGATIONAL HORIZONTAL CLEARANCE (40) *51*
OPEN/POSTED/CLOSED (41) *52*
TYPE SERVICE (42) *53*
STRUCTURE TYPE, MAIN (43) *55*
STRUCTURE TYPE, APPROACH SPANS (44) *58*
NUMBER OF SPANS IN MAIN UNIT (45) *61*
NUMBER OF APPROACH SPANS (46) *61*
INVENTORY ROUTE, TOTAL HORIZONTAL CLEARANCE (47) *62*
LENGTH OF MAXIMUM SPAN (48) *64*
STRUCTURE LENGTH (49) *66*
CURB OR SIDEWALK WIDTHS (50) *68*
BRIDGE ROADWAY WIDTH, CURB-TO-CURB (51) *71*
DECK WIDTH, OUT-TO-OUT (52) *74*
MINIMUM VERTICAL CLEARANCE OVER BRIDGE ROADWAY (53) *77*

MINIMUM VERTICAL UNDERCLEARANCE (54) *78*
MINIMUM LATERAL UNDER CLEARANCE ON RIGHT (55) *80*
MINIMUM LATERAL UNDER CLEARANCE ON LEFT (56) *83*
DECK (58) *86*
SUPERSTUCTURE (59) *90*
SUBSTRUCTURE (60) *96*
CHANNEL (61) *99*
CULVERT (62) *101*
OPERATING TYPE (63) *103*
OPERATING RATING (64) *103*
INVENTORY TYPE (65) *104*
INVENTORY RATING (66) *104*
STRUCTURAL EVALUATION (67) *105*
DECK GEOMETRY (68) *105*
UNDERCLEARANCES (69) *105*
POSTING (70) *106*
WATERWAY ADEQUACY (71) *107*
APPROACH ALIGNMENT (72) *109*
TYPE OF WORK (75) *110*
LENGTH OF STRUCTURE IMPROVEMENT (76) *112*
INSPECTION DATE (90) *115*
DESIGNATED INSPECTION FREQUENCY (91) *115*
CRITICAL FEATURE INSPECTION (92) *116*
CRITICAL FEATURE INSPECTION DATE (93) *117*
BRIDGE IMPROVEMENT COSTS (94) *118*
ROADWAY IMPROVEMENT COST (95) *119*
TOTAL PROJECT COST (96) *119*
YEAR OF IMPROVEMENT COST ESTIMATE (97) *120*
BORDER BRIDGE (98) *120*
BORDER BRIDGE STRUCTURE NUMBER (99) *121*
DEFENSE HIGHWAY DESIGNATION (100) *122*
PARALLEL STRUCTURE DESIGNATION (101) *122*
DIRECTION OF TRAFFIC (102) *123*
TEMPORARY STRUCTURE DESIGNATION (103) *124*
HIGHWAY SYSTEM OF THE INVENTORY ROUTE (104) *125*
FEDERAL LANDS HIGHWAY (105) *125*
YEAR RECONSTRUCTED (106) *126*
DECK STRUCTURE TYPE (107) *126*
WEARING SURFACE/PROTECTIVE SYSTEM (108) *127*
AVERAGE DAILY TRUCK TRAFFIC (109) *129*
DESIGNATED NATIONAL NETWORK (110) *129*
PIER OR ABUTMENT PROTECTION (FOR NAVIGATION) (111) *130*
NBIS BRIDGE LENGTH (112) *130*
SCOUR CRITICAL (113) *133*
FUTURE AVERAGE DAILY TRAFFIC (114) *136*
YEAR OF FUTURE AVERAGE DAILY TRAFFIC (115) *136*
MINIMUM VERTICAL LIFT CLEARANCE (116) *137*

PART 2 ..... **139**

NON NATIONAL BRIDGE INVENTORY (NBI) DATA ITEMS **139**

THIS PAGE IS INTENTIONALLY LEFT BLANK. **140**

APPRAISAL TAB - OTHER RATINGS (SCREEN 1 OF 2) 141

NBI APPRAISAL RATINGS - CALCULATED 141

SUFFICIENCY RATING PREFIX AND SUFFICIENCY RATING 141
SD/FO STATUS 141
HEALTH INDEX 141

APPRAISAL TAB – LOAD RATINGS (SCREEN 2 OF 2) 142

NBI LOAD RATINGS: 142

RATING DATE 142
INITIALS 142
ALT. OPERATING TYPE 142
ALT. INVENTORY TYPE 142
ALT. OPERATING RATING 142
ALT. INVENTORY RATING 142
TRUCK TYPE 1 143
TRUCK TYPE 2 143
TRUCK TYPE 3 143
LOAD RATING REVIEW REQUIRED 143

INVENTORY TAB - ID/ADMIN (SCREEN 1 OF 5) 143

NAME: 143
AGENCY BRIDGE GROUP 143
AGENCY ADMIN. AREA 144

SPAN INFORMATION: 145

DECK AREA 145
TOTAL LENGTH 145

ROADWAY IDENTIFICATION: 145

ROAD/ROUTE NAME 145
NBI ROADWAY 145

TRAFFIC AND ACCIDENTS: 145

MEDIANS 145
SPEED 146
ADT CLASS 146
DETOUR SPEED 146
ACCIDENT COUNT 146
ACCIDENT RATE 146

ALTERNATE CLASSIFICATIONS: 146

SCHOOL BUS ROUTE 146
TRANSIT ROUTE 146
CRITICAL TRAVEL ROUTE 147

AGENCY ROADWAY FIELDS: 147

STRUCTURE UNIT INFORMATION: 147

UNIT ID 147
DESCRIPTION 147

TYPE *147*
DEFAULT BRIDGE UNIT *148*
FRACTURE CRITICAL DETAILS *148*

AGENCY BRIDGE ITEMS: FDOT DOES NOT USE THESE FIELDS. **148**

SCHEDULE TAB **149**

SUMMARY: **149**

INSPECTOR *149*
PRIMARY TYPE *149*
REVIEW REQUIRED *149*
INSPECTION GROUP *149*
NATIONAL BRIDGE INVENTORY *150*
ELEMENT *150*
FRACTURE CRITICAL *150*
UNDERWATER *150*
OTHER SPECIAL *150*

SCHEDULE: **151**

NBI *151*
ELEMENT *151*
FRACTURE CRITICAL *151*
UNDERWATER *151*
OTHER SPECIAL *151*

BRIDGE INSPECTION RESOURCES: **151**

NEXT INSPECTOR *151*
BRIDGE GROUP *151*
CREW HOURS *152*
FLAGGER HOURS *152*
HELPER HOURS *152*
SNOOPER HOURS *152*
SPECIAL CREW HOURS *152*
SPECIAL EQUIP HOURS *152*

***BRIDGE - ADD ON APPLETS* - FDOT BRIDGE RELATED INFORMATION** **153**

MISCELLANEOUS BRIDGE (TAB 1 OF 5) **153**

PARALLEL BRIDGE SEQ *153*
CHANNEL DEPTH *153*
RADIO FREQUENCY *153*
PHONE NUMBER *153*
EXCEPTION DATE *153*
EXCEPTION TYPE *154*
ACCEPTED BY CONSTRUCTION *154*
BRIDGE RAIL 1 ..... *154*
BRIDGE RAIL 2 ..... *155*
ELECTRICAL DEVICES *155*
CULVERT TYPE *156*
MAINTENANCE YARD *156*
FIHS ON/OFF *158*
PREVIOUS STRUCTURE *158*

SECOND PREVIOUS STRUCTURE 158
RELATED FINPROJ NUMBER 158
PERFORMANCE RATING 159
REPLACEMENT STRUCTURE 159
MAST ARM LOCATION 159
MAST ARM MANAGING AGENCY ID 159

LOAD RATING 1 (TAB 2 OF 5) 160

HS20 GOVERNING SPAN LENGTH 160
LOAD RATING ORIGINATION 160
LOAD RATING DATE – (AS BID) 160
METHOD OF CALCULATION 160
LOAD DISTRIBUTION FACTOR 161
IMPACT FACTOR 161
DESIGN METHOD 161
DESIGN MEASURE 161
RECOMMENDED SINGLE UNIT TRUCK 162
RECOMMENDED COMBINATION UNIT TRUCK 162
RECOMMENDED TANDEM TRUCK 162
SINGLE TRUCK 2 AXLES 162
SINGLE TRUCK 3 AXLES 162
SINGLE TRUCK 4 AXLES 162
COMBINATION TRUCK 3 AXLES 163
COMBINATION TRUCK 4 AXLES 163
COMBINATION TRUCK 5 AXLES 163
TRUCK TRAILER 5 AXLES 163
POSTING WEIGHT 163
POSTING SINGLE UNIT 163
POSTING COMBINATION 164
POSTING TANDEM TRUCK 164
GOV FB SPAN 165
GOV FB SPACING 165
FB HS20 RATING 165
FB SU4 RATING 165
FB PRESENT 165
FB INV RATING FACTOR 166
FB OPR RATING FACTOR 166
FB FL 120 166
FL 120 LONG GOV SPAN 166
FL 120 TRANS 166
SINGLE AXLE TRANS 167
TANDEM AXLE TRANS 167
WING SPAN 167
WEB TO WEB SPAN 167
HS20 OPR RATING MAX SPAN 167
FL 120 LONG MAX SPAN 167
PILE DRIVING RECORD 168
FOUNDATION TYPE 168
MODE OF FLOW 168
RATING SCOUR EVALUATION 169
HIGHEST SCOUR EVALUATION PERFORMED 169
SCOUR RECOMMENDATION I 170
SCOUR RECOMMENDATION II 170

SCOUR RECOMMENDATION III *171*
SCOUR ELEVATION *171*
ACTION ELEVATION *171*
STORM FREQUENCY *171*

WARRANTY (TAB 5 OF 5) 172

WARRANTY *172*
EXPIRATION DATE *172*
COMMENTS *172*
APPENDICES *173*
APPENDIX A - CODING NEW STRUCTURES IN PONTIS *173*
APPENDIX A - CONTINUED *174*
APPENDIX B - REQUIRED DATA FOR OVER LANE SIGN STRUCTURES, HIGH MAST LIGHT POLES AND TRAFFIC SIGNAL MAST ARMS *175*
APPENDIX B – CONTINUED *176*
APPENDIX C - ADDITIONAL SIGN CODING INSTRUCTIONS *177*
APPENDIX D - REINFORCED CONCRETE DECK ARCHES *179*
APPENDIX D – CONTINUED *180*
APPENDIX E - AS-BID/AS-BUILT LOAD RATING FLOW CHART *181*
APPENDIX F – STRUCTURES OPENED TO TRAFFIC BEFORE FINAL ACCEPTANCE BY CONSTRUCTION *183*
APPENDIX G – PROMPT CORRECTIVE ACTION *185*
Appendix H - NBIS Inspection of Structures under Construction (23 CFR 650 Subpart C) *187*

PART 1

NATIONAL BRIDGE INVENTORY (NBI) DATA ITEMS

This page is intentionally left blank.

STATE CODE (1) (3 digits)

Table Name: Bridge Field Name: fips_state

The first 2 digits are the Federal Information Processing Standards (FIPS) code for States, and the third digit is the FHWA region code. This is a required field for over-lane sign structures, high mast light poles and traffic signal mast arms. (Florida will have an FHWA region code of 4-Atlanta.)

Code	State	Code	State
01	Alabama	30	Montana
02	Alaska	31	Nebraska
04	Arizona	32	Nevada
05	Arkansas	33	New Hampshire
06	California	34	New Jersey
08	Colorado	35	New Mexico
09	Connecticut	36	New York
10	Delaware	37	North Carolina
11	District of Columbia	38	North Dakota
12	Florida	39	Ohio
13	Georgia	40	Oklahoma
15	Hawaii	41	Oregon
16	Idaho	42	Pennsylvania
17	Illinois	44	Rhode Island
18	Indiana	45	South Carolina
19	Iowa	46	South Dakota
20	Kansas	47	Tennessee
21	Kentucky	48	Texas
22	Louisiana	49	Utah
23	Maine	50	Vermont
24	Maryland	51	Virginia
25	Massachusetts	53	Washington
26	Michigan	54	West Virginia
27	Minnesota	55	Wisconsin
28	Mississippi	56	Wyoming
29	Missouri	72	Puerto Rico

Location: Inventory Tab – ID/Admin (Screen 1 of 5)

HIGHWAY AGENCY DISTRICT (2)

Table Name: Bridge Field Name: district

The highway district in which the bridge is located should be coded in accordance with the FDOT Highway Managing District Number. This is a required field for over-lane sign structures, high mast light poles and traffic signal mast arms.

EXCLUSIVE CODE	HIGHWAY DISTRICT
01	DISTRICT 1 - BARTOW
02	DISTRICT 2 - LAKE CITY
03	DISTRICT 3 - CHIPLEY
04	DISTRICT 4 - FORT LAUDERDALE
05	DISTRICT 5 - DELAND
06	DISTRICT 6 - MIAMI
07	DISTRICT 7 - TAMPA
08	DISTRICT 8 - TURNPIKE
09	CENTRAL OFFICE (Use for Deleted Structures)

Location: Inventory Tab – ID/Admin (Screen 1 of 5)

COUNTY (3)

Table Name: Bridge Field Name: county

Code the county in which the bride is located according to the Federal Information Processing Standards (FIPS) code specified by the U.S. Census of Population and Housing-Geographic Identification Code Scheme (GICS). When a bridge is located across a county boundary, code the county which has the maintenance responsibility. This is a required field for over-lane sign structures, high mast light poles and traffic signal mast arms.

EXCLUSIVE CODE	COUNTY	EXCLUSIVE CODE	COUNTY
-1	Unknown	069	(11) Lake
001	(26) Alachua	071	(12) Lee
003	(27) Baker	073	(55) Leon
005	(46) Bay	075	(34) Levy
007	(28) Bradford	077	(56) Liberty
009	(70) Brevard	079	(35) Madison
011	(86) Broward	081	(13) Manatee
013	(47) Calhoun	083	(36) Marion
015	(01) Charlotte	085	(89) Martin
017	(02) Citrus	086	(87) Miami Dade
019	(71) Clay	087	(90) Monroe

021	(03) Collier	089	(74) Nassau
023	(29) Columbia	091	(57) Okaloosa
027	(04) De Soto	093	(91) Okeechobee
029	(30) Dixie	095	(75) Orange
031	(72) Duval	097	(92) Osceola
033	(48) Escambia	099	(93) Palm Beach
035	(73) Flagler	101	(14) Pasco
037	(49) Franklin	103	(15) Pinellas
039	(50) Gadsden	105	(16) Polk
041	(31) Gilchrist	107	(76) Putnam
043	(05) Glades	109	(78) St. Johns
045	(51) Gulf	111	(94) St. Lucie
047	(32) Hamilton	113	(58) Santa Rosa
049	(06) Hardee	115	(17) Sarasota
051	(07) Hendry	117	(77) Seminole
053	(08) Hernando	119	(18) Sumter
055	(09) Highlands	121	(37) Suwannee
057	(10) Hillsborough	123	(38) Taylor
059	(52) Holmes	125	(39) Union
061	(88) Indian River	127	(79) Volusia
063	(53) Jackson	129	(59) Wakulla
065	(54) Jefferson	131	(60) Walton
067	(33) Lafayette	133	(61) Washington

Location: Inventory Tab – ID/Admin Identification (Screen 1 of 5)

PLACE CODE (4)

Table Name: Bridge Field Name: placecode

Cities, towns, townships, villages, and other census-designated places shall be identified using the Federal Information Processing Standards (FIPS) codes given in the current version of the Census of Population and Housing -Geographic Identification Code Scheme. If there is no FIPS place code, then code all zeros. This is a required field for over-lane sign structures, high mast light poles and traffic signal mast arms.

Location: Inventory Tab – ID/Admin (Screen 1 of 5)

INVENTORY ROUTE (5)

The inventory route must be for the highway route being inventoried. The inventory route coding is divided into five segments.

SEGMENT	DESCRIPTION	LENGTH
A	Record Type	1st position
B	Route System Prefix	2nd position
C	Route Designation	3rd position
D	Route Number	4th - 8th position
E	Route Direction Suffix	9th position

SEGMENT A - RECORD TYPE (First Position)

Table Name: Roadway Field Name: on_under

There are two types of bridge inventory route records: "on" (complete) and "under" (partial). Code the first left most position using one of the following codes:

EXCLUSIVE CODES	DESCRIPTION
1	A structure carrying highway traffic "on" the inventory route (requires a complete inventory record).
2	A single highway route "under" the inventory route structure (requires only a partial record). A single non-highway traffic structure (railroad, pedestrian walkway, building, over-lane sign structure, retaining wall, high mast light pole or traffic signal mast arm) which the inventory route goes "under" (requires a partial record). A highway traffic tunnel "on" the inventory route (requires a partial record).
A,B,C....Z	Two or more highway routes which go "under" the inventory route (requires a partial record).

"ON" Records

1. Each structure carrying highway traffic must have a type code = 1 (numeric) requiring a complete inventory record.

2. An inventory record code type 1 indicates that all applicable BID items must be coded in respect to the structure and the inventory route.

"UNDER" Records

1. A single route "under" the inventory route structure requires a record code type 2.

2. If two or more routes pass "under" the inventory route structure on separate roadways, then separate "under" records must be coded alphabetically, consecutively and in order of importance as; Defense, Federal-Aid System, State Highway, County Highway, City Street, etc. However, if two or more routes "under" the structure are "on the same roadway", only one record is coded.

3. When the structure does not carry a highway, but carries a railroad, pedestrian traffic, or even a building and no "on" record is coded, only the following appropriate items must be coded: Items 1, 3-11, 16, 17, 19, 20, 26-30, 42, 43, 47-49, 100-104, 109 and 110.

4. For "under" record or tunnel (when codes "2" or "A" through "Z" are used), only the following items must be coded: Items 1, 3-11, 16, 17, 19, 20 , 26-30, 42, 43, 47-49, 100-104, 109 and 110.

5. For over-lane sign structures, high mast light poles and traffic signal mast arms only an “under” record should be used.

SEGMENT B - ROUTE SYSTEM PREFIX (Second Position)

Table Name: Roadway Field Name: kind_hwy

In the second segment, identify the route system prefix for the inventory route using one of the following codes:

EXCLUSIVE CODES	DESCRIPTION
1	Interstate Highway
2	U.S. Numbered Highway
3	State Highway
4	County Highway
5	City Street
6	Federal Lands Road (Road under the authority of a federal agency for example in a federal park.)
7	State Lands Road (A state controlled road on state land, for example in a state park or forest.)
8	Other (include toll roads not otherwise indicated or identified above)

When 2 or more routes are concurrent, the highest class of route will be used. The hierarchy is in the order listed above. This is a required field for over-lane sign structures, high mast light poles and traffic signal mast arms.

SEGMENT C - DESIGNATED LEVEL OF SERVICE (Third Position)

Table Name: Roadway Field Name: levl_srvc

This is a required field for over-lane sign structures, high mast light poles and traffic signal mast arms. In the third segment, identify the designated type of service for the inventory route using one of the following codes:

EXCLUSIVE CODES	DESCRIPTION
0	None of below (county dirt road)
1	Mainline
2	Alternate
3	Bypass
4	Spur
6	Business
7	Ramp, Wye, Connector, etc.
8	Service and/or unclassified frontage road

SEGMENT D - ROUTE NUMBER (Fourth through Eighth Positions)

Table Name: Roadway Field Name: routenum

Code the route number of the inventory route in Segment D. This value shall be right justified in the field with leading zeroes filled in (see examples following).

If concurrent routes are of the same hierarchy level, denoted by the route system prefix, the lowest numbered route shall be coded. Code 00000 for bridges on roads without route numbers. This is a required field for over-lane sign structures, high mast light poles and traffic signal mast arms.

SEGMENT E - ROUTE DIRECTION SUFFIX (Ninth Position)

Table Name: Roadway Field Name: dirsuffix

For Segment E, code the direction suffix to the route number of the inventory route when it is part of the route number, by using one of the following codes:

EXCLUSIVE CODES	DESCRIPTION
0	Not Applicable
1	North
2	East
3	South
4	West

In some cases, letters may be used with route numbers and as part of the route numbers and not as indicated direction. In such cases, the letter should be included in the 5-position Route Number (Segment D). This is a required field for over-lane sign structures, high mast light poles

and traffic signal mast arms.

Location: Description Tab - Roadway Information Maintenance Window (Screen 2 of 4)

DATA REFERENCES:

Straight line diagrams and state and count highway maps may be acquired through the Office of Highway Statistics and bridge plans through the State Structures Design Office. The straight line diagram of road inventory is a schematic inventory of each highway section.

EXAMPLES:

CASE		CODE
1	County Route 173, on	141001730
	Interstate 84, under	211000840
2	Interstate 95, on	111000950
	Interstate 70S, under	211000703
3	Interstate 495, on	111004950
	St. Rt. 120(Defense Rt.), under	A31001200
	Alternate State Rt. 130, under	B32001300
4	Interstate 65, on	111000650
	State Route 44, under	231000440
	State Route 44, on	131000440
	County Route 1937, under	243019370
5	County Route 7634, on	142076340
	County Route 125 Ave., under	256001250
	County Route 125 Ave., on	156001250
	State Route 6, under	231000060

Sketches for example cases 1-5, defining Segments A and D, are shown in Figures 5-1 through 5-5.

RECORD TYPE EXAMPLES

Case 1 - Standard Highway Overpass (Single Structure)

State Route 173 "on" Structure Number 1.
Interstate 84 "under" Structure Number 1.

SIA Records Required

Structure No.	Segment A Code	Segment D Code
1	1	00173
1	2	00084

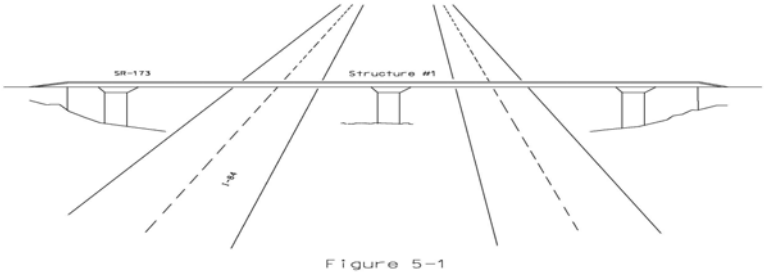

Figure 5-1

<u>Case 2 - Standard Highway Overpass (Dual Structures)</u>

Interstate 95 "on" Structure Number 1 and 2.
Interstate 70 "under" Structure Number 1 and 2.

<u>SIA Record Required</u>

Structure Number	Segment A Code	Segment D Code
1	1	00095
1	2	00070
2	1	00095
2	2	00070

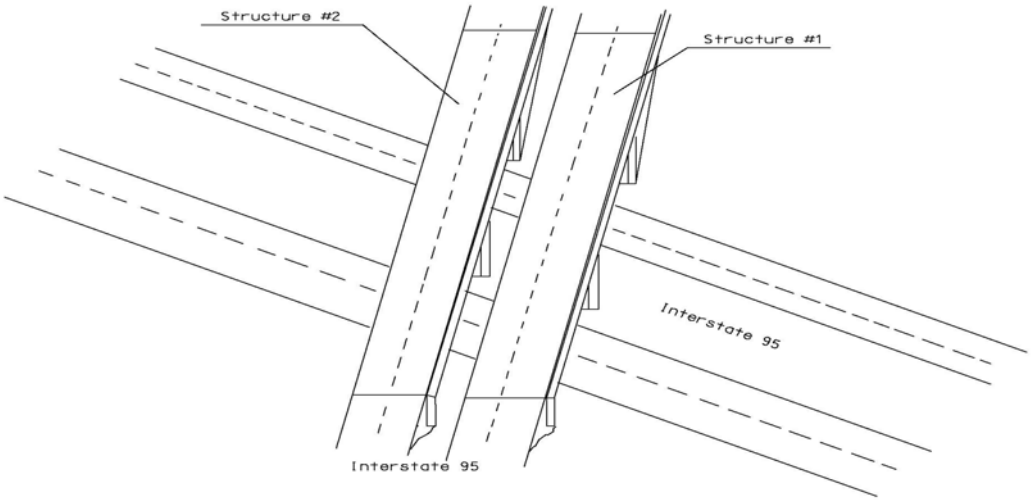

Figure 5-2

<u>Case 3 - Standard Overpass with Multiple Underpassing Routes (Under One Structure</u>

Interstate 495 "on" Structure Number 1.
State Route 120 "under" Structure Number 1.

State Route 130 "under" Structure Number 1.

SIA Records Required

Structure No.	Segment A Code	Segment D Code
1	1	00495
1	A	00120
1	B	00130

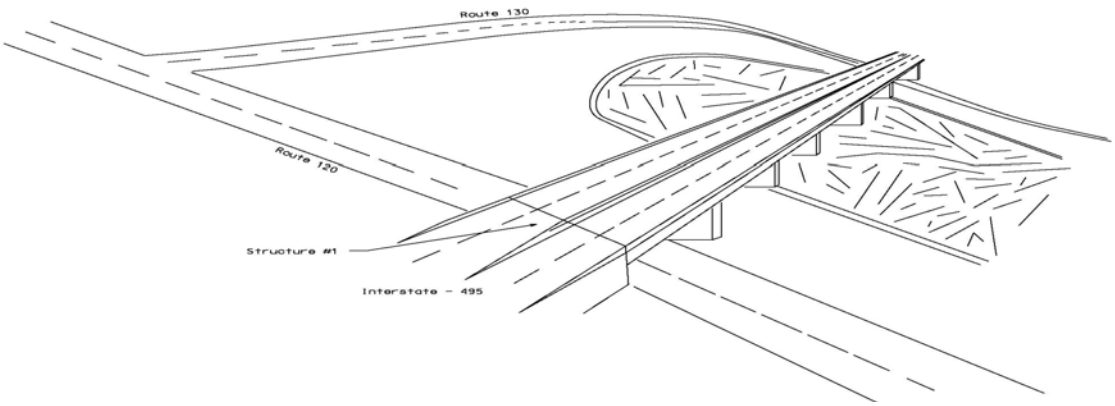

Figure 5-3

Case 4 - Multi-level Structures with Common Point Intersection

Interstate 65 "on" Structure Number 1.
State Route 44 "under" Structure Number 1.
State Route 44 "on" Structure Number 2.
County Route 1937 "under" Structure Number 2.

SIA Records Required

Structure No.	Segment A Code	Segment D Code
1	1	00065
1	2	00044
2	1	00044
2	2	01937

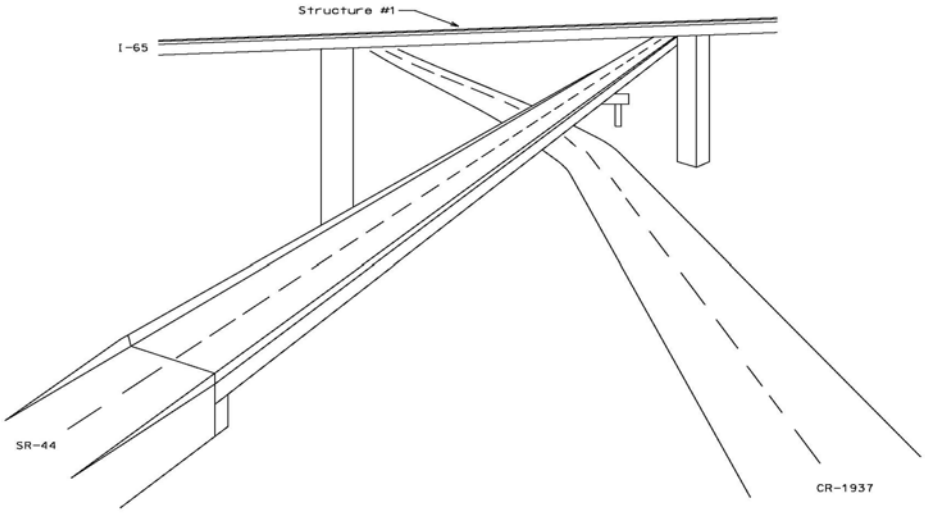

Figure 5-4

Case 5 - Multi-level Structures with Uncommon Point Route Intersections.

County Route 763 "on" Structure Number 1.
City Street 125th "under" Structure Number 1.
City Street 125th "on" Structure Number 2.
State Route 6 "under" Structure Number 2.

SIA Records Required

Structure No.	Segment A Code	Segment D Code
1	1	00763
1	2	00125
2	1	00125
2	2	00006

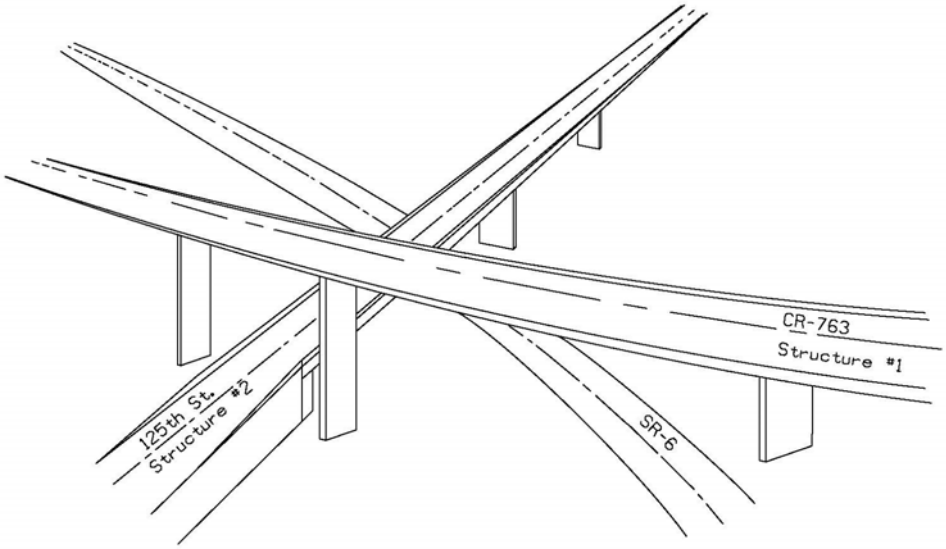

Figure 5-5

Structure Inventory Direction

Standard practice for "route" orientation or direction for recording data is to proceed from a point of beginning from West to East, or from South to North, for highways with or without milepoint/kilometer markers. Route orientation shall conform to the direction of increasing stationing shown on the Department's Straight Line Diagrams.

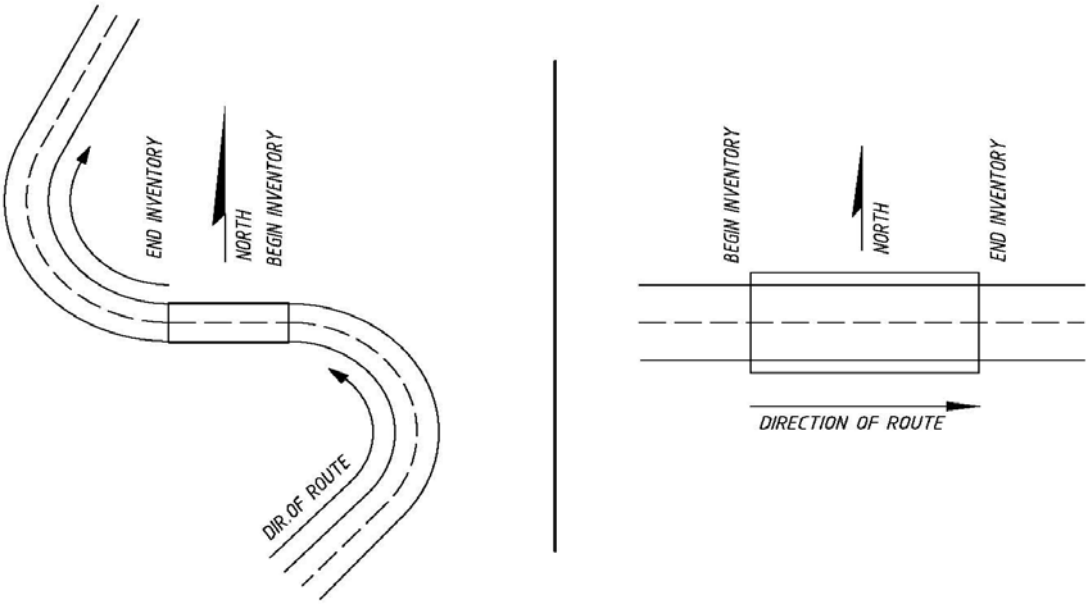

Figure 5-6

Location: Inventory Tab – Roads Window (Screen 3 of 5)

FEATURES INTERSECTED (6)

Segment A	Table Name: Bridge	Field Name: featint
Segment B	Table Name: Roadway	Field Name: crit_feat

Code the name or names of the features intersected by the structure whether the features are over or under the structure. When one of the features intersected is another highway, the signed number or name of the highway (e.g., I-81, US 51, SR 552, Mill Road), should appear first (leftmost) in the field. The names of any other features should follow separated by a semicolon or a comma. This is a required field for over-lane sign structures, high mast light poles and traffic signal mast arms.

The use of Segment B is no longer required.

DATA REFERENCES: State, County and Defense Maps; Bridge Plans.

EXAMPLE: CODE

Interstate 95 southbound lanes ALLIGATOR CREEK *
over Alligator Creek. 25

Location: Inventory Tab - Roads Maintenance Window (Screen 3 of 5)

FACILITY CARRIED BY STRUCTURE (7)

Table Name: Bridge Field Name: facility

Code the facility being carried by this structure by a narrative description. This item should be left justified.

For parallel structures include direction (i.e. NB, SB, EB, WB)

Bridges on Indian Reservation roads shall be identified by this item. Indian Reservation roads are defined as public roads that are located within or provide access to an Indian Reservation. The terminus of a road providing access to an Indian Reservation or other Indian lands, is the point at which these roads intersect with a road functionally classified as a collector or higher classification (outside the reservation boundary), in both urban and rural areas. In the case of access from an Interstate Highway, the terminus is the first interchange outside the reservation. For Indian Reservation bridges, the first three digits should be coded with "IRR" followed by other appropriate entry information.

DATA REFERENCES:
Bridge Plans, Straight Line Diagrams, State and County Maps.

EXAMPLES:
S to W Ramp, Ramp I-495 to I-95, C & O Railroad, Great Eastern Pipeline

Location: Inventory Tab - Roads Window (Screen 3 of 5)

STRUCTURE NUMBER (8)

Table Name: Bridge Field Name: struct_num

Structure numbers are assigned by the District Structures and Facilities Engineer.

Bridge number will be six positions in length. The first two positions will define the county in which the bridge is located and the remaining four positions will assign a unique number in the county. These six positions should be right justified.

The bridge number must be unique for each bridge within the state. **Do not change the structure number without obtaining permission of the State Maintenance Office. Changing this field without the assistance of the State Maintenance Office and the Office of**

Information System may result in dire consequences and difficulty in retrieving your structure.

In some cases when bridges are widened, bridge numbers will have to be revised. When two independent structures are widened and joined, the widened structure will be considered one bridge if shear is transferred through the widened portion of the structure. The specific conditions are enumerated on Figure 8-1 through Figure 8-2.

(When the superstructure and the majority of the substructure are separate, separate bridge numbers should be assigned. If the only shear transfer is through the abutments or footings of bents, the structures should be considered separate.)

This is a required field for over-lane sign structures, high mast light poles and traffic signal mast arms.

Note: The field "brkey" is used in the BMS database to relate various tables. It will generally be the same as the structure number, but if the bridge number is changed this structure number may not be in agreement with the brkey. For this reason it is inadvisable to change the bridge number after the record is created. If a structure ID must be changed, then contact the State Maintenance Office for assistance.

Location: Inventory Tab – ID/Admin Window Identification (Screen 1 of 5)

INSIDE WIDENING

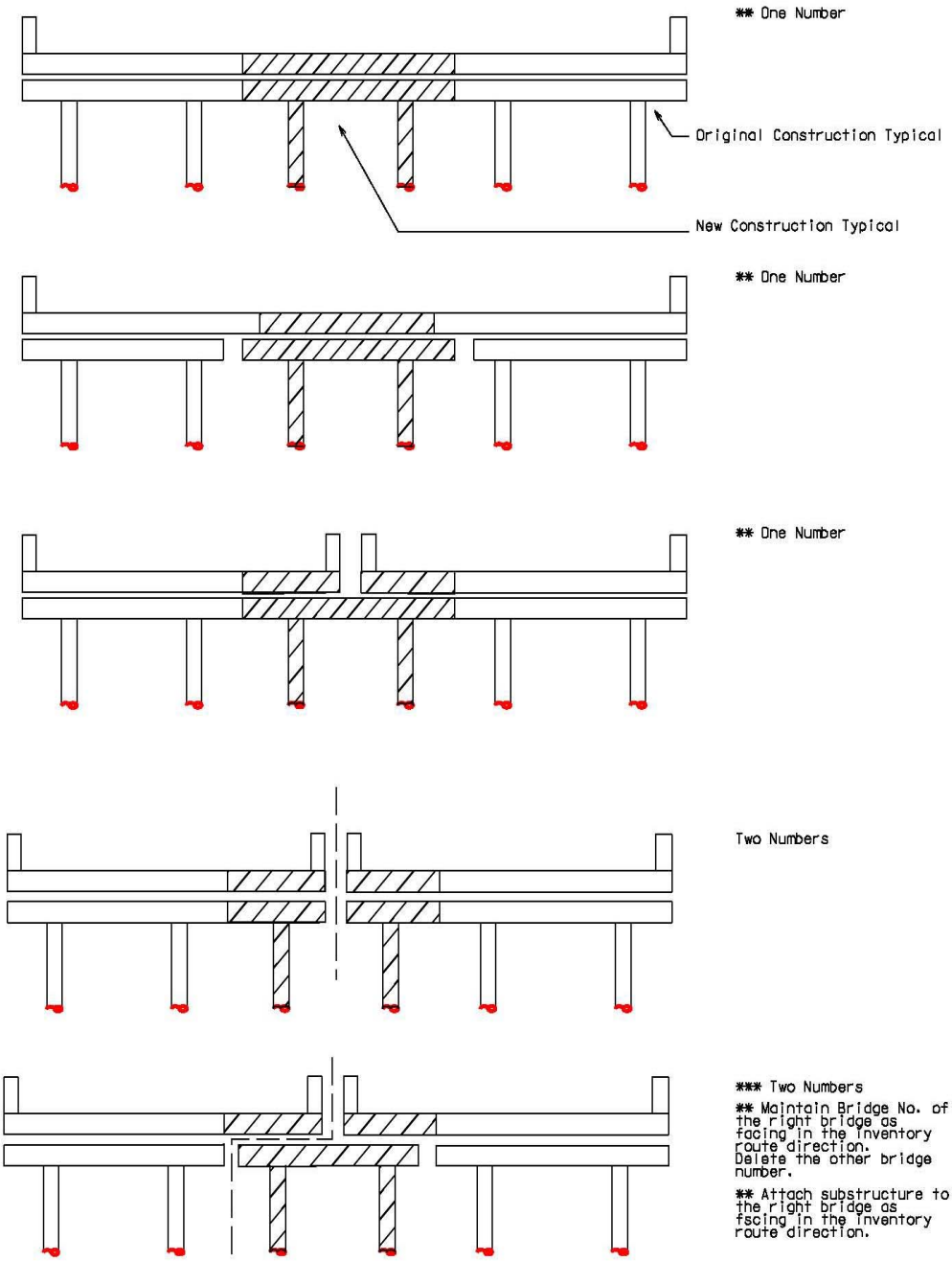

Figure 8 -1

OUTSIDE WIDENING

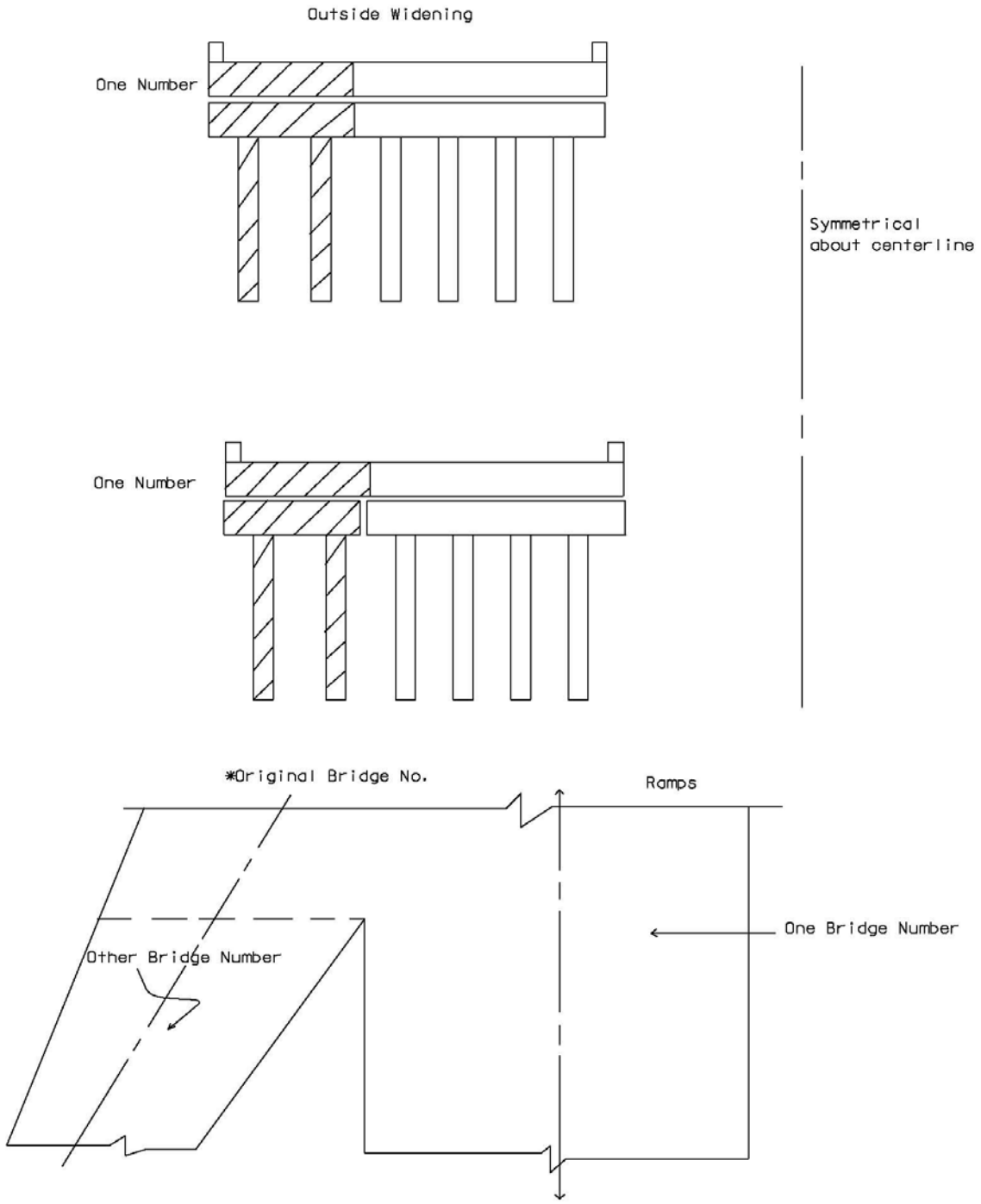

Figure 8-2

LOCATION (9)

Table Name: Bridge Field Name: location

This item will contain a narrative description of the bridge location which should be keyed to a distinguishable feature (e.g., road junctions, topographical features), of an official Department of Transportation map. If the bridge has no name and there are no nearby distinguishable features shown on the map, the bridge location may be coded by township, range and the section or the location may be keyed to other locally well known features. This item should be left justified without trailing zeroes. This is a required field for over-lane sign structures, high mast light poles and traffic signal mast arms.

Location: Inventory Tab – ID/Admin (Screen 1 of 5)

INVENTORY ROUTE, MINIMUM VERTICAL CLEARANCE (10)

Table Name: Roadway Field Name vclrinv

The vertical clearance over the inventory route identified in Item A5-Inventory Route should be coded to the nearest hundredth of a meter (with an assumed decimal point), whether the route is "on" the structure or "under" the structure. The minimum vertical clearance for each 3 meter width of the pavement or roadway lane should be measured, and only the greatest of those minimum vertical clearances shall be coded. (See Figure D1-1A).

For bridge having multiple openings, the minimum vertical clearances for each opening should be measured, but only the greatest dimension among those vertical clearances for the two of more openings shall be coded regardless of the direction of travel (See Figure D1-1B). Where no restriction exists, code 9999. Coding of actual clearances between 30.0 and 99.9 meters to an exact measurement is optional.

This is a required field for over-lane sign structures, high mast light poles and traffic signal mast arms. For over-lane signs code actual clearance, if sign structure is not over pavement code 99.99. For high mast light poles code 99.99.

Location: Inventory Tab - Roads Window (Screen 3 of 5)

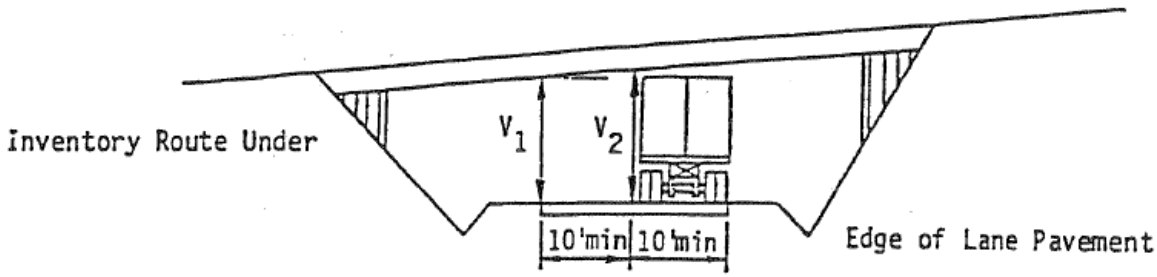

Minimum Vertical Clearance: V_1, V_2

Greatest Minimum Vertical Clearance: V_2; Code V_2

Figure D1-1A

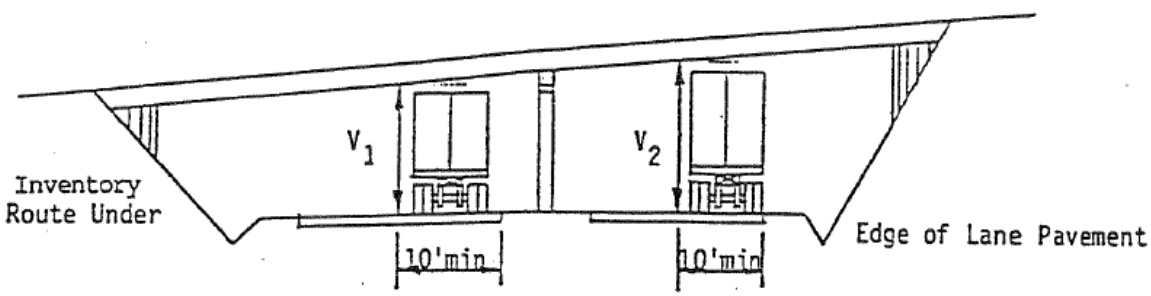

Minimum Vertical Clearance: V_1, V_2

Greatest Minimum Vertical Clearance of Both Openings: V_2; Code V_2

Figure D1-1B

KILOMETERPOINT (11)

Table: Roadway Field Name: kmpost

The milepoint location of the structure should be recorded and coded while Pontis is in the English unit mode. The milepoint will refer to the beginning of the bridge in the direction of increasing mileage. Code a 7-position number to represent the milepoint to thousandths of a mile. Code all zeroes if a milepoint location cannot be determined or is not appropriate. This is a required field for over-lane sign structures, high mast light poles and traffic signal mast arms.

If the milepoint location of the structure is at the beginning of the route mileage, code with a nominal value of 0000001 rather than 0000000.

Location: Description Tab – Inventory Tab – Roads Window (Screen 3 of 5)

BASE HIGHWAY NETWORK (12)

Table: Roadway Field Name: onbasenet

This item is to be coded for all records in the inventory. The Base Highway Network includes the through lane (mainline) portions of the NHS, rural/urban principal arterial system and rural minor arterial system. Ramps, frontage roads and other roadways are not included in the Base Network. For the inventory route identified in Item 5 - Inventory Route, indicate whether the inventory route is on the Base Highway Network or not on the that network. Use one of the following codes: This is a required field for over-lane sign structures, high mast light poles and traffic signal mast arms.

Code	Description
0	Inventory Route is not on the Base Network
1	Inventory Route is on the Base Network

Location: Inventory Tab – Roads Window (Screen 3 of 5)

LRS - INVENTORY ROUTE, SUBROUTE NUMBER (13)

The Linear Referencing System (LRS) inventory route and subroute numbers to be reported in this item must correspond to the LRS inventory route and subroute numbers reported by the state for HPMS (Highway Performance Monitoring System). This is a required field for over-lane sign structures, high mast light poles and traffic signal mast arms.

SEGMENT A - LRS Inventory Route (First 10 Positions)

Table: Roadway Field Name: lrsinvrt

Code the LRS inventory route, right justified and zero filled. This field is made up of two leading zeroes, the county number, section number and subsection number.

Example: Collier County (03), Section 175, Subsection 000. Code as 0003175000.

SEGMENT B - LRS Inventory Subroute (11th and 12th Positions)

Table: Roadway Field Name: subrtnum

Code the LRS Inventory Subroute right justified and zero filled. Currently this segment is not used by the Department and should be coded with zeroes.

Location: Inventory Tab - Roads Window (Screen 3 of 5)

LATITUDE (16)

Table: Bridge Field Name: latitude

For bridges on defense highways, record and code the latitude of each in degrees, minutes, seconds and hundredths of a second. The point of the coordinate is to be measured at the center of the bridge. This is a required field for over-lane sign structures, high mast light poles and traffic signal mast arms.

Location: Inventory Tab – ID/Admin Window (Screen 1 of 5)

LONGITUDE (17)

Table: Bridge Field Name: longitude

For bridges on defense highways, record and code the longitude of each in degrees, minutes, seconds and hundredths of a second. The point of the coordinate is to be measured at the center of the bridge. This is a required field for over-lane sign structures, high mast light poles and traffic signal mast arms.

Location: Inventory Tab – ID/Admin Window (Screen 1 of 5)

BYPASS, DETOUR LENGTH (19)

Table: Roadway Field Name: bypasslen

Indicate the actual length to the nearest kilometer of the detour length. The detour length should represent the total additional travel for a vehicle which would result from closing of the bridge.

The factor to consider when determining if a bypass is available at the site is the potential for

moving vehicles, including military vehicles, around the structure. This is particularly true when the structure is in an interchange. For example, a bypass likely would be available in the case of diamond interchanges, interchanges where there are service roads available, or other interchanges where the positioning and layout of the ramps are such that they could be used without difficulty to get around the bridge.
If a ground level bypass is available at the bridge site for the route, enter"000".

If the bridge is one of twin bridges and is not at an interchange, code "001" to indicate that the other twin bridge can be used as a temporary bypass. In other cases, enter the actual length to the nearest kilometer of the detour length.

When the detour length is actually shorter than the original route enter "000".

The route selected for the detour should be of an equal or better classification of highway, including any bridges located on the highway. This item should be entered for each bridge which carries highway traffic.

Code 199.0 for 199 km (123.65 miles) or greater. Code 99.0 if entering in English units and Pontis will automatically place 199.0 km in metric units.

EXCLUSIVE CODES	DESCRIPTION
000	Ground level bypass
001	Twin bridges, one of which may be used as a temporary bypass
002-98	Actual length to the nearest mile of the detour route.
99	More than 99 miles

DATA REFERENCES: County Bridge Maps.

EXAMPLES (English input mode):

CODE	
Diamond interchange, bridge bypassable	0.00
Cloverleaf, not bypassable; 8 mile detour	8.00
Bridge over river, 71 mile detour	71.0
Bridge over highway, no interchange bypassable at ground level	0.00
Structure on dead end road	99.0

Location: Inventory Tab - Roads Window (Screen 3 of 5)

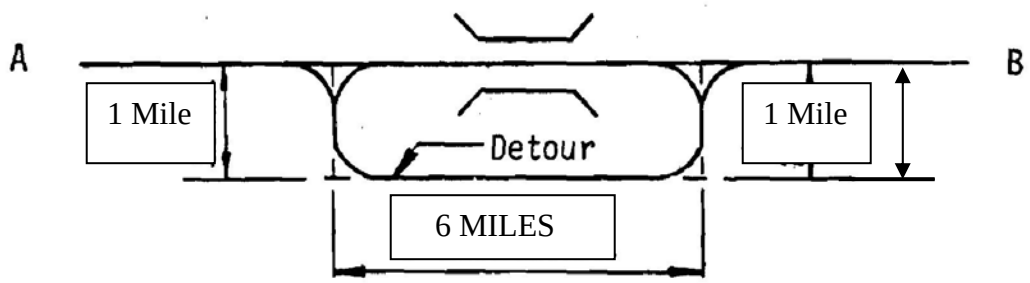

Bypass, Detour Length A to B = 2 miles

Figure 19-1

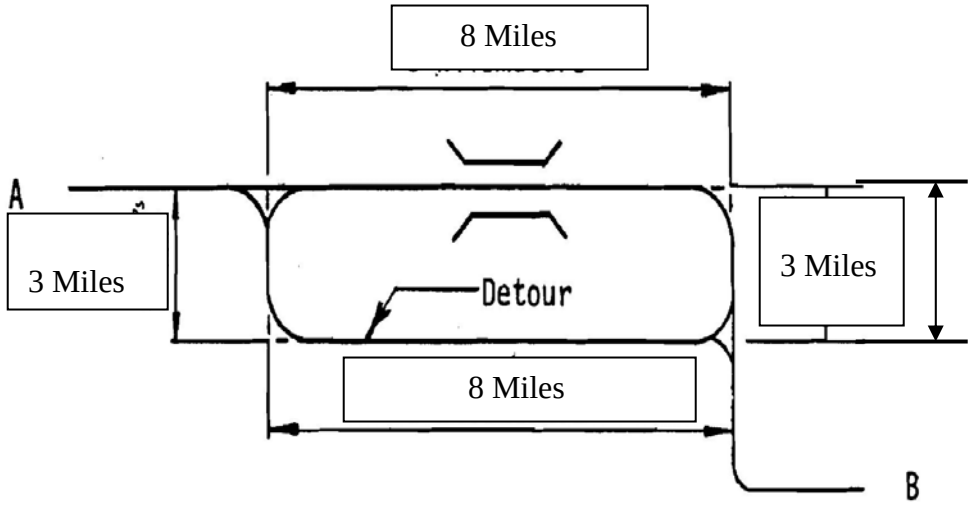

Bypass, Detour Length A to B = 0 miles

Figure 19-2

TOLL (20)

Table: Roadway Field Name: tollfac

The toll status of the structure is indicated by this item. Interstate toll segments under Secretarial Agreement Title 23 - United States Code - Highway Section 129 as amended by 1991 ISTEA and prior legislation) shall be identified separately. This is a required field for over-lane sign structures, high mast light poles and traffic signal mast arms. Use one of the following codes:

EXCLUSIVE CODE	DESCRIPTION
1	Toll bridge. Tolls are paid specifically to use the structure.
2	On toll road. The structure carries a toll road, that is, tolls are paid to use the facility, which includes both the highway and the structure.
3	On free road. The structure is toll-free and carries a toll-free highway.
4	On Interstate toll segment under Secretarial Agreement. Structure functions as a part of the toll segment.
5	Toll bridge is a segment under Secretarial Agreement. Structure is separate agreement from highway segment.

EXAMPLE:	CODE
Turnpike Bridges	2

Location: Inventory Tab - Roads Information Window (screen 3 of 5)

MAINTENANCE RESPONSIBILITY (21)

Table: Bridge Field Name: custodian

The actual name(s) of the agency(s) responsible for the maintenance of the structure shall be recorded on the inspection form. The codes below shall be used to represent the type of agency that has primary responsibility for maintaining the structure. If more than one agency has equal maintenance responsibility, code one agency in the hierarchy of State, Federal, county, city, railroad and other private. This is a required field for over-lane sign structures, high mast light poles and traffic signal mast arms.

CODES	DESCRIPTION
01	State Highway Agency
02	County Highway Agency
03	Town or Township Highway Agency
04	City or Municipal Highway Agency
11	State Park, Forest, or Reservation Agency
12	Local Park, Forest, or Reservation Agency
21	Other State Agencies
25	Other Local Agencies
26	Private (other than railroad)
27	Railroad
31	State Toll Authority
32	Local Toll Authority
33	Turnpike
60	Other Federal Agencies (not listed below)
61	Indian Tribal Government
62	Bureau of Indian Affairs
63	Bureau of Fish and Wildlife
64	U.S. Forest Service
66	National Park Service
67	Tennessee Valley Authority
68	Bureau of Land Management
69	Bureau of Reclamation
70	Corps of Engineers (Civil)
71	Corps of Engineers (Military)
72	Air Force
73	Navy/Marines
74	Army
75	NASA
76	Metropolitan Washington Airport Service
80	Unknown

Location: Inventory Tab – ID/Admin (Screen 1 of 5)

OWNER (22)

Table: Bridge Field Name: owner

The actual name(s) of the owner(s) of the bridge shall be recorded on the inspection form. The codes used in Maintenance Responsibility (21) shall be used to represent the type of agency that is the primary owner of the structure. If more than one agency has equal ownership, code one agency in the hierarchy of State, Federal, county, city, railroad, and other private. This is a required field for over-lane sign structures, high mast light poles and traffic signal mast arms.

Location: Inventory Tab – ID/Admin (Screen 1 of 5)

FUNCTIONAL CLASSIFICATION OF INVENTORY ROUTE (26)

Table: Roadway Field Name: funcclass

This is a required field for over-lane sign structures, high mast light poles and traffic signal mast arms. For the inventory route, code the functional classification using one of the following codes:

CODES		DESCRIPTION
	Rural	
01		Principal Arterial - Interstate
02		Principal Arterial - Other
06		Minor Arterial
07		Major Collector
08		Minor Collector
09		Local
	Urban	
11		Principal Arterial - Interstate
12		Principal Arterial - Other Freeways or Expressways
14		Other Principal Arterial
16		Minor Arterial
17		Collector
19		Local

Note: Functional Classes 08, 09 and 19 are non federal aid roads, all other functional classes are federal aid roads.

Location: Inventory Tab – Roads Window (Screen 3 of 5)

YEAR BUILT (27)

Table: Bridge Field Name: yearbuilt

Record and code the year of construction of the structure. Code all 4 digits of the year in which construction of the structure was completed. If the year built is unknown, provide a best estimate. This is a required field for over-lane sign structures, high mast light poles and traffic signal mast arms.

Location: Inventory Tab – ID/Admin Window (Screen 1 or 5)

LANES ON AND UNDER THE STRUCTURE (28)

Table: Roadway Field Name: lanes

This item is used to record the number of lanes being carried on the roadway record. Code for each roadway record the number of lanes on that roadway. This is a required field for over-lane sign structures, high mast light poles and traffic signal mast arms.

Note on Ancillary Structures: For lanes under the structure (route under), on span type sign structures code the number of lanes under the sign structure (include turn lanes that are not separated from the mainline, once there is a separation between the ramp and the mainline do not count the ramp lanes). For cantilever sign structures, high mast light poles and traffic signal mast arms code the number of lanes for the route being inventoried.

Location: Inventory Tab: Roads Window (Screen 3 of 5)

AVERAGE DAILY TRAFFIC (29)

Table Name: Roadway Field Name: adttotal

Code the average daily traffic volume (ADT), for the inventory route identified in Item 5. The ADT must be right justified and the leading positions filled with zeroes. The most recent ADT counts available from the District Office of Planning and Programs should be coded.

Coding of the ADT volume must be consistent with the coding of other items for the structure. For example, parallel bridges with an open median are coded as follows: If Lanes On and Under the Structure (28) and Bridge Roadway Width, Curb-to-Curb (52), are coded for each bridge separately, then the ADT must be coded for each bridge separately (not the total ADT for the route).

Since the coding of this item provides the information of ADT volume for the inventory route and the numeric value will be used in the calculation of sufficiency rating, the coding of this item shall not be changed due to bridge posting or closure.

If Segment A of Type Service (42) is coded 2, 3, or 9, then code ADT as 000001.

Location: Inventory Tab - Roads Window (Screen 3 of 5)

YEAR OF AVERAGE DAILY TRAFFIC (30)

Table: Roadway Field Name: adtyear

Record the year represented by the ADT in Item 29. Code the 4 digits of the year so recorded.

Location: Inventory Tab - Roads Window (Screen 3 of 5)

DESIGN LOAD (31)

Table Name: Bridge Field Name: designload

Use the codes below to indicate the live load for which the structure was designed. The numerical value of the railroad loading should be recorded on the form. Classify any other loading, when feasible, using the nearest equivalent of the loading given below.

EXCLUSIVE CODE	METRIC DESCRIPTION (ENGLISH DESCRIPTION)
0	UNKNOWN (describe in Structure Notes)
1	M 9 (H 10)
2	M 13.5 (H 15 or H-15-44)
3	MS 13.5 (HS 15 or H-15-S12)
4	M 18 (H 20)
5	MS 18 (HS 20 or HS20-S16-44)
6	MS 18 + MOD (HS 20+Mod or H20-S16, Modified for Military Loading)
7	PEDESTRIAN
8	RAILROAD
9	MS 22.5 or greater (HS 25 or greater)
A	HL 93 (HL 93)
B	Greater than HL 93 (Greater than HL 93)
C	OTHER (describe in Structure Notes)

Code other H, M, HS or MS design live loads using the nearest equivalent of the numerical portion of the loading.

Code 0 refers to situations where the design load is unknown due to the absence of plans, design calculations or other information.

Code 6 references MS 18 + Mod (HS20+Mod). In this context, “Mod” indicates the inclusion of military loading.

Use code 9 in situations where the design live load is MS 22.5 (HS 25) or greater.

Code A refers to the standard AASHTO LRFD HL 93 design live load.

Code B refers to the standard AASHTO LRFD HL 93 configuration modified to be greater than the standard HL 93 design live load.

Code C refers to other situations where the design live load is not based upon AASHTO design live load configurations, such as designs based on specific truck loads.

EXCLUSIVE CODES: 0 through 9, A,B,C.

DATA REFERENCES: Bridge Plans, Design Calculations.

Location: Appraisal Tab – Load Ratings (Screen 2 of 2)

APPROACH ROADWAY WIDTH (32)

Table: Roadway Field Name: aroadwidth

Code, to the nearest one-tenth of a foot, a 4 digit number that represents the normal width of the roadway approaching the structure. This dimension will include the width of traffic lanes and the width of the shoulders. This item should reflect the typical roadway width approaching the structure.

A shoulder is defined as an extension of the roadway flush with the adjacent through traffic lane (no drop-offs), capable of supporting legal vehicles during all weather conditions in order to provide an alternate travel path for vehicles in an emergency situation. Un-stabilized grass or dirt, with no base course, flush with and beside the traffic lane is not to be considered a shoulder for this item. Asphalt mowing strips around guardrail are not considered a shoulder.

For curbed approaches, measure the approach width from curb to curb. For closed median structures, the approach median width should be included in this dimension.

When there is a variation between the approaches at either end of the structure, record and code the most restrictive roadway width of the approaches. The measurement should be taken at the starting point of the approach transition. (See Figure 32-3).
EXCLUSIVE CODES: 0001 through 9999.

DATA REFERENCES:
Roadway Plans, Field Measurements and/or Bridge Plans.

EXAMPLES:

LEFT SHOULDER	LEFT ROADWAY	SHOULDER TOTAL	MEDIAN	RIGHT ROADWAY	RIGHT SHOULDER	CODE
1.2	--	--		4.8	1.8	0078
1.8	--	--		10.8	3.6	0162
3.6	14.4	9.0		14.4	3.6	0450
3.0	7.2	4.8		10.8	3.0	0288

The last example above represents the coding method for a structure in which the most restrictive approach has the cross-section shown below.

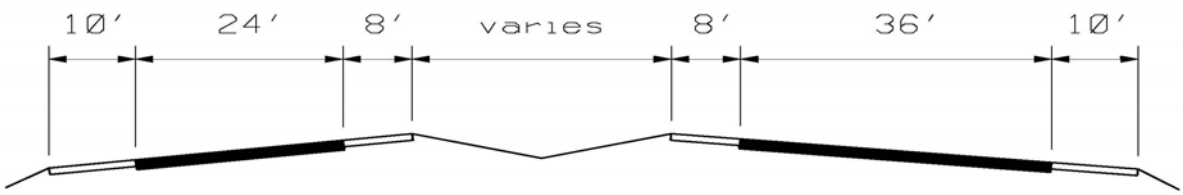

Figure 32-1

Regardless of whether the median is open or closed. The data coded must be compatible with the other related route and bridge data (i.e., if Item 51-Bridge Roadway Width, Curb-to-Curb is for traffic in one direction only, then Items 28, 29, 32, etc. must be for traffic in one direction).

EXAMPLES:

If a ramp is adjacent to the through lanes approaching the structure, it shall be included in the approach roadway width. The total approach roadway width for the example shown below is 94.0 feet.

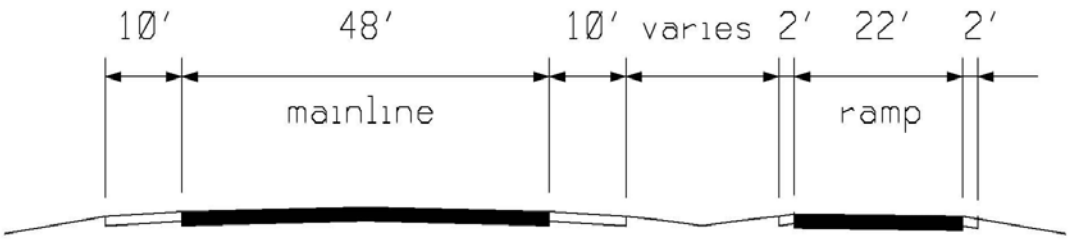

Figure 32-2

Location: Inventory Tab - Roads Window (Screen 3 of 5)

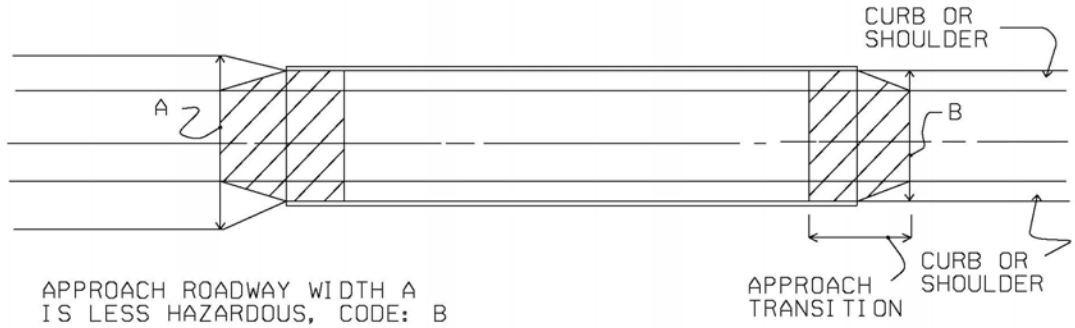

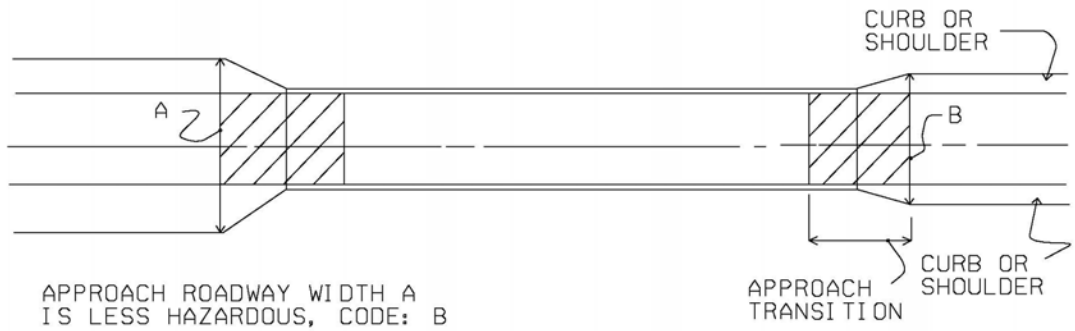

Figure 32-3

BRIDGE MEDIAN (33)

Table: Bridge Field Name: bridgemed

Code the type median on the structure. A median is a separation between traffic lanes that are in opposite directions (see Figure 33-1 and 33-2). Indicate with a 1 digit code if the median is non-existent, open or closed. The median is closed when the area between the two roadways at the structure is bridged over and is capable of supporting traffic. All bridges that carry either 1-way traffic or 2-way traffic separated only by a centerline will be coded "0" for no median

EXCLUSIVE CODES	DESCRIPTION
0	No median.
1	Open median (with curb ≥ 250 mm and/or under non-mountable barrier).
2	Closed median (no barrier or curb < 250 mm).
3	Closed median with non-mountable barriers.

Location: Inventory Tab - Design Window (Screen 2 of 5)

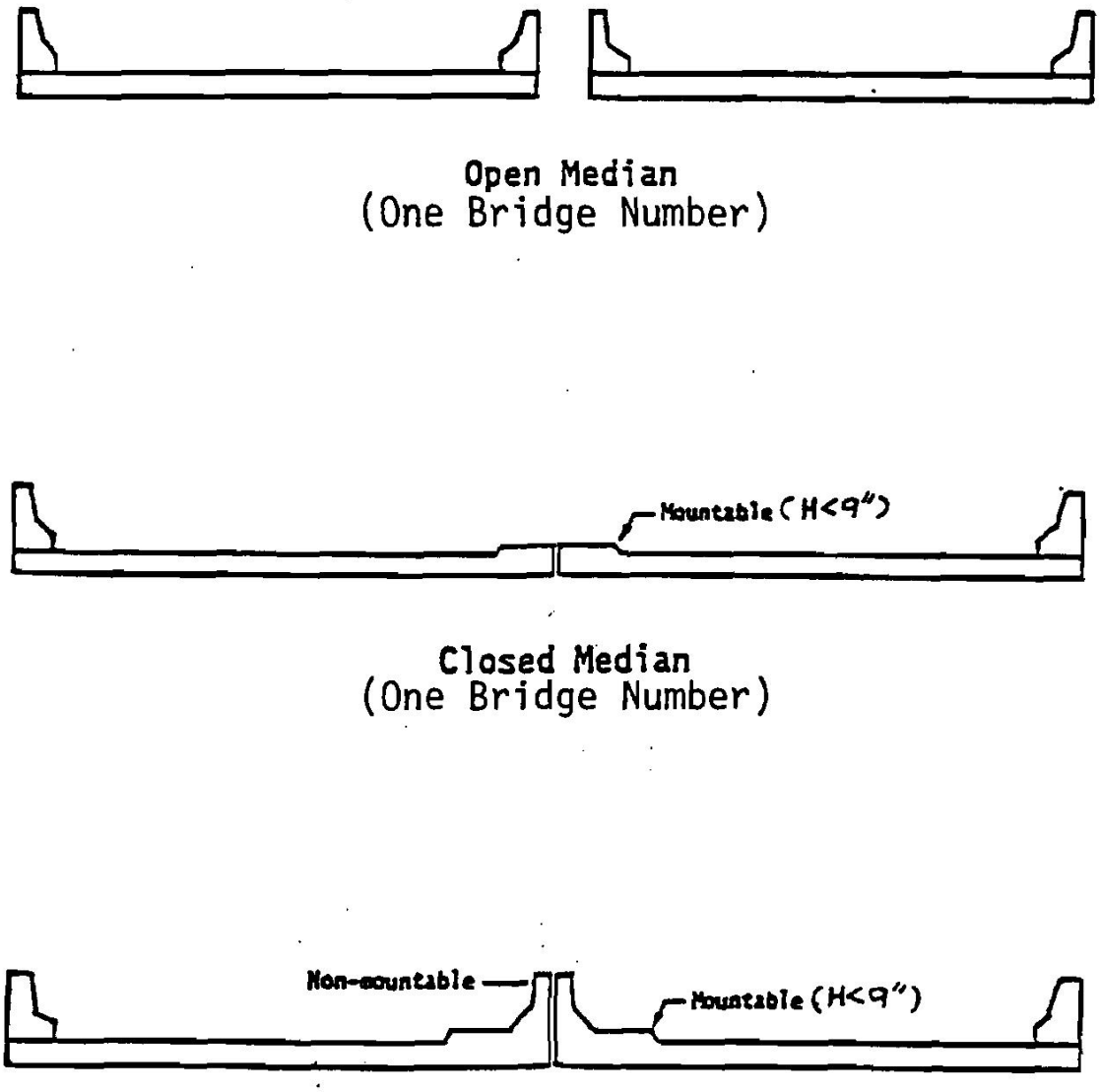
Open Median
(One Bridge Number)
Mountable (H<9")
Closed Median
(One Bridge Number)
Non-mountable
Mountable (H<9")

Figure 33-1

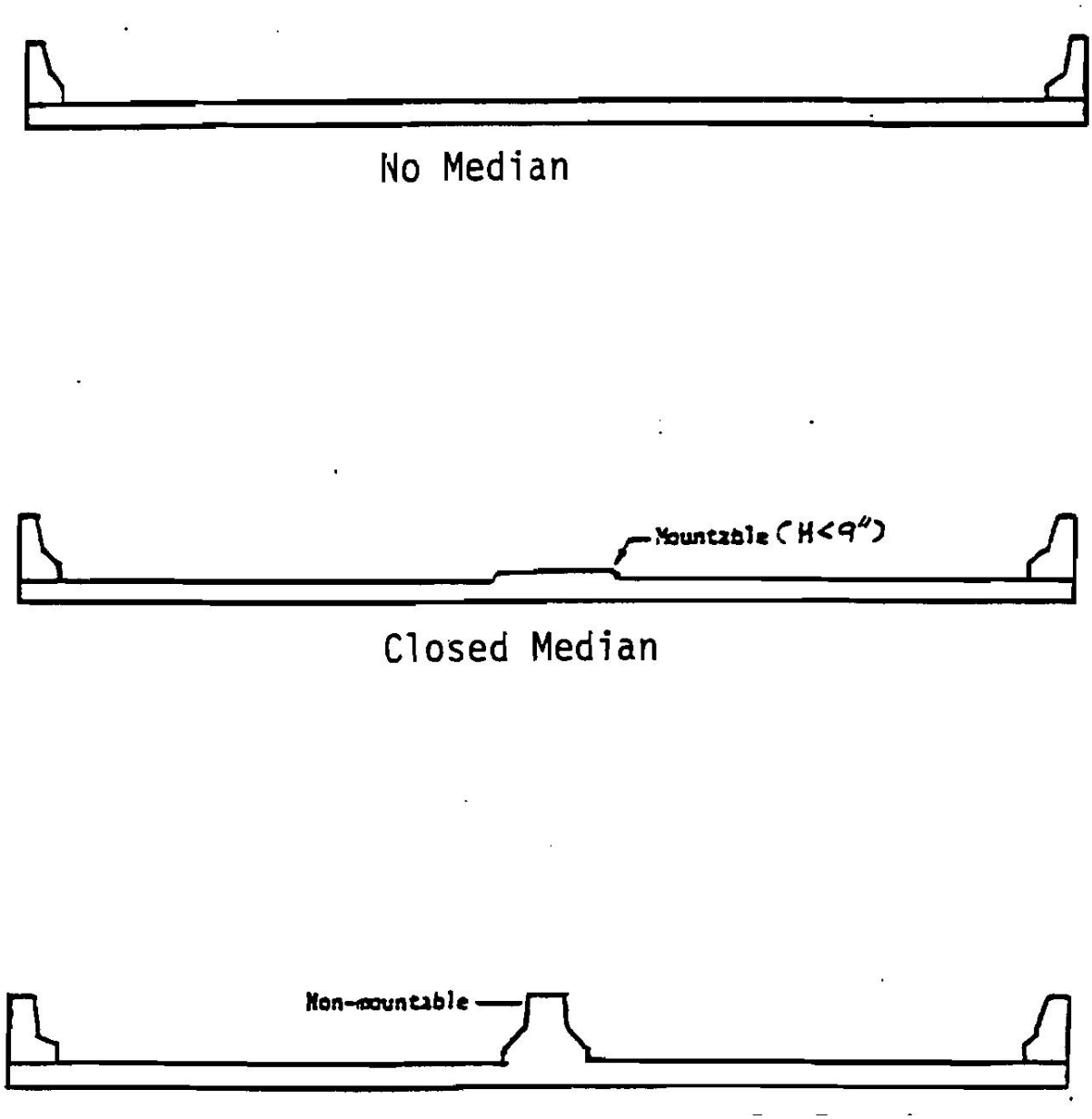

Figure 33-2

SKEW (34)

Table: Bridge Field Name: skew

The skew angle is the angle between the centerline of a pier and a line normal to the roadway centerline (see Figure 34-1). The skew angle may be taken directly from the plans; however, if no plans are available, the angle is to be field measured.

Record the skew angle to the nearest degree. If the skew angle is 0º, it should be so coded. When the structure is on a curve or if the skew varies slightly, record the average skew. For a major variation in skews of substructure units code “99". A 2 digit number should be coded.

EXCLUSIVE CODES: 00 through 90 or 99.

DATA REFERENCES: Bridge Plans and Field Measurements.

EXAMPLES:		CODE
Skew angle	0º	00
	10º	10
	8º	08
	29º	29

Location: Inventory Tab - Design Window (Screen 2 of 5)

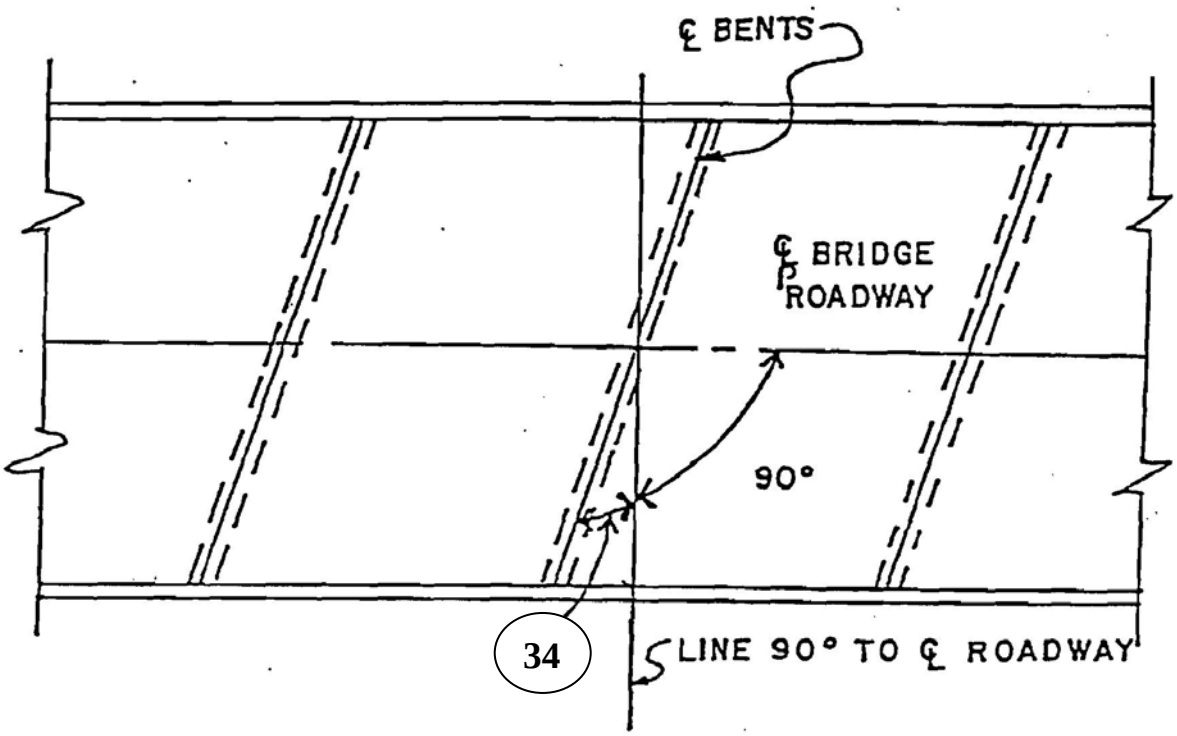

Figure 34-1

STRUCTURE FLARED (35)

Table: Bridge Field Name: strflared

Coding of this item indicates whether or not the width of the structure varies (see Figure 35-1). Structure may flare due to ramps converging or diverging from the through lanes on the structure. Minor flares at the ends of the structure should be ignored.

EXCLUSIVE CODES	DESCRIPTION
Y	Yes, Structure Flared
N	No, Structure Not Flared

DATA REFERENCES: Bridge Plans and Field Observations.

Location: Inventory Tab – Design Window (Screen 2 of 5)

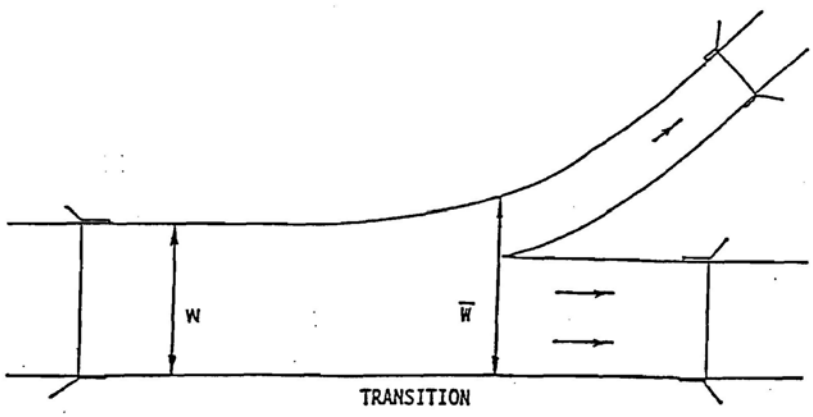

Figure 35-1

TRAFFIC SAFETY FEATURES (36)

Bridge inspection shall include the recording of information on the following traffic safety features so that the evaluation of their adequacy can be made. The data collected shall apply only to the route on the bridge. Collision damage or deterioration of the elements is not considered when coding this item. This item is divided into four segments.

SEGMENT	DESCRIPTION	LENGTH	TABLE	FIELD NAME
A	Bridge railings	1 position	Inspevnt	railrating
B	Transitions	1 position	Inspevnt	transratin
C	Approach guardrail	1 position	Inspevnt	arailratin
D	Approach guardrail ends	1 position	Inspevnt	aendrating

SEGMENT A - BRIDGE RAILING

Coding of this item indicates that current acceptability of the bridge railing. Some factors that affect the proper functioning of bridge railing are height, material, strength and geometric features. Railings must be capable of smoothly redirecting an impacting vehicle. Bridge railings should be evaluated using the current AASHTO Standard Specifications for Highway Bridges, which calls for railings to meet specific geometric criteria and to resist specified static loads without exceeding the allowable stresses in their elements. Bridge railing should be crash tested per FHWA policy. Railings that meet these criteria and loading conditions are considered acceptable. Other railings that have been successfully crash tested are considered acceptable even though they may not meet the static loading analysis and geometric requirements. Acceptable guidelines for bridge railing design and testing are also found in AASHTO Guide Specifications for Bridge Railings 1989. Additional guidance for testing is found in National Cooperative Highway Research Program - Report 350 Recommended Procedures for the Safety Performance Evaluation of Highway Features 1993.

SEGMENT B - TRANSITIONS

The coding of this item indicates the current acceptability of the transitions. The transition from approach rail to bridge railing requires that the approach rail be firmly attached to the bridge railing. It also requires that the approach railing be gradually stiffened as it comes closer to the bridge railing. The ends of curbs and safety walks need to be gradually tapered out or shielded.

DATA REFERENCES:

Bridge Plans and State of Florida Department of Transportation, Roadway and Traffic Design Standards - Guardrail - Standard Index 400.

SEGMENT C - APPROACH GUARDRAIL

Coding of this item indicates the current acceptability of the approach guardrail. The structural adequacy and compatibility of approach guardrail with transition designs should be determined. Rarely does the need for a barrier stop at the end of a bridge. Thus, an approach guardrail with adequate length and structural qualities to shield motorists from the hazards at a bridge site needs to be installed. In addition to being capable of safely redirecting an impacting vehicle, the approach rail must also facilitate a transition to the bridge railing that will not cause snagging or pocketing of an impacting vehicle. (Coding for this segment should be based on the structural adequacy and geometry of the guardrail - the evaluation of the transition is done in Segment B and should not impact the evaluation of Segment C.) Acceptable guardrail design suggestions are contained in the AASHTO Roadside Design Guide.

DATA REFERENCES:

Bridge Plans and State of Florida Department of Transportation, Roadway and Traffic Design Standards, Standard Index Sheets 400.

SEGMENT D - APPROACH RAIL ENDS

Coding of this item indicates the current acceptability of the approach rail ends. As with guardrail ends in general, the ends of approach rails to bridges should be flared, made breakaway or shielded. Design treatment of guardrail ends is given in the AASHTO Roadside Design Guide.

Currently acceptable standards should take into account traffic volume and speed, types of vehicles in the traffic stream, height of bridge, and under bridge conditions and activities. Thus, currently acceptable standards for a "farm to market" bridge approach rail ends should usually differ from that for an interstate bridge.

DATA REFERENCES:

Bridge Plans and State of Florida Department of Transportation, Roadway and Traffic Design Standards, Standard Index Sheets 400.

The reporting of these features shall be as follows:

EXCLUSIVE CODES	DESCRIPTION
1	MEETS STANDARDS - Inspected feature meets currently acceptable standards*.
0	SUBSTANDARD - Inspected feature does not meet currently acceptable standards, or a safety feature is required and none is provided*.
N	NOT APPLICABLE - Not Applicable or a safety feature is not required.

* For structures on the NHS, national standards are set by regulation. For those not on the NHS, it shall be the responsibility of the highway agency (state, county, local or federal), to set standards.

EXAMPLES: Interpretation	CODE
All features meet currently acceptable standards except transitions.	1011
No traffic on bridge, i.e., pedestrian bridge over highway or railroad bridge over highway	NNNN

Location: Appraisal Tab – Other Ratings Window (Screen 1 of 2)

HISTORICAL SIGNIFICANCE (37)

Table: Bridge Field Name: histsign

The historical significance of a bridge involves a variety of characteristics:

1. The bridge may be a particularly unique example of the history of engineering.
2. The crossing itself might be significant.
3. The bridge might be associated with a historical property or area.
4. Historical significance could be derived from the fact that the bridge was associated with significant events or circumstances.

EXCLUSIVE CODES	DESCRIPTION
1	Bridge is on the National Register of Historic Places.
2	Bridge is eligible for the National Register of Historic Places.
3	Bridge is possibly eligible for the National Register of Historic Places (Requires further investigation before determination can be made.), or bridge is on a state or local historic register.
4	Historical significance is undetermined at this time.
5	Bridge is not eligible for the National Register of Historic Places.

Until a final review and determination of historical significance of all bridges by the Environmental Management Office, the general coding guide of Item 37 is as follows:

Bridge built before 1940, coded 3
Bridge Built between 1940 and 1945, coded 4
Bridge built after 1945, coded 5

EXCLUSIVE CODES: 1 through 5.

DATA REFERENCES: FDOT Environmental Management Office.

Location: Inventory Tab – Classification Window (Screen 5 of 5)

NAVIGATION CONTROL (38)

Table Name: Bridge Field Name: navcntrol

Coding of this item signifies whether or not navigation control exists. A bridge has navigation control if it is listed in one of the data references below, and/or an approved permit for its construction has been issued by the U.S. Coast Guard or the Army Corps of Engineers.

EXCLUSIVE CODES	DESCRIPTIONS

N	NOT APPLICABLE - Not Applicable, No waterway.
0	PERMIT NOT REQUIRED - No navigation control on waterway (bridge permit not required.)
1	PERMIT REQUIRED - Navigation control on waterway (bridge permit required.)

DATA REFERENCES:

1. Department of Transportation, Coast Guard Bridges Over Navigable Waters of the United States - Part 1, Atlantic Coast and Gulf of Mexico.

2. Department of Transportation, Coast Guard Bridges Over Navigable Waters of the United States - Part 2, Gulf of Mexico and Mississippi River System.

   To obtain a copy of these pamphlets, write to Commander (OAN) Seventh Coast Guard District, 51 S W. First Avenue, Miami, Florida 33130.

Location: Appraisal Tab – Other Ratings Window (Screen 1 of 2)

NAVIGATIONAL VERTICAL CLEARANCE (39)

Table Name: Bridge Field Name: navvc

If Item 38-Navigation Control has been coded “1", record in meters the minimum vertical clearance imposed at the site as measured above a datum that is specified on a navigation permit issued by a control agency. The measurement shall be coded as a 4 digit number truncated to the nearest tenth of a foot. This measurement will show the clearance that is allowable for navigational purposes.

In the case of a swing or bascule bridge, the vertical clearance shall be measured with the bridge in the closed position (i.e., open to vehicular traffic). The vertical clearance of a vertical lift bridge shall be measured with the bridge in the raised or open position. (See Figure 39-1).

EXCLUSIVE CODE: 000.0 through 999.9.

DATA REFERENCES: Bridge Plans or Field Measurements.

EXAMPLES:		CODE
Measured Vertical Clearance:	50.00 feet	050.0
	20.65 feet	020.6
	24.28 feet	024.2

Location: Appraisal Tab – Other Ratings Window (Screen 1 of 2)

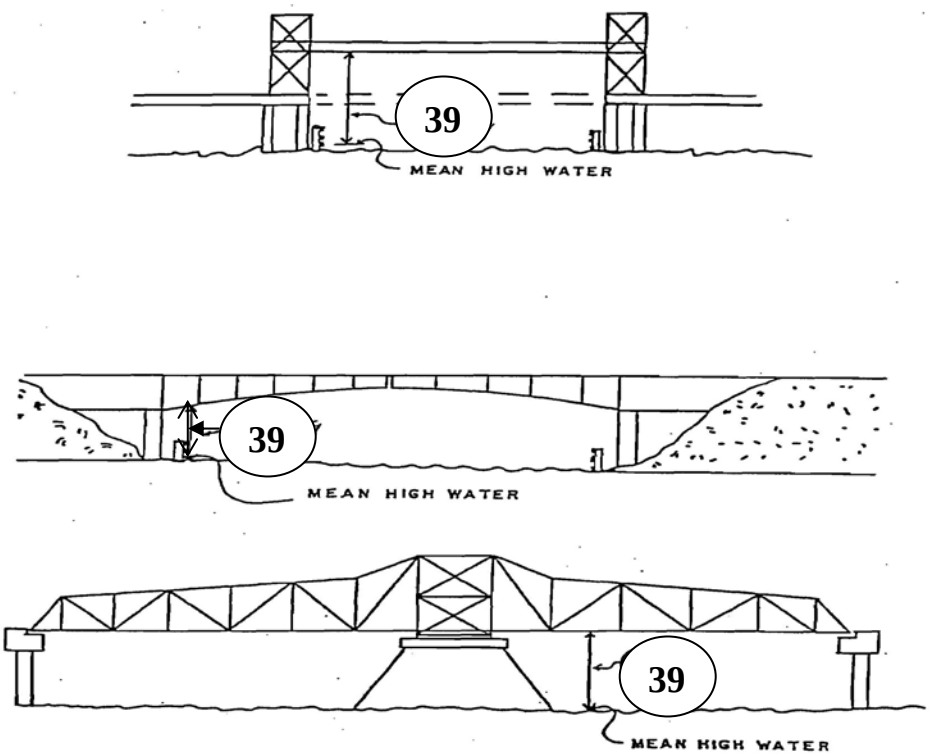

Figure 39-1

NAVIGATIONAL HORIZONTAL CLEARANCE (40)

Table Name: Inspevnt Field Name: navhc

If Item 38-Navigation Control has been coded “1", record for this item the minimum horizontal clearance in feet. This measurement should be that shown on the navigation permit and may be less than the structure geometry allows.

If a navigation permit is required but not available, use the minimum horizontal clearance between fenders, if any, or the clear distance between piers or bents. Code the clearance as a 5 digit number truncated to the tenth of a foot. Code “0000.0" if Item E1-Navigation Control is coded “0" or “N”. (See Figure 40-1).

EXCLUSIVE CODES: 0000.0 through 9999.9.

DATA REFERENCES: Bridge Plans and Field Measurements.

EXAMPLES:		CODE
Horizontal Clearance:	53.57 feet	0053.5
	95.00 feet	0095.0
	202.09 feet	0202.0

Location: Appraisal Tab – Other Ratings Window (Screen 1 of 2)

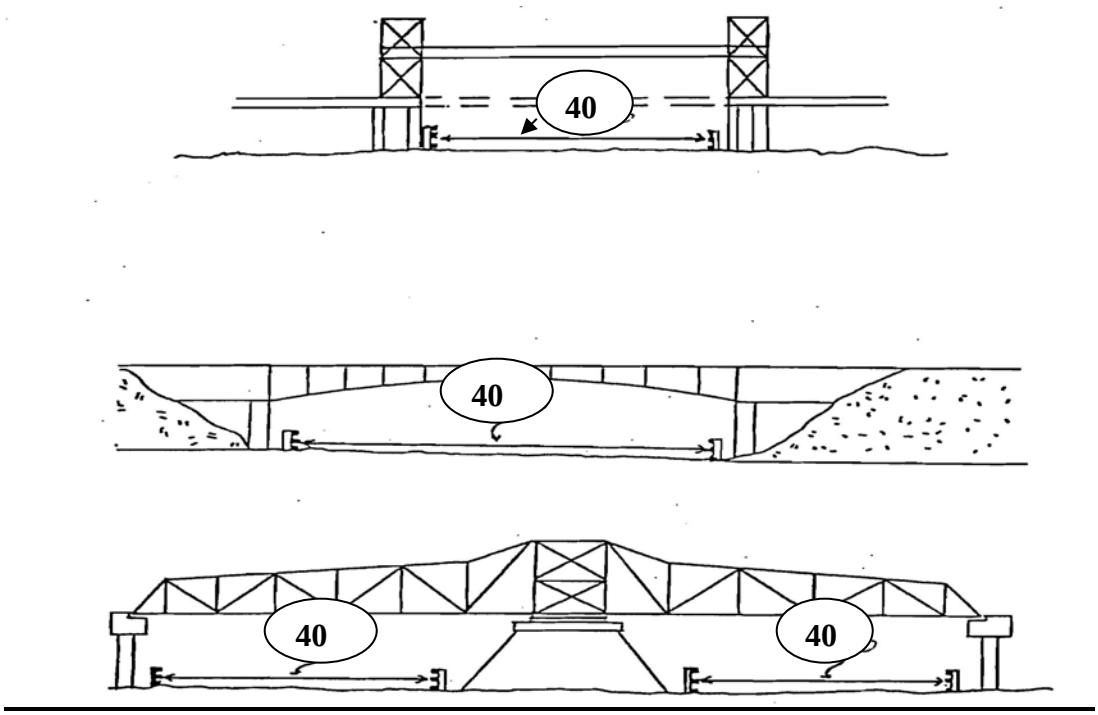

40 = Navigational Horizontal Clearance

Figure 40-1

OPEN/POSTED/CLOSED (41)

Table Name: Inspevnt Field Name: oppostcl

This item provides information about the actual operational status of a structure. The field review could show that a structure is posted, but Item 70-Bridge Posting may indicate that posting is not required. This is possible and acceptable coding since Item 41 is based on the operating stress level and the governing agency's posting procedures may specify posting at some stress level less than the operating rating. One of the following codes shall be used:

EXCLUSIVE CODES	DESCRIPTION
A	OPEN, NO RESTRICTION - open, no restriction required.
B	POSTING RECOMMENDED - Open, posting recommended but not legally implemented (all signs not in place).
C	OPEN, STR ANAL NOT COMP - Open, structural analysis is not yet completed.
D	OPEN, TEMP SHORED - Open, would be posted or closed except for temporary shoring, etc., to allow for unrestricted traffic.

E	OPEN, TEMP STRUC - Open, temporary structure in place to carry legal loads while original structure is closed and awaiting replacement or rehabilitation. **<u>IMPORTANT NOTE:</u> See special coding requirements for Items 64 and 66 when using E.**
F	PROPOSED BRIDGE - Bridge is proposed or under construction (NOTE: See Appendix A and E for required NBI Items)
G	NEW - NOT YET OPEN - New structure not yet open to traffic.
K	CLOSED TO ALL TRAFFIC - Bridge closed to all traffic. **<u>IMPORTANT NOTE:</u> When closing a bridge, the inspection needs to be an "NBI Inspection Event" in order to identify as a closed bridge on the annual NBI data submittal to FHWA.**
P	POSTED FOR LOAD - (may include other restrictions).
R	POSTED FOR NON- LOAD - Posted for other restriction (speed, # vehicles on bridge, load restriction when none is required, etc.).
Z	DELETED BRIDGE - Structure deleted from active list (assign to central office district)

Structures that are closed to highway traffic and are not planned to be reopened to traffic should be assigned to the central office district and coded "Z". If the structure is closed and is awaiting replacement, Item 41 should be coded with "K".

Location: Appraisal Tab – Other Ratings Window Appraisal (Screen 1 of 2)

<u>TYPE SERVICE (42)</u>

The type of service on the bridge and under the bridge is indicated by a 2 digit code composed of two segments. This is a required field for over-lane sign structures, high mast light poles and traffic signal mast arms.

<u>SEGMENT A</u> - TYPE OF SERVICE ON BRIDGE (First Position)

Table: Bridge Field Name: servtypon

The first digit indicates that type of service "on" the bridge and shall be coded using one of the following codes. An interchange exists only when one or more on or off ramps exist at a grade separation of two or more highways.

EXCLUSIVE CODE	DESCRIPTION
1	Highway
*2	Railroad
*3	Pedestrian-Bicycle
4	Highway-railroad

5	Highway-pedestrian
6	Overpass structure at an interchange or second level of a multi-level interchange
7	Third level (Interchange)
8	Fourth level (Interchange)
*9	Building or plaza
0	Other
p	High Mast Light Pole
s	Overhead Sign
m	Traffic Signal Mast Arm
w	Free standing Wall (not attached to a bridge)

* Valid only when Segment A of Item 5-Inventory Route is coded 2.

EXCLUSIVE CODES: 0 through 9.

DATA REFERENCES: Bridge Plans.

SEGMENT B - TYPE OF SERVICE UNDER BRIDGE (Second Position)

Table: Bridge Field Name: servtypund

The second digit indicates the type of service "under" the bridge and shall be coded using one of the following codes:

EXCLUSIVE CODES	DESCRIPTION
1	Highway, With or Without Pedestrian
2	Railroad
3	Pedestrian-Bicycle
4	Highway-railroad
5	Waterway
6	Highway-waterway
7	Railroad-waterway
8	Highway-waterway-railroad
9	Relief for waterway
0	Other

A relief bridge is defined as a structure that is built on the flood plain of a main channel along the approach alignment to the main bridge. The function of this structure is to relieve flood waters that might otherwise damage or flow over the roadway of the main bridge.

EXCLUSIVE CODES: 0 through 9.
DATA REFERENCES: Bridge Plans.

EXAMPLES:	CODE
Highway over a river	15
Highway over building	10

EDIT PROGRAM ERROR CHECK:

Each position must be coded 0 through 9.

If Item 29-Average Daily Traffic is coded "000001", then the first position of Item 42 must not be coded 1, 4, 5, 6, 7 or 8.

If Item 61-Channel and Channel Protection is numeric, the second position of Item 42 must be coded 5, 6, 7, 8, 9 or 0.

If Item 69-Underclearances, Vertical and Horizontal is numeric, the second position of Item 42 must be coded 1, 2, 4, 6, 7, 8 or 0.

If Item 113-Waterway Adequacy is numeric, the second position of Item 42 must be coded 5, 6, 7, 8, 9 or 0.

If Segment A of Item 28-Lanes On and Under the Structure is greater than 00, then the first position of Item 42 must be coded 1, 4, 5, 6, 7, 8 or 0.

If Segment B of Item 28-Lanes On and Under the Structure is greater than 00, then the second position of Item 42 must be coded 1, 4, 6, 7, 8 or 0.

Location: Inventory Tab – ID/Admin Window (Screen 1 of 5)

STRUCTURE TYPE, MAIN (43)

This item is used to code the type of structure for the main span(s). The total quantity of the superstructure features in main spans is also recorded in this item. This is a required field for over-lane sign structures, high mast light poles and traffic signal mast arms.

The main span is usually the longest span in the bridge that spans a main channel or grade separation. When the structure is of one type construction, code all spans as main spans and code Item 44-Structure Type, Approach Spans, and Item 46-Number of Approach Spans, as all zeroes.

The coding is divided into two segments for entering data.

SEGMENT A - KIND OF MATERIAL AND/OR DESIGN (First Position)

Table: Bridge Field Name: materialmain

The first segment indicates the kind of material and/or design and shall be coded using one of the following codes:

EXCLUSIVE CODES	DESCRIPTION
1	Concrete
2	Concrete continuous
3	Steel
4	Steel continuous
5	Prestressed concrete*
6	Prestressed concrete continuous*
7	Wood or Timber
8	Masonry
9	Aluminum, Wrought Iron, or Cast Iron
0	Other

* Post-tensioned concrete should be coded as prestressed concrete.

EXCLUSIVE CODES: 0 through 9.

SEGMENT B - TYPE OF DESIGN AND/OR CONSTRUCTION (Second through Third Positions)

Table: Bridge Field Name: designmain

The second segment indicates the predominant (most frequent) type of design and/or type of construction and shall be coded using one of the following codes:

EXCLUSIVE CODES	DESCRIPTION
01	Slab
02	Multi-beam or Multi-girder
03	Girder-Floorbeam (GF) or Girder-Floorbeam-Stringer
04	Tee Beam, or Double Tee Beam
05	Box Beam or Girders - Multiple*
06	Box Beam or Girders - Single or spread*
07	Frame (except frame culverts)
08	Orthotropic
09	Truss - Deck
10	Truss - Thru or Pony
11	Arch - Deck
12	Arch - Thru
13	Suspension
14	Cable Stayed Girder
15	Movable - Lift

16	Movable - Bascule
17	Movable - Swing
18	Tunnel
19	Culvert (includes frame culverts)
21	Segmental Box Girder
22	Channel Beam
88	Sign-Monotube-Span **
89	Sign-Monotube-Cantilever **
91	Cantilever Sign Structure **
92	Span Sign Structure **
93	Butterfly Sign Structure **
94	Cable Sign Structure (not part of a structure)
96	High Mast Light Standard (not part of a structure)
97	Traffic Signal Mast Arm
98	Earth Retaining Wall (not part of a structure)
99	Sea Retaining Wall (not part of a structure)
00	Other

***** Multiple = Box Beams or Girders in contact.
Spread = Box Beams or Girders are spaced apart from each other.

** If a sign structure is above the bridge deck and supported by the bridge, it shall be given a structure number. If it is attached to the bridge rail and /or the fascia girder, it shall not be given a structure number.

EXCLUSIVE CODES: 00 through 22.

EXAMPLES ON SEGMENT A AND SEGMENT B:	CODE
Continuous steel beams on timber bents	402
Wood or Timber through truss	710
Wood or Timber beams, concrete deck	702
Concrete slab on steel beams	302
Prestress channel	522
Simple span concrete slab	101
Steel bascule	316
Steel suspension	313
Tunnel in rock	018
Prestress concrete continuous segmental box girders (Multiple opening)	621
Prestress concrete continuous cable stayed girder	614
Prestress concrete sonovoid slab unit	501
Prestress concrete continuous (post-tensioned) bulb-Tee Girders	602
Prestress concrete AASHTO Girders with continuous concrete deck slab	502

Location: Inventory Tab - Design Window (Screen 2 of 5)

EXAMPLES:

05 – Adjacent Box Beam/Girder (cross section)

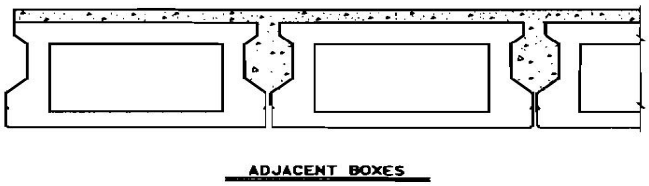

06 – Spread Box Beam/Girder (cross section)

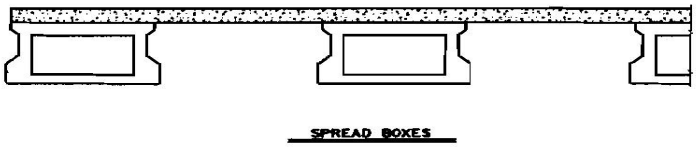

09 – Truss: Deck (profile and section views)

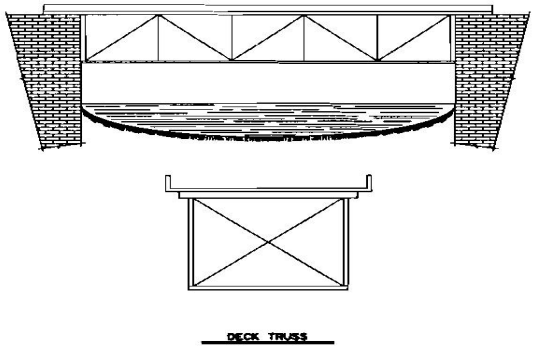

10 – Truss: Thru/Pony (profile and section views)

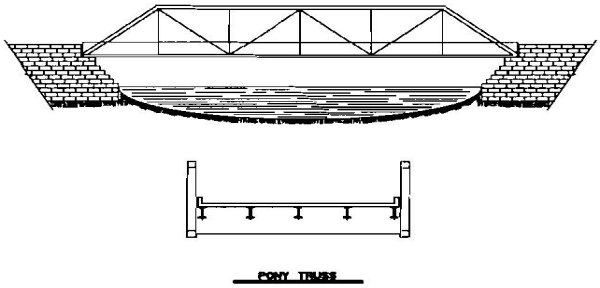

Figure 43-1

STRUCTURE TYPE, APPROACH SPANS (44)

This item will be used to identify the approach structure type, where the approach span material is different from the main span(s). The total quantity of the superstructure features in approach spans is also recorded in this item. All spans not defined as main spans in Item 43 - Structure

Type, Main, are classified as approach spans.

If the structure type is the same as for Item 43, or if there are no approach spans, code Item 44 as all zeroes.

The coding of this item is divided into two segments for entering the data.

SEGMENT A - KIND OF MATERIAL AND/OR DESIGN (First Position)
Table: Bridge Field Name: materialappr

The first segment indicates the kind of material and/or design and shall be coded using one of the following codes:

EXCLUSIVE CODES	DESCRIPTION
1	Concrete
2	Concrete continuous
3	Steel
4	Steel continuous
5	Prestressed concrete*
6	Prestressed concrete continuous*
7	Wood or Timber
8	Masonry
9	Aluminum, Wrought Iron, or Cast Iron
0	Other

* Post-tensioned concrete should be coded as prestressed concrete.

When the kind of material is varied, code the most predominate (most frequent) material.

EXCLUSIVE CODES: 0 through 9.

SEGMENT B - TYPE OF DESIGN AND/OR CONSTRUCTION (Second through Third Positions)

Table: Bridge Field Name: designappr

The second segment indicates the predominant (most frequent) type of design and/or type of construction and shall be coded using one of the following codes:

EXCLUSIVE CODES	DESCRIPTION
01	Slab
02	Multi-beam or Multi-Girder
03	Girder-Floor beam (GF) or Girder-Floor beam-Stringer (GFS) System
04	Tee Beam
05	Box Beam or Girders - Multiple*
06	Box Beam or Girders - Single or spread
07	Frame (except frame culverts)
08	Orthotropic
09	Truss - Deck
10	Truss - Thru or Pony
11	Arch - Deck
12	Arch - Thru
13	Suspension
14	Cable Stayed Girder
15	Movable - Lift
16	Movable - Bascule
17	Movable - Swing
18	Tunnel
19	Culvert (includes frame culverts)
20	Mixed types
21	Segmental Box Girder
22	Channel Beam
00	Other

* Multiple = Box Beams or Girders in contact.
Spread = Box Beams or Girders are spaced apart from each other.

When no one type of design and/or construction predominates, then this segment shall be coded "20".

EXCLUSIVE CODES: 00 through 22.

EXAMPLES ON SEGMENT A AND SEGMENT B:	CODE
Continuous steel beams on timber bents	402
Wood or Timber through truss	710
Wood or Timber beams, concrete deck	702
Concrete slab on steel beams	302
Prestress channel	522
Simple span concrete slab	101
Steel bascule	316
Steel suspension	313
Tunnel in rock	018

Prestress concrete continuous segmental box girders (Multiple opening)	621
Prestress concrete continuous cable stayed girder	614
Prestress concrete sonovoid slab unit	501
Prestress concrete continuous (post-tensioned) bulb-Tee girders	602
Prestress concrete AASHTO girders with continuous concrete deck slab	502

Location: Inventory Tab - Design Window (Screen 2 of 5)

NUMBER OF SPANS IN MAIN UNIT (45)

Table: Bridge Field Name: mainspans

Record the number and indicate with a 3 position code the number of major spans of a structure. This item will include:

1. All spans of a bridge with the same span design and type of construction.
2. The major spans of a sizeable bridge.
3. The spans of a bridge with different design or type of construction from that of approaching spans.
4. This includes all spans defined in Item B1 (43)-Structure Type, Main.

EXCLUSIVE CODES: 001 through 999.

EDIT PROGRAM ERROR CHECK:
Must be coded with leading zeroes. Must be coded numeric and greater than 0.

Location: Inventory Tab – Design Window (Screen 2 of 5)

NUMBER OF APPROACH SPANS (46)

Table: Bridge Field Name: appspans

This item is used to record the number of approach spans in the bridge. Approach spans are spans that are of a different design and/or construction than the main spans. If all spans of a bridge are the same type of construction or design, all positions will be filled with zeroes.

Location: Inventory Tab – Design Window (Screen 2 of 5)

INVENTORY ROUTE, TOTAL HORIZONTAL CLEARANCE (47)

Table: Roadway Field Name: hclrinv

The purpose of this item is to give the largest available clearance for the movement of wide loads. This is a required field for over-lane sign structures, high mast light poles and traffic signal mast arms. Total horizontal clearance for the inventory route identified in Item 5 should be measured and recorded (see Figure 47-1).

The clearance should be the available clearance measured between the restrictive features -- curbs, rails, walls, or other structural features limiting the roadway (surface and shoulders). The measurement should be recorded and coded to the nearest tenth of a foot. The value of this field may not exceed 327.7 feet (the equivalent of 99.9 meters). When the restriction is 100 meters or greater, code “999". This clearance has been identified in three ways; use the most applicable:

1. Roadway surface and shoulders.
2. Distance from face of pier (or rail around pier) to face of rail or toe of slope.
3. Include flush or mountable medians (Item 33-Bridge Median, coded 2), but not raised median (Item 33, coded 3). For a raised or non-mountable median, record the greater of the restricted widths in either direction, not both directions.
4. For over-lane sign structures code the smaller of distance between structure and guardrail or structure and shoulder edges.
5. For high mast light poles code 99.99.
6. For traffic signal mast arms code 0000.

EXCLUSIVE CODES: 000 through 999.

DATA REFERENCES: Bridge Plans and Field Measurements.

Location: Inventory Tab - Roads Window (Screen 3 of 5)

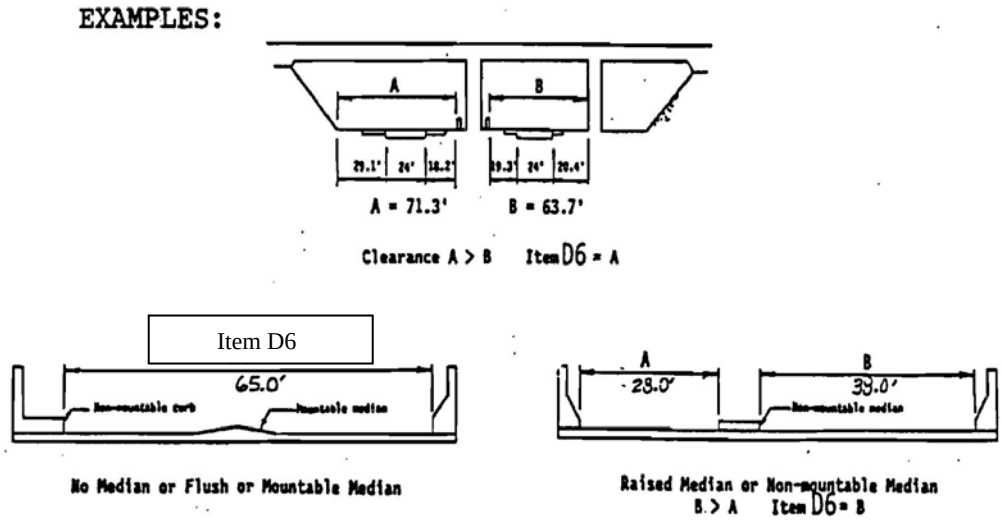
EXAMPLES:
A
B
A = 71.3'
B = 63.7'
Clearance A > B
Item D6 = A
Item D6
65.0'
No Median or Flush or Mountable Median
A
28.0'
B
39.0'
Raised Median or Non-mountable Median
B > A
Item D6 = B

Figure 47-1

LENGTH OF MAXIMUM SPAN (48)

Table: Bridge Field Name: maxspan

Code a 5 position number to the nearest one-tenth of a foot from center of joint to center of joint along the centerline of the bridge for simply supported structures. For continuous or cantilever structures, measure the maximum span length between centers of piers or bents (see Figure 48-1).

EXCLUSIVE CODES: 00001 through 99999.

DATA REFERENCES: Bridge Plans or Field Measurements.

EDIT PROGRAM ERROR CHECK:

Item 48 must not be greater than Item 49-Structure Length.

Location: Inventory Tab – Design Window (Screen 2 of 5)

SPECIAL NOTES:

Double Leaf Bascule Bridges - use the center to center of live load shoes along the centerline of the roadway.

Single Leaf Bascules – use the distance between the centerline of the live load shoe to the center of the bearing on the end of the bascule leaf along the centerline of the roadway.

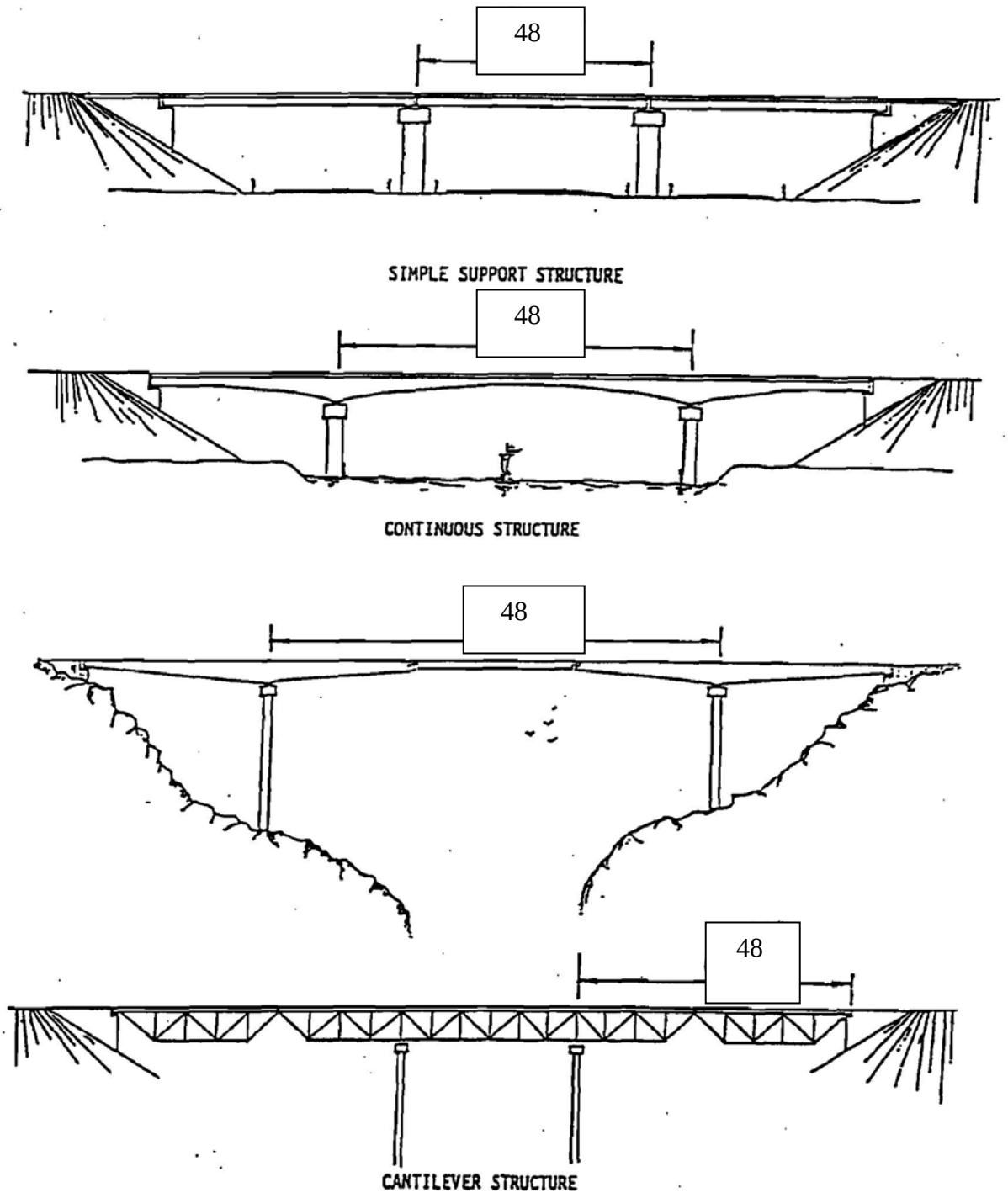

48 = Maximum Span Length

Figure 48-1

STRUCTURE LENGTH (49)

Table: Bridge Field Name: length

Code to the nearest one-tenth of a foot the length of the bridge. This should be the length of the roadway carried by the structure. The length should be measured along the roadway centerline between the backfaces of backwalls of two abutments or from paving notch to paving notch (see Figure 49-1).

Culverts, including single or multiple boxes or pipes, should be measured along the centerline of the roadway between inside faces of exterior walls. Multiple pipes or boxes will be measured from extreme ends when the clear distance between openings is less than half of the pipe diameter or box openings (see Figure 49-2).

For over-lane sign structures, high mast light poles and traffic signal mast arms code 0.000.

EXCLUSIVE CODES: 000061 through 999999.

DATA REFERENCES: Bridge Plans and Field Measurements.

Location: Inventory Tab – Design Window Identification (Screen 2 of 5)

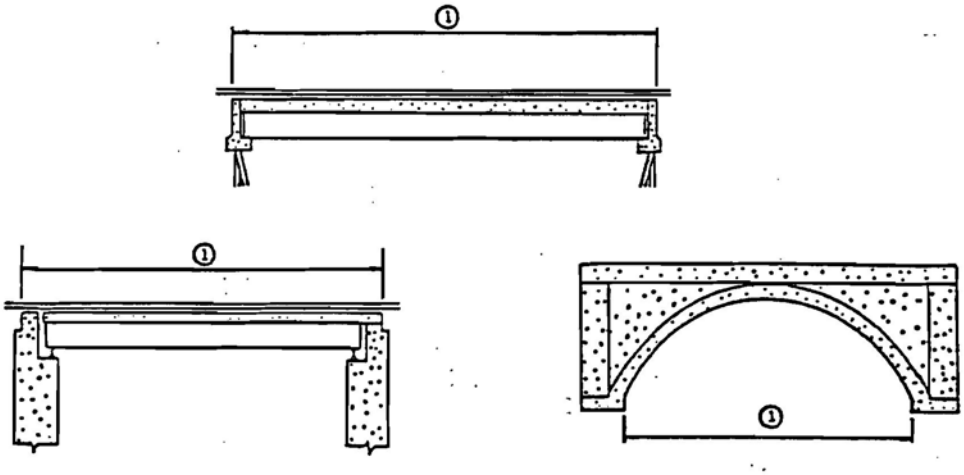

1 = Structure Length
Figure 49-1

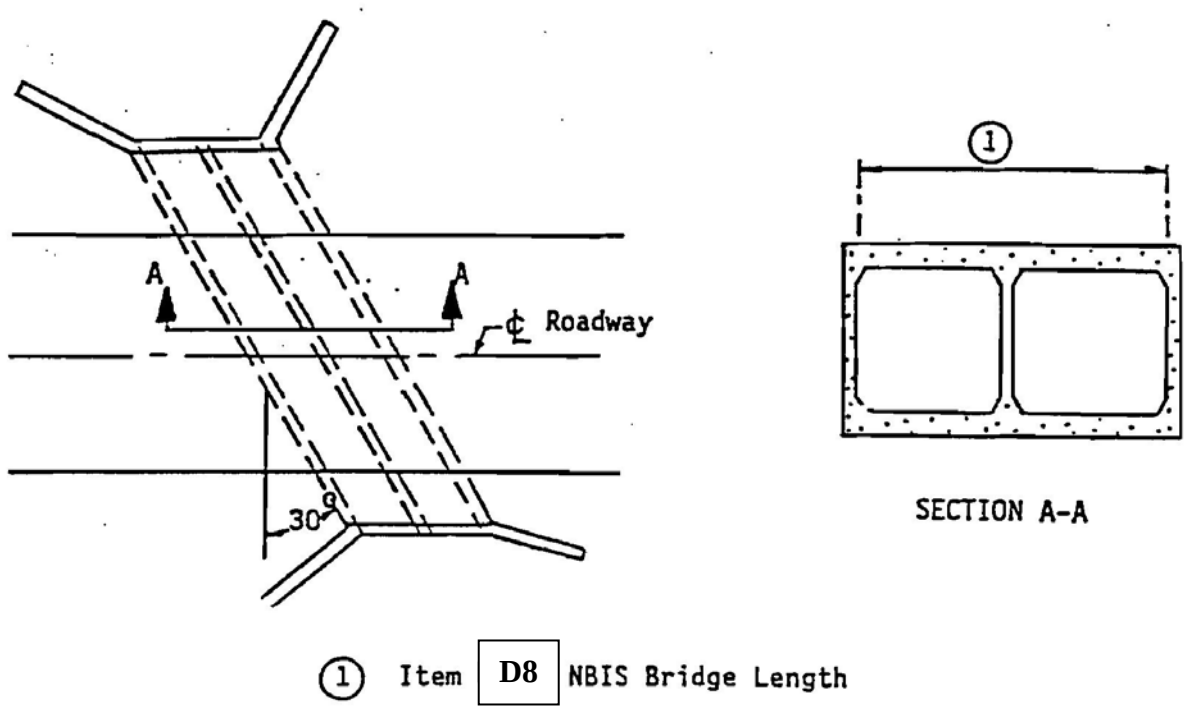

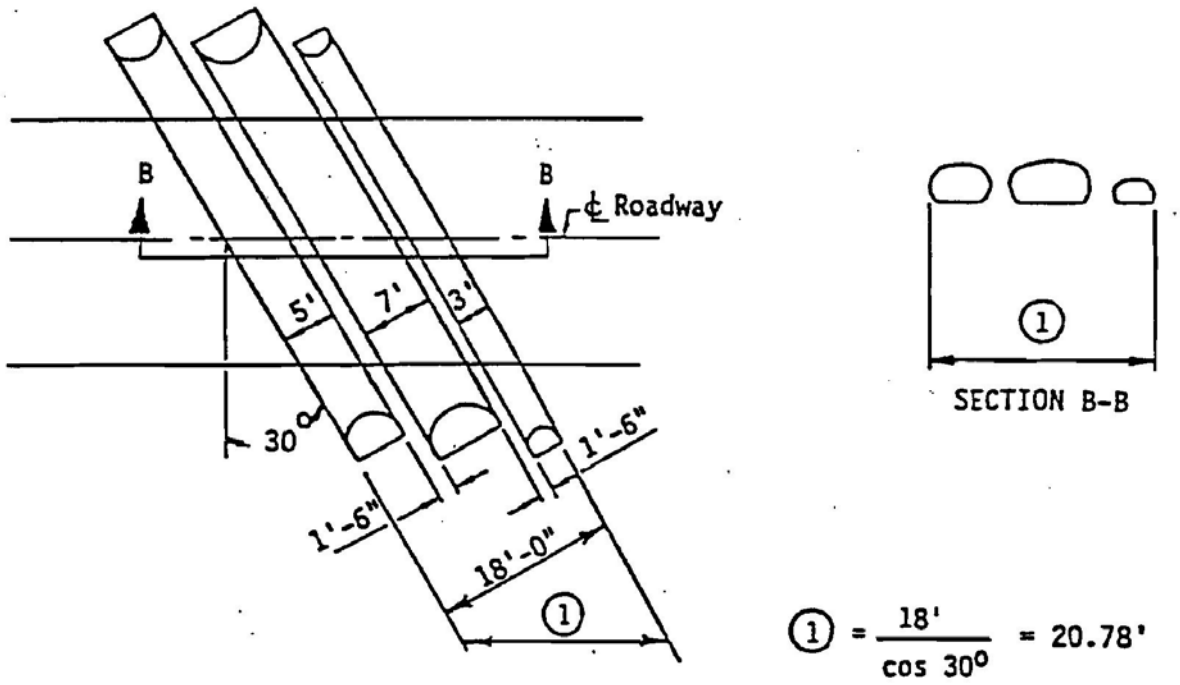

1 = Structure Length

Figure 49-2

CURB OR SIDEWALK WIDTHS (50)

Code two contiguous 3 digit segments to represent the widths of the left and right curbs or sidewalks to the nearest tenth of a meter (with assumed decimal points). "Left" and "Right" should be determined on the basis of direction of the inventory. Code all zeroes if the structure is a culvert under-fill.

SEGMENT A - LEFT CURB OR SIDEWALK WIDTH (First through Third Positions)

Table: Bridge Field Name: lftcurbsw

Code to the nearest tenth of a foot, in the direction of inventory, the left curb or sidewalk width. Code all zeroes where no sidewalk or curb exists (see Figures 50-1 and 50-2).

EXCLUSIVE CODES: 000 through 999.

DATA REFERENCES: Bridge Plans or Field Measurements.

SEGMENT B - RIGHT CURB OR SIDEWALK WIDTH (Fourth through Sixth Positions)

Table: Bridge Field Name: rtcurbsw

Code to the nearest tenth of a foot, in the direction of inventory, the right curb or sidewalk width. Code all zeroes where no sidewalk or curb exists (see Figures 50-1 and 50-2).

Location: Inventory Tab - Design Window (Screen 2 of 5)

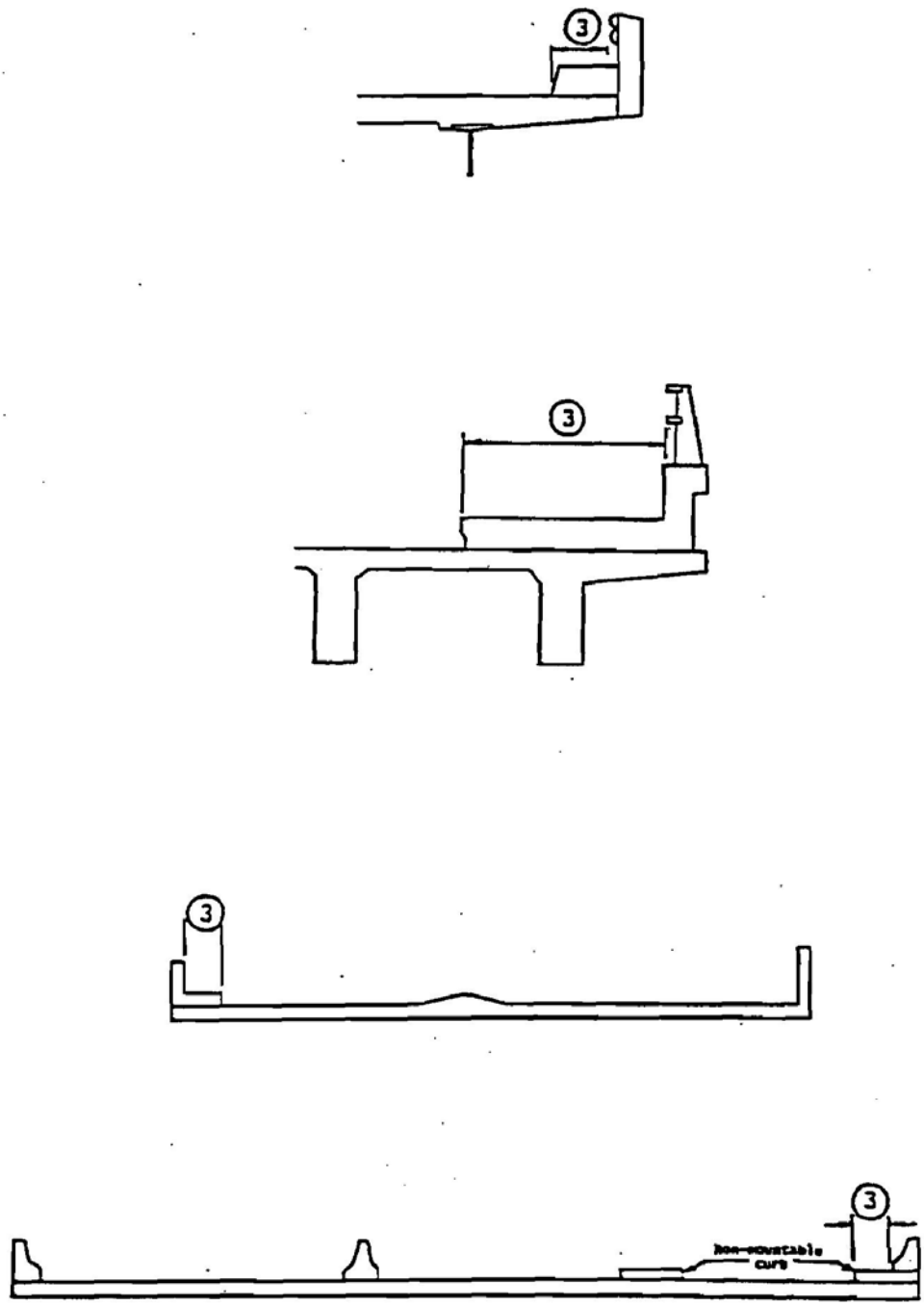

3 Item **50** Curb or Sidewalk Width

Figure 50-1

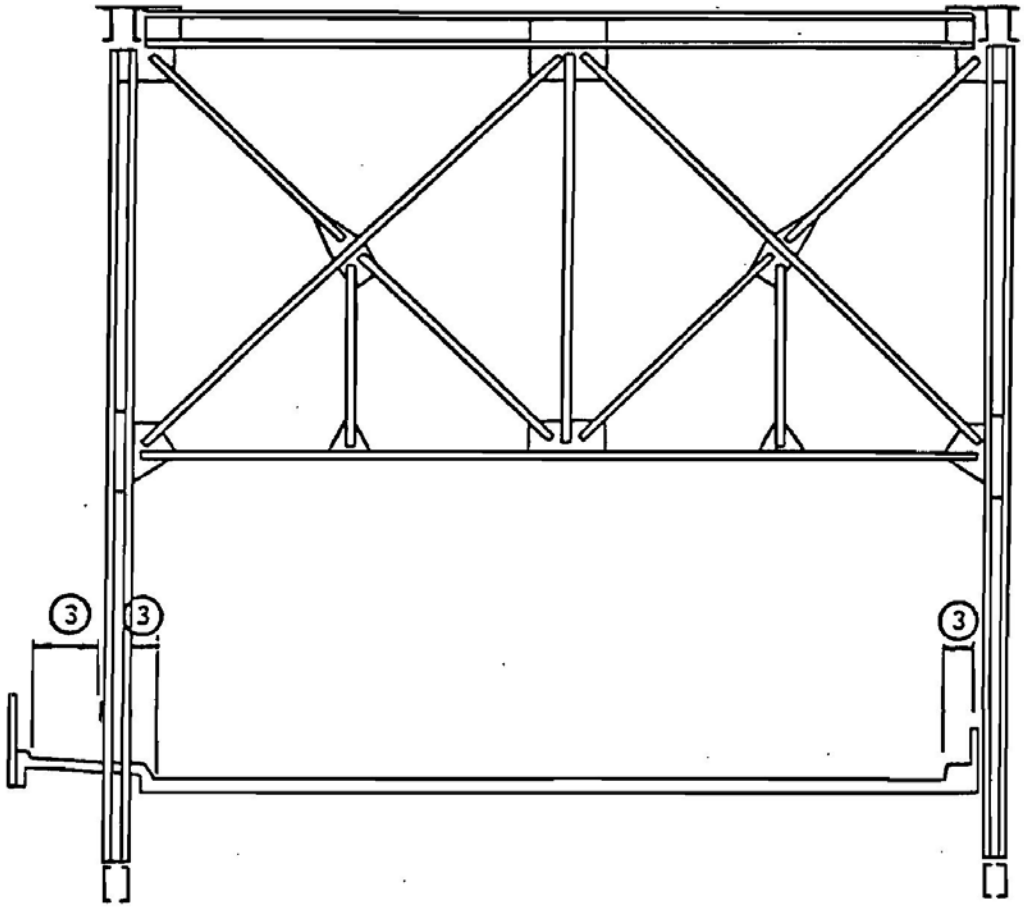

3 Item **50** Curb or Sidewalk Width

Figure 50-2

BRIDGE ROADWAY WIDTH, CURB-TO-CURB (51)

Table: Roadway Field Name: roadwidth

The information to be recorded is the most restrictive minimum distance between curbs or rails, in other words, the total available curb-to-curb bridge roadway width on the structure (see Figure 51-1). For structures with closed medians and usually for double-decked structures, coded data will be the sum of all distances of the roadways at the most restrictive section (bounded by non-mountable medians, barriers or curbs), on the structure. Raised or non-mountable medians, open medians, and barrier widths are to be excluded from the summation along with barrier-protected bicycle and equestrian lanes. The median is closed when the area between the two roadways at the structure is bridged-over and is capable of supporting traffic. The measurement should be exclusive of "flared" areas for ramps.

A 4 digit number should be used to represent the distance to the nearest tenth of a foot. The data recorded for this item must be compatible with other related route and bridge data (i.e., Items 28, 29 and 32 etc.)

Where traffic runs directly on the top slab (or wearing surface) of a culvert-type structure, e.g., an R/C box without fill, code the actual roadway width (curb-to-curb or rail-to-rail). This will also apply where the fill is minimal and head walls or parapets affect the flow of traffic.

Where the roadway is on fill carried across a structure and the headwalls or parapets do not affect the flow of traffic, code 0000. This is considered proper inasmuch as a filled section simply maintains the roadway cross-section.

This is a required field for over-lane sign structures, high mast light poles and traffic signal mast arms. For these structures code 0.0

Location: Inventory Tab – Roads Window (Screen 3 of 5)

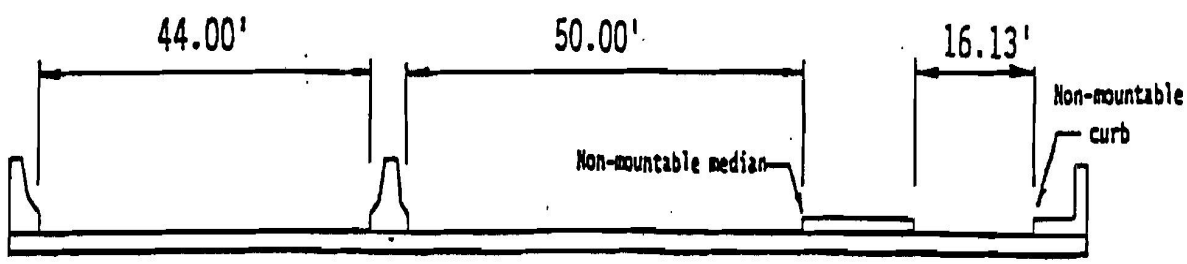

Bridge Roadway Width = 44' + 50' + 16.13' = 110.13'

Figure 51-1

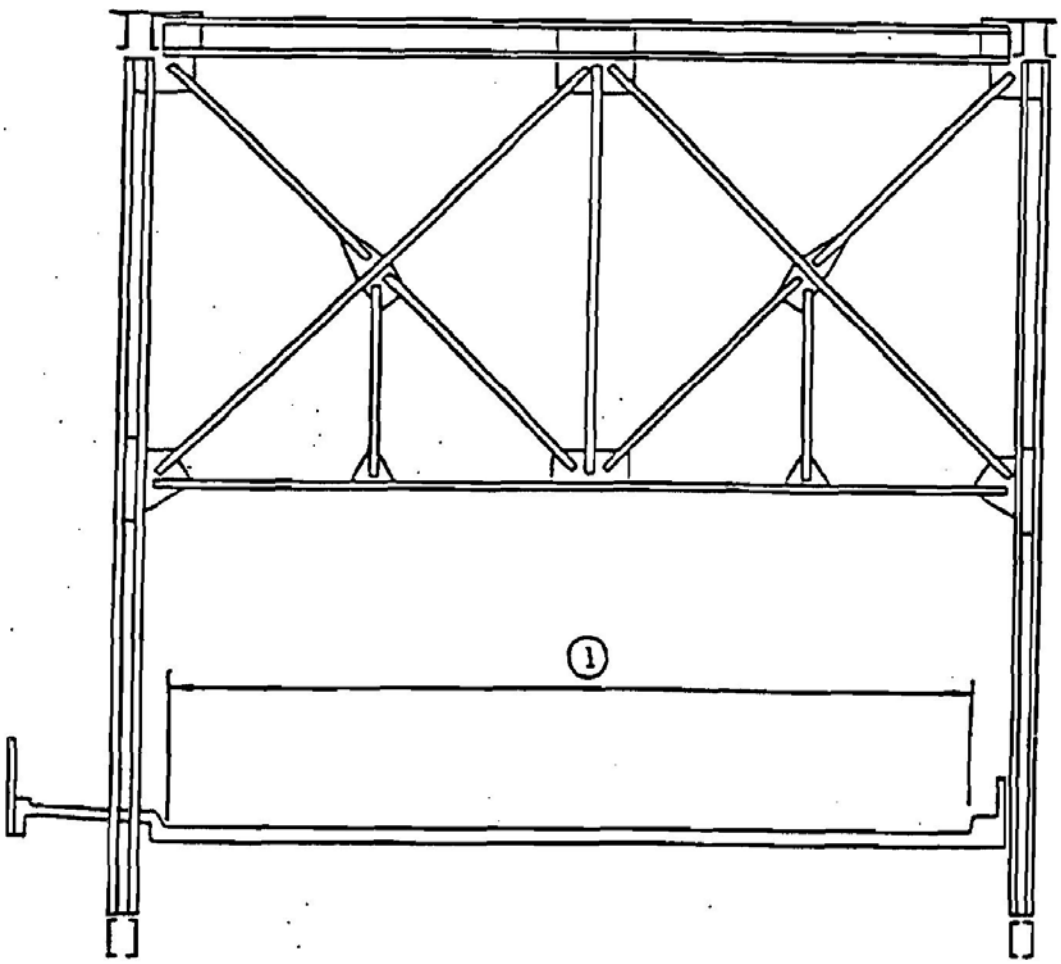

1 Item 51 Bridge Roadway Width, Curb-to-Curb

Figure 51-2

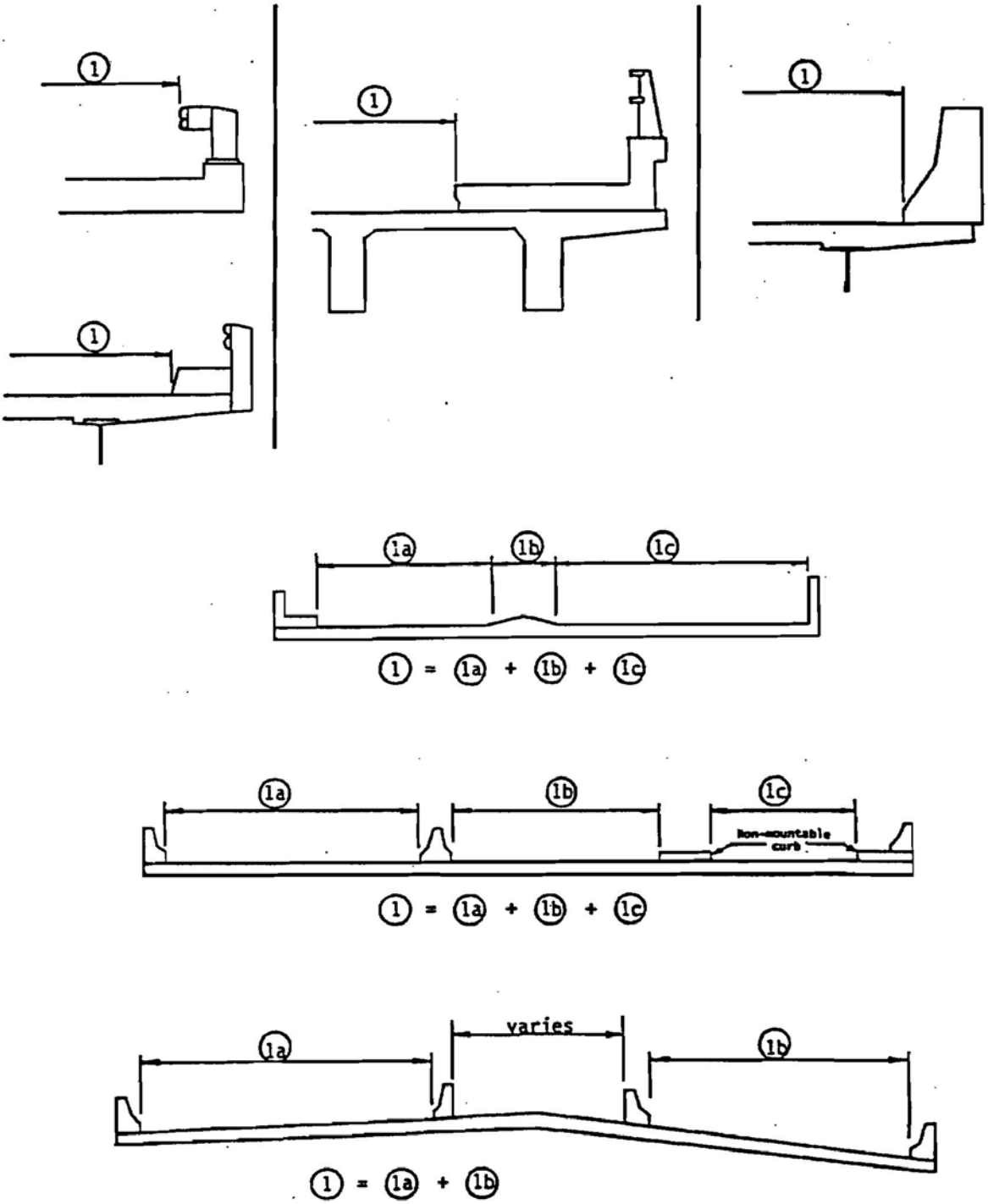

1 Item 51 Bridge Roadway Width, Curb-to-Curb

Figure 51-3

DECK WIDTH, OUT-TO-OUT (52)

Table: Bridge Field Name: deckwidth

Record and code a 4 digit number to show the out-to-out deck width to the nearest tenth of a foot. The measurement should be exclusive of flared areas for ramps. If the deck is encompassed by a superstructure (as through trusses), code the lateral clearance between superstructure members as the deck width (see Figures 52-1, 52-2 and 52-3).

Where traffic runs directly on the top slab (or wearing surface) of the culvert (e.g., an R/C box without fill) code the actual width (out-to-out). This will also apply where the fill is minimal so that the culvert headwalls affect the flow of traffic.

Where the roadway is on a fill carried across a pipe or box culvert and the culvert headwalls do not affect the flow of traffic, code 0000. This is considered proper inasmuch as a filled section over a culvert simply maintains the roadway cross-section.

EXCLUSIVE CODES: 0000 through 9999.

DATA REFERENCES: Bridge Plans and Field Measurements.

Location: Inventory Tab - Design Window (Screen 2 of 5)

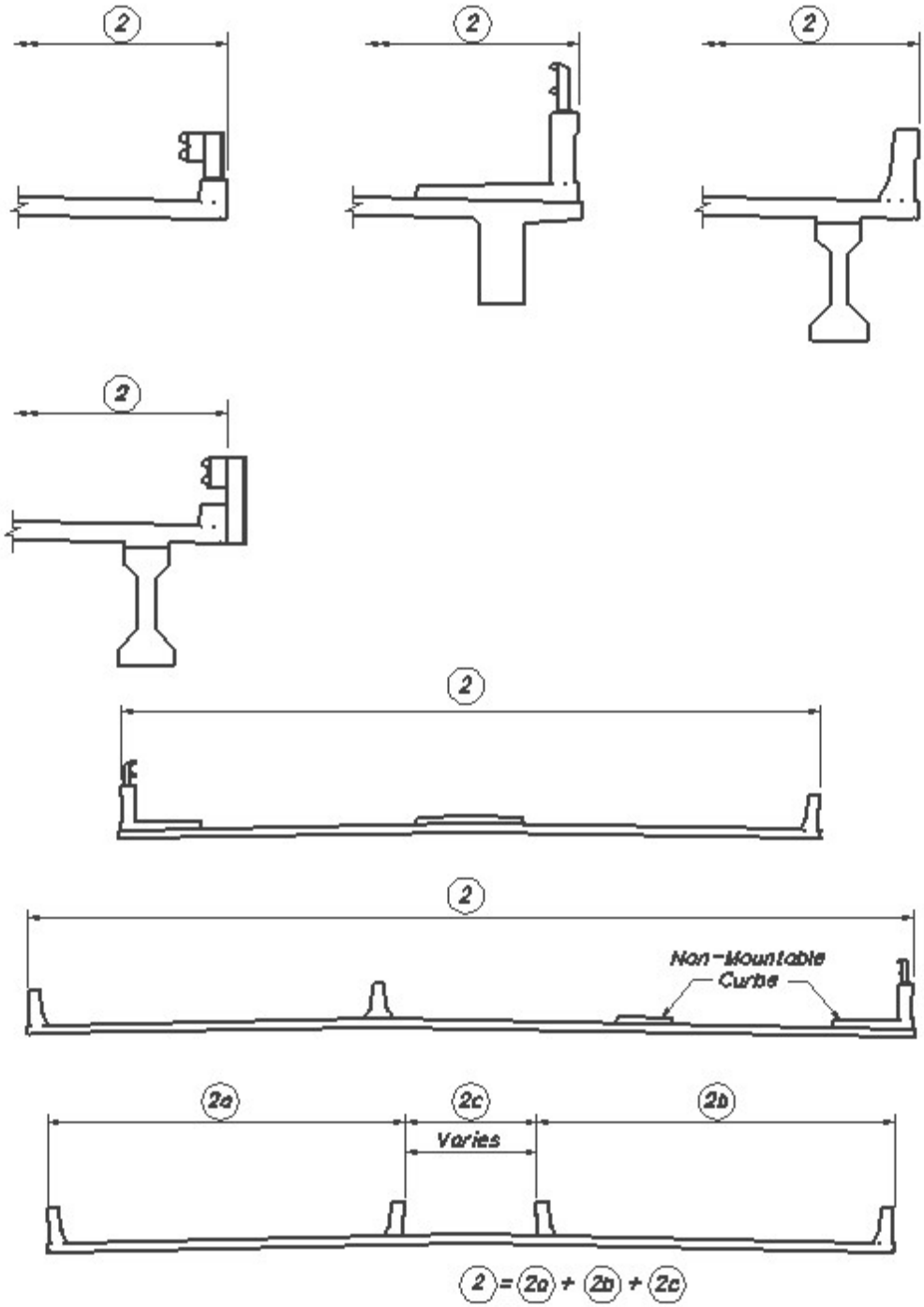

2 Item 52 - Deck Width, Out to Out

Figure 52-1

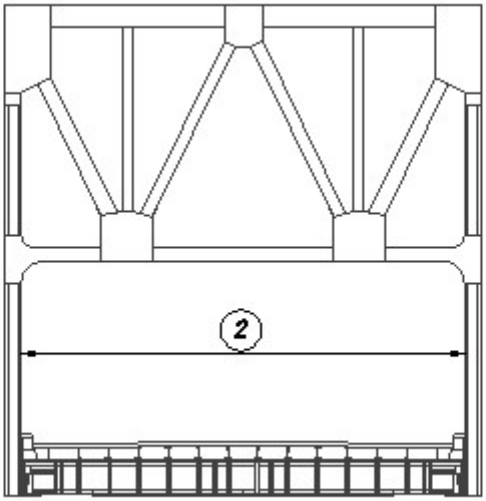

Figure 52-2

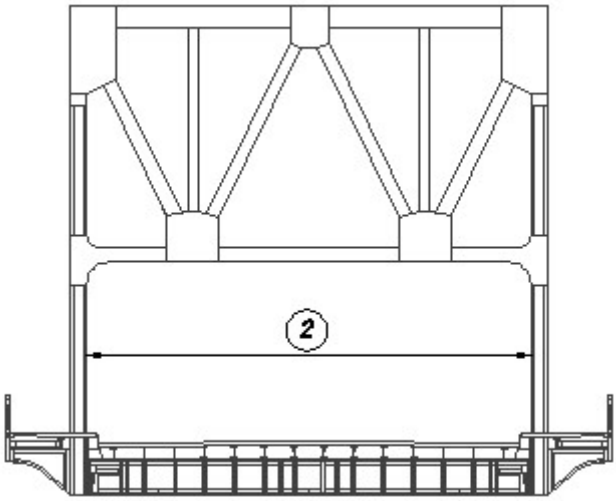

Figure 52-3

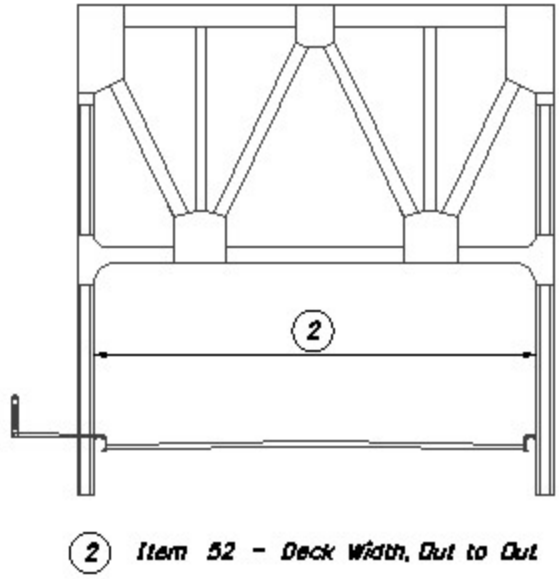

Figure 52-4

MINIMUM VERTICAL CLEARANCE OVER BRIDGE ROADWAY (53)

Table: Bridge Field Name: vclover

Record the actual minimum vertical clearance over the bridge roadway (including shoulders) to any restrictive part of the superstructure, such as cross members overhead. Also, consider restrictions due to overhead sign structures on the bridge. The clearance shall be rounded down to the nearest hundredth of a foot. This is a required field for over-lane sign structures, high mast light poles and traffic signal mast arms. (See Figures 53-1 and 53-2)

DATA REFERENCES: Bridge Plans and Field Measurements.

Location: Appraisal Tab – Other Ratings Window (Screen 1 of 2)

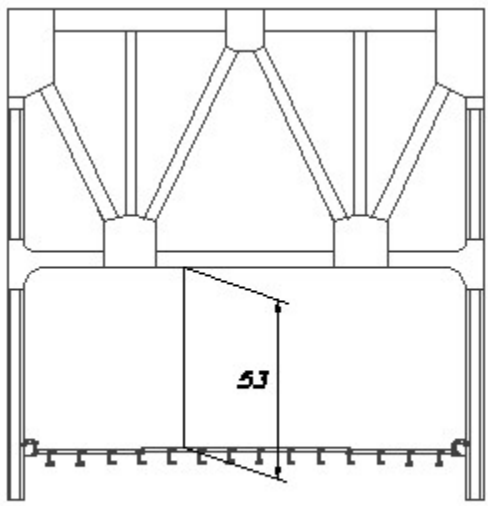

Item 53 - Minimum Vertical Clearance

Figure 53-1

MINIMUM VERTICAL UNDERCLEARANCE (54)

This item is used to record and code the minimum vertical clearance from the roadway (travel lanes only) or railroad track beneath the structure to the underside of the superstructure (see Figure 54-1). When both a railroad and highway are under the structure, code the most critical dimension. The coding is divided into two segments. This is a required field for over-lane sign structures and traffic signal mast arms (code as H) and high mast light poles (code as N).

SEGMENT A - REFERENCE FEATURE (First Position)

Table: Bridge Field Name: refvuc

The first segment is used to classify the reference feature from which the clearance measurement is taken. The coding is as follows:

EXCLUSIVE CODES	DESCRIPTION
H	Highway beneath structure.
R	Railroad beneath structure.
N	Feature not a highway or railroad.

SEGMENT B - MINIMUM VERTICAL UNDER CLEARANCE (Second through Fifth Positions)

Table Name: Bridge Field Name: vclrunder

The second segment is used to represent the minimum vertical clearance from that feature to the

structure, truncated to the hundredth of a meter (with an assumed decimal point). If the feature is not a highway or railroad, code the minimum vertical clearance “0000". When a restriction is 30 meters or greater, code “9999".

DATA REFERENCES: Field Measurements.

Location: Appraisal Tab – Other Ratings Window (Screen 1 of 2)

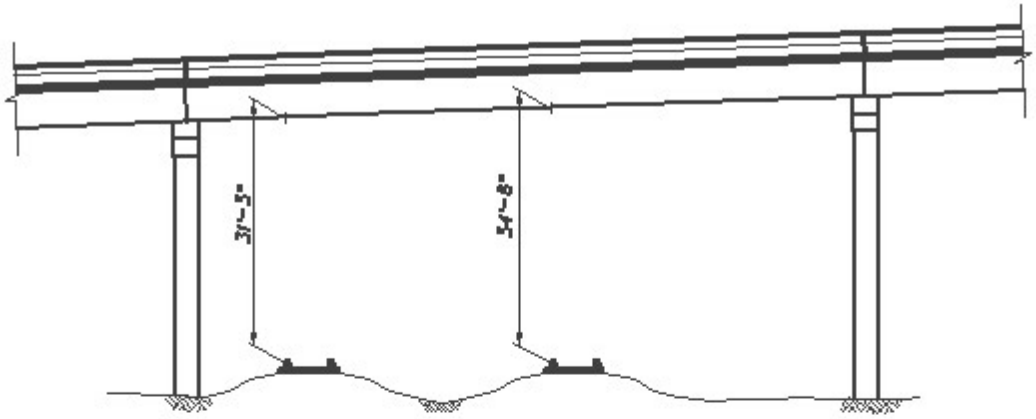

Railroad 31'-3" beneath structure CODE R3103

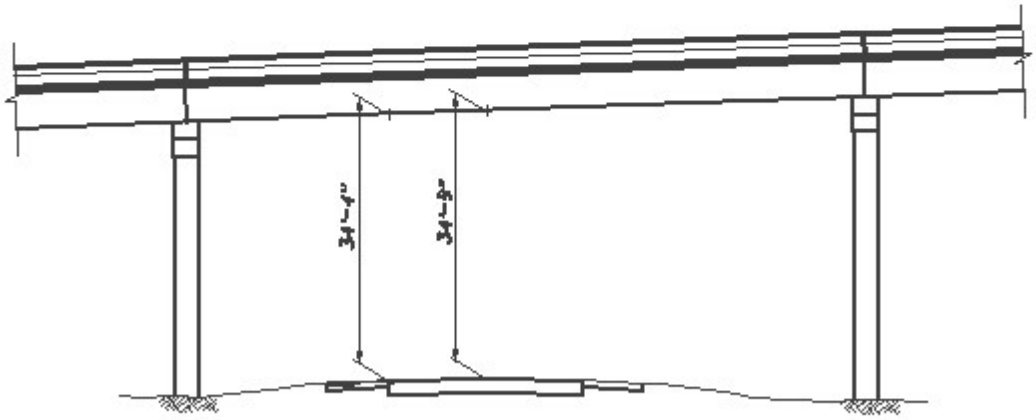

Highway 34'-4" beneath structure CODE H3404

Figure 54-1

MINIMUM LATERAL UNDER CLEARANCE ON RIGHT (55)

This item is used to record and code the minimum lateral under clearance on the right to the nearest tenth of a meter (with an assumed decimal point). When both a railroad and highway are under the structure, code the most critical dimension. This is a required field for over-lane sign structures and traffic signal mast arms (code as H) and high mast light poles (code as N). The code is divided into two segments:

SEGMENT A - REFERENCE FEATURE (First Position)

Table: Bridge Field Name: refhuc

The first segment is used to code the reference feature from which the clearance measurement is taken. The coding is as follows:

EXCLUSIVE CODES	DESCRIPTION
H	Highway beneath structure.
R	Railroad beneath structure.
N	Feature not a highway or railroad.

SEGMENT B - MINIMUM LATERAL UNDER CLEARANCE (Second through Fourth Positions)

Table: Bridge Field Name: hclrurt

The second segment is used to represent the minimum lateral under clearance on the right. The lateral clearance should be measured from the right edge of the roadway (excluding shoulders) or from the centerline (between rails) of the right hand track of a railroad to the nearest substructure unit (pier, abutment, etc.), to a rigid barrier, or to the toe of slope steeper than 3 to 1, e.g. 1 to 1 or 2 to 1. (See Figures 55-1 and 55-2). The clearance measurements to be recorded will be the minimum after measuring the clearance in both directions of travel. In the case of a dual highway this would mean the outside clearances of both roadways should be measured and the smaller distance recorded and coded.

If two related features are below the bridge, measure both and record the lesser of the two. An explanation should be written in the inspection report as to what was recorded. When the clearance is 30 meters or greater, code “999".

If the feature beneath the structure is not a railroad or highway, code “000" to indicate not applicable. The presence of ramps, acceleration, or turn lanes, is not considered in this item; therefore, the minimum lateral clearance on the right should be measured from the right edge of the through roadway.
Location: Appraisal Tab - Structure Appraisal (Screen 1 of 2)

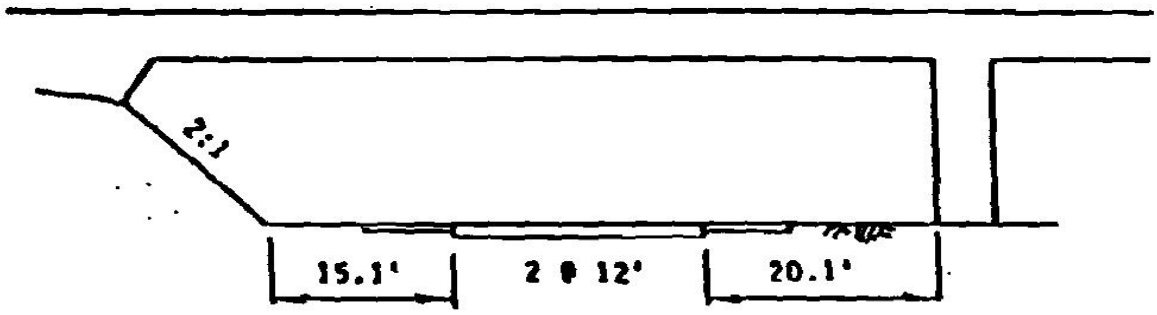

-- Lt. 15.1'Rt. for 2-way Traffic

15.1'Lt. 20.1'Rt. for 1-way Traffic

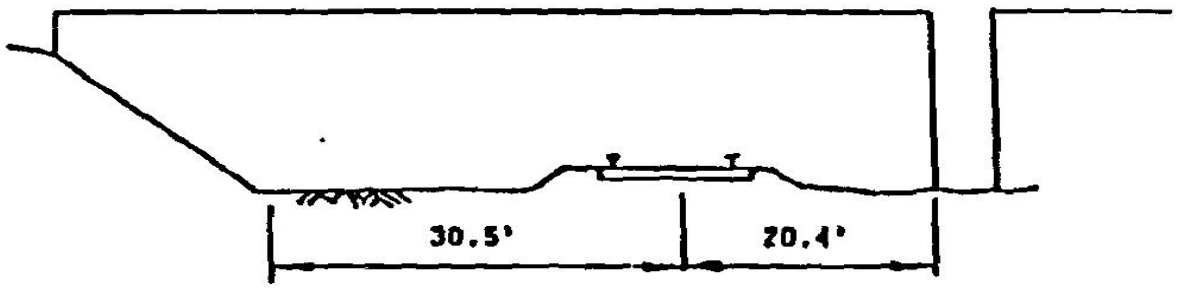

-- Lt. 20.4'Rt.

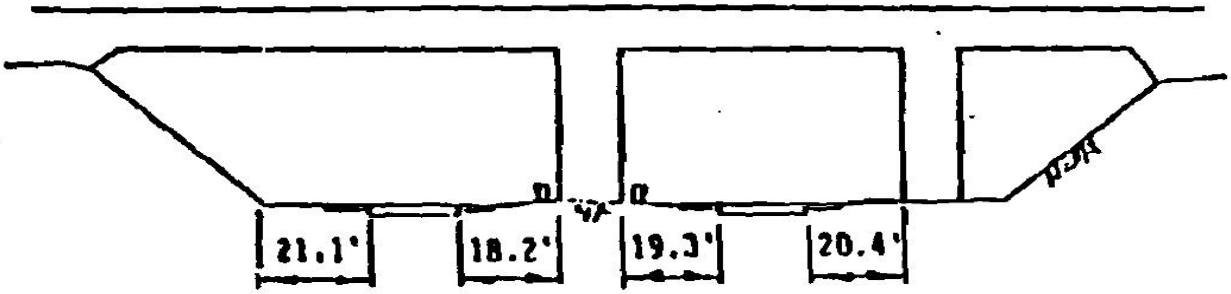

18.2'Lt. 20.4'Rt.

Figure 55-1

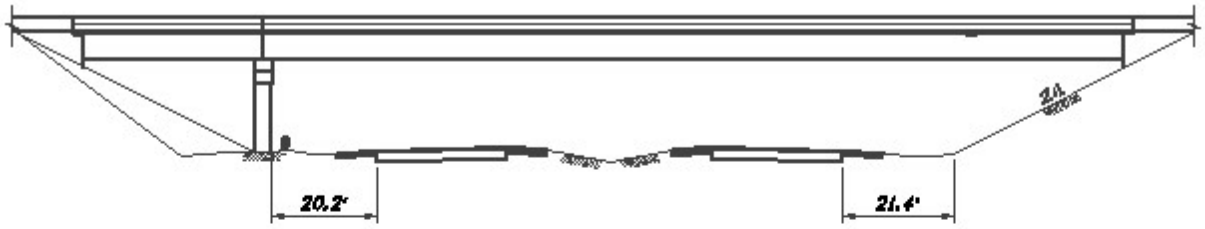

Open Lt. 20.2' Rt.

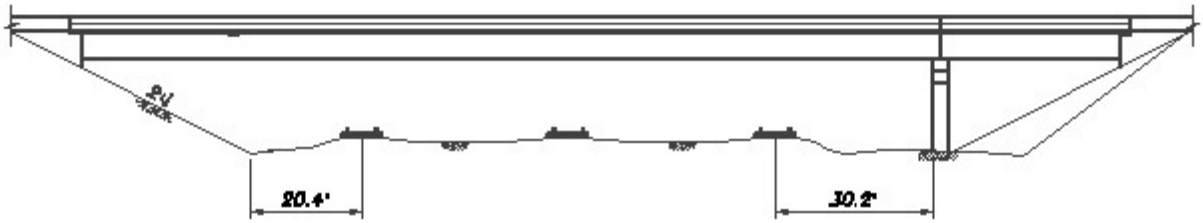

-- Lt. 20.4' Rt.

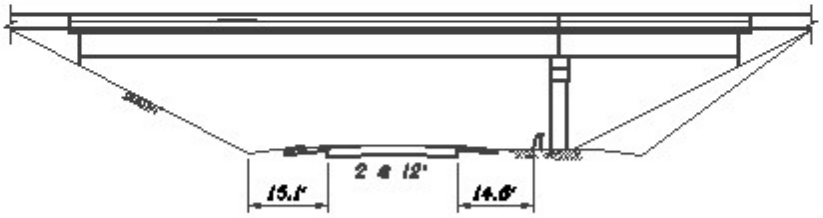

-- Lt. 14.6' Rt. for 2-way Traffic
15.1' Lt. 14.6' Rt. for 1-way Traffic

Figure 55-2

MINIMUM LATERAL UNDER CLEARANCE ON LEFT (56)

Table: Bridge Field Name: hclrult

Using a 3 digit number, record and code the minimum lateral under clearance on the left (median side for divided highways) to the nearest tenth of a foot (with an assumed decimal point). The lateral clearance should be measured from the left edge of the roadway (excluding shoulders), to the nearest substructure unit, to a rigid barrier, or to the toe of slope steeper than 3 to 1. (See Figure 56-1).

In the case of a dual highway, the median side clearances of both roadways should be measured and the smaller distance recorded and coded. If there is no obstruction in the median area, a notation of "open" should be recorded and “999" should be coded. For clearances greater than 30 meters, code 998. This is a required field for over-lane sign structures, high mast light poles and traffic signal mast arms.

Code “000" to indicate not applicable. This item is used for divided highways, one-way streets, and ramps. This item is not applicable to 2-way traffic or railroads.

EXCLUSIVE CODES: 000 through 999.

DATA REFERENCES: Field Measurements.

EXAMPLES:	CODE
Minimum lateral under clearance on left = 1.8	018
No obstruction in median area	999
Structure over water	000
Structure over railroad	000
Minimum lateral under clearance on left = 35.5	998

EDIT PROGRAM ERROR CHECK:
Must be coded with numeric data.

Location: Appraisal Tab – Other Ratings Window (Screen 1 of 2)

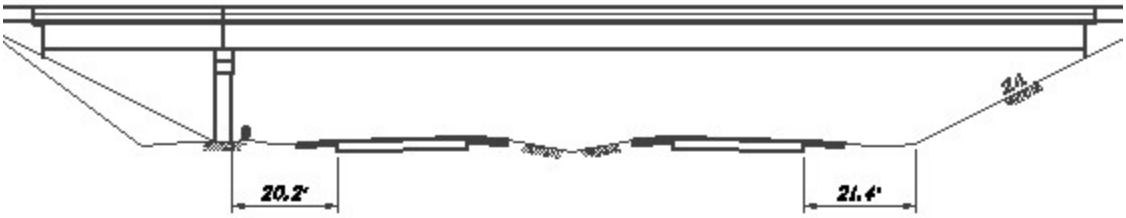

999 Lt.

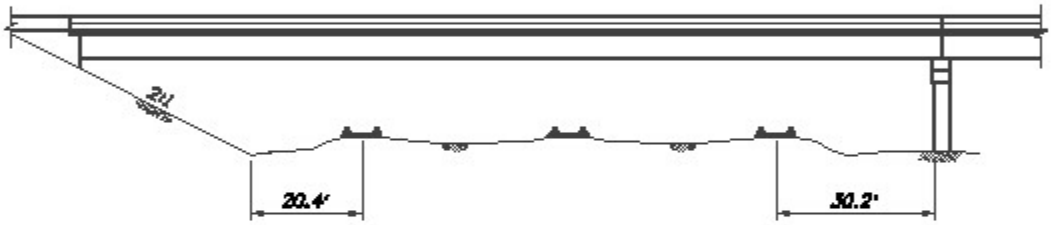

000 Lt.

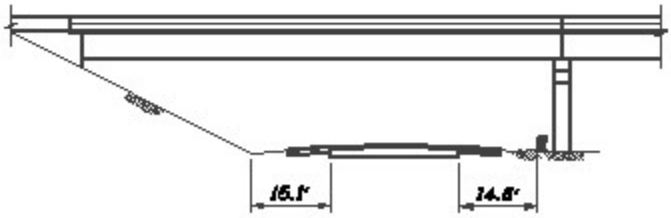

000 Lt. 14.6' Rt. for 2-way Traffic
15.1' Lt. 14.6' Rt. for 1-way Traffic

Figure 56-1

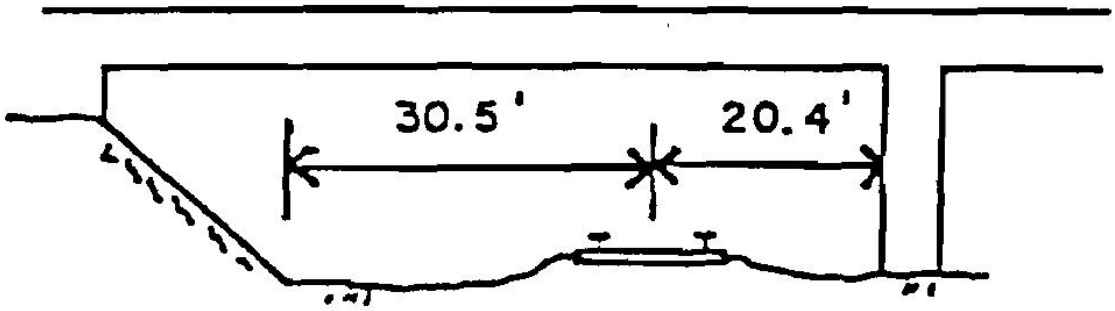

20.4 RT.

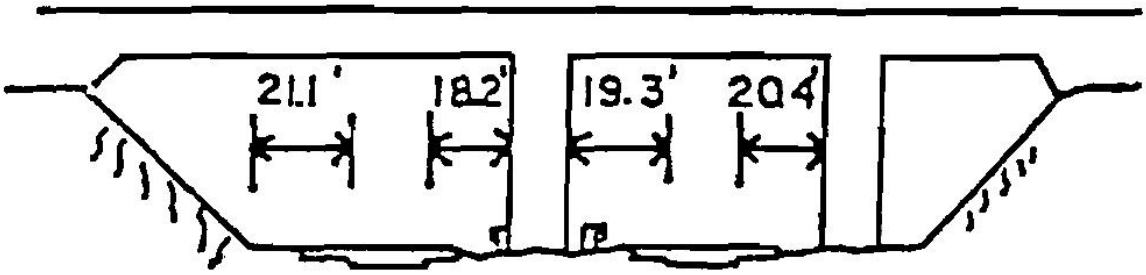

18.2 LT. 20.4 RT.

Figure 56-2

For Items 54B, 55B and 56 coding for over-lane sign structures, high mast light poles and traffic signal mast arms may be confusing. Use the table below as a guide for coding these Items.

Structure Type	Item 54B	Item 55B	Item 56
Span Sign over 1 traffic direction	Actual Meas.	Actual Meas.	Actual Meas.
Span Sign (Over Both Lanes no Barrier)	Actual Meas.	Actual Meas.	999
Span Sign (Over Both Lanes with Barrier)	Actual Meas.	Actual Meas.	Actual Meas.
Cant. Sign on Rt. Shoulder No Barrier in Median	*	Actual Meas.	999
Cant. Sign on Rt. Shoulder Barrier in Median	*	Actual Meas.	Actual Meas.
Cant. Sign in Median	*	Actual Meas.	Actual Meas.
High Mast Light Pole	0000	000	**
Traffic Signal Mast Arm	0000 ***	000 ***	000 ***

* If over highway, code actual measurement, otherwise code 99.9

** If high mast light pole is on right shoulder with no barrier in median code 000, otherwise code actual measurement.

*** Could be multiple structures assigned to one number so not applicable.

DECK (58)

Table Name: Inspevnt Field Name: dkrating

This item describes the overall condition rating of the deck. The condition of the wearing surface shall not be considered in the overall deck evaluation. Rate and code the conditions in accordance with the applicable condition ratings on Tables 58-1, 58-2 and 58-3. Code "N" for all culverts and arches where the roadway is supported by fill.

Decks integral with the superstructure will be rated as a deck only and not how they may influence the superstructure rating (for example; rigid frame, slab, deck girder or T-beam, voided slab, box girders, etc.). On bridges having composite decks (concrete deck on steel, concrete I-beams, or box beams), the deck condition may influence the superstructure rating after the deck reaches a poor or serious condition. Professional judgment, analysis, or testing may be required in certain cases.

Concrete decks should be inspected for cracking, scaling, spalling, leaching, chloride contamination, potholing, delamination, and full or partial depth failures. Steel grid decks should be inspected for broken welds, broken grids, section loss, and growth of filled grids from corrosion. Timber decks should be inspected for splitting, crushing, fastener failure, and deterioration from rot.

The condition of the wearing surface/protective system, joints, expansion devices, curbs, sidewalks, parapets, fascias, bridge rail, stay-in-place metal deck forms, and scuppers shall not

be considered in the overall deck evaluation.
Those portions of bridges that are being supported or strengthened by temporary members will be rated based on their actual condition. Temporary members are not to be considered in the rating.

Refer to Appendix D for special instructions for closed spandrel concrete deck arches.

EXCLUSIVE CODES: 0 through 9 or N.
DATA REFERENCES: FHWA Bridge Inspector's Reference Manual
The following tables can be used to code this item:
Location: Condition Tab

TABLE 58-1 CONCRETE DECKS

CODE	DESCRIPTION
N	NOT APPLICABLE
9	EXCELLENT - No noticeable or noteworthy deficiencies which affect the condition of the deck.
8	VERY GOOD - Minor transverse cracks and no spalling, scaling, delamination or water saturation.
7	GOOD - Sealable deck cracks, light scaling (less than 6 mm depth) or less than 10% of the deck is water saturated. This area would include any repaired areas and/or areas in need of corrective action. No spalling but with visible tire wear in the wheel lines.
6	SATISFACTORY - Excessive number of open cracks with or without efflorescence (excessive being at 1.5 meter intervals or less over the entire deck). Medium scaling (6 mm to 13 mm in depth), 2% or less of the deck spalled, or 10% to 20% of the deck area is water saturated and/or deteriorating. This area would include any repaired areas and/or areas in need of corrective action. Deterioration of deck edges or around scuppers. Some partial but no full depth failures.
5	FAIR - Excessive cracking resulting in 2% to 5% of the deck spalled. Heavy scaling (13 mm to 25mm in depth) or 20% to 40% of the deck is water saturated and/or deteriorating. This area would include any repaired areas and/or areas in need of corrective action. Disintegration of deck edges or around scuppers. Some partial and full depth failures. Considerable leaching through deck.
4	POOR - More than 5% of the deck is spalled or 40% to 60% of the deck is water saturated and/or deteriorating. This area would include any repaired areas and/or areas in need of corrective action. Many full depth failures present or imminent. Leaching throughout deck.
3	SERIOUS - More than 60% of the deck is water saturated and/or deteriorating. This area would include any repaired areas and/or areas in need of corrective action. Many full depth failures. This rating will apply if severe or critical signs of structural distress are visible on bridges where the deck is integral with the superstructure.
2	CRITICAL - The deck has advanced deterioration. Unless closely monitored it may be necessary to close the bridge until corrective action is taken.
1	"IMMINENT" FAILURE - The bridge deck is considered unsafe for vehicular use and the bridge is closed; however, corrective action may enable the structure to be placed into light service.
0	FAILED - The bridge deck is Out-of-Service and replacement is necessary.

TABLE 58-2 STEEL DECKS	
CODE	**DESCRIPTION**
N	NOT APPLICABLE
9	EXCELLENT - No noticeable or noteworthy deficiencies which affect the condition of the deck.
8	VERY GOOD - The steel deck is tightly secured to floor system and showing no corrosion.
7	GOOD - Some connections with minor corrosion. A few cracked welds and/or broken grids.
6	SATISFACTORY - Considerable corrosion with indications of initial section loss. Loose at many locations. Some cracked welds and/or broken grids.
5	FAIR - Heavy corrosion with areas of section loss. Loose at numerous locations. Numerous cracked welds and/or broken grids.
4	POOR - Heavy corrosion resulting in considerable section loss and some holes through deck. Majority of welds cracked and/or grids broken.
3	SERIOUS - This rating will apply if severe or critical signs of structural distress are visible.
2	CRITICAL - Many small holes due to corrosion through the deck.
1	“IMMINENT" FAILURE - The bridge deck is considered unsafe for vehicular use and the bridge is closed; however, corrective action may enable the structure to be placed into light service.
0	FAILED - The bridge deck is Out-of-Service and replacement is necessary.

TABLE 58-3 TIMBER DECKS	
CODE	**DESCRIPTION**
N	NOT APPLICABLE
9	EXCELLENT - No noticeable or noteworthy deficiencies which affect the condition of the deck.
8	VERY GOOD - No crushing, rotting or splitting. Tightly secured to floor system.
7	GOOD - Minor cracking or splitting with a few loose planks.
6	SATISFACTORY - Less than 20 percent of the planks rotted or crushed and in need of replacement. Many planks cracked or split. Many loose planks.
5	FAIR - Approximately 50 percent of the planks cracked, split, rotted or crushed and in need of replacement. Majority of planks are loose.
4	POOR - Greater than 60 percent of the planks are rotted, crushed and/or split necessitating the replacement of the entire deck.
3	SERIOUS - This rating will apply if severe or critical signs of structural distress are visible.
2	CRITICAL - Advanced deterioration with partial deck failure.
1	"IMMINENT" FAILURE - The bridge deck is considered unsafe for vehicular use and the bridge is closed; however, corrective action may enable the structure to be placed into light service.
0	FAILED - The bridge deck is Out-of-Service and replacement is necessary.

SUPERSTUCTURE (59)

Table Name: Inspevnt Field Name: suprating

This item describes the physical condition of all structural superstructure members. Rate and code the condition in accordance with the specific condition ratings found in Tables 59-0 and 59-1 through 59-4. Code "N" for all culverts. For filled arches the entire superstructure will be rated in this item.

The structural members should be inspected for signs of distress which may include cracking, deterioration, and section loss.

The condition of secondary members (bracing and non-load carrying members), bearings, joints, paint system, etc., shall not be included in this rating.

On bridges where the deck is integral with the super-structure, the superstructure condition rating may be affected by the deck condition. The resultant superstructure condition rating may be lower than the deck condition rating where the girders have deteriorated or been damaged.

Fracture critical components should receive careful attention because failure could lead to collapse of the bridge. In-depth inspections should be scheduled when signs of distress are noted and in some cases, advanced (non-visual) inspection techniques may be required to ascertain the condition.

Those portions of bridges that are being supported or strengthened by temporary members will be rated based on their actual condition and the temporary members are not to be considered in the rating of the item.

EXCLUSIVE CODES: N, 0 through 9.

DATA REFERENCES:

FHWA Bridge Inspector's Reference Manual and Inspection of Fracture Critical Bridge Members.

Must be coded 0 through 9 or N.

Location: Condition Tab

TABLE 59-1	
CONCRETE SUPERSTRUCTURE	
CODE	**DESCRIPTION**
N	Not Applicable.
9	EXCELLENT - No noticeable or noteworthy deficiencies which affect the condition of the superstructure.
8	VERY GOOD - Minor cracking and no spalling, delamination or water saturation.
7	GOOD - Hairline cracks with shallow and light spalling or less than 10 percent of the superstructure is water saturated.
6	SATISFACTORY - Excessive number of open cracks with or without efflorescence is present. Minor water saturation of slab ends, girder ends, precast items, etc., is present.
5	FAIR - Substantial water saturation and/or deterioration of slab ends, girder ends, precast girder ends or a substantial portion of the top of deck girder. No shear cracks are present and flexural bending cracks are minor in nature.
4	POOR - Extensive deterioration and spalling of girders, slabs, precast units, etc. Shear cracks are not present; however, flexural bending cracks may be present. Corroded reinforcing steel evident with measurable section loss. Load carrying capacity of some structural members may be diminished.
3	SERIOUS - Extensive spalling or deterioration of concrete is present. Large flexural bending cracks or diagonal shear cracks may be present.
2	CRITICAL - Close monitoring or bridge closure is required. Shear cracks or fractured or unbonded reinforcing steel is present.
1	"IMMINENT" FAILURE - The bridge is closed to vehicular traffic. Corrective action may put back into light service.
0	FAILED - The bridge is Out-of-Service. Replacement of the superstructure is required.

TABLE 59-2	
PRESTRESSED CONCRETE SUPERSTRUCTURE	
CODE	DESCRIPTION
N	Not Applicable
9	EXCELLENT - New condition.
8	VERY GOOD - No problems noted.
7	GOOD - Non-structural cracks less than 0.4 mm in width may be evident. No rust stains apparent.
6	SATISFACTORY - Minor concrete damage or deterioration. Non-structural cracks over 0.4 mm. Isolated and minor exposure of mild steel reinforcement may be present.
5	FAIR - Isolated and minor exposure of prestressing stands may be present. Structural cracks with little or no rust staining. Primary members sound, but may be cracked or spalled.
4	POOR - Moderate damage or deterioration to concrete portions of the member exposing reinforcing bars or prestressing strands. Possible bond loss. Structural cracks with medium to heavy rust staining may be present. May be loss of camber.
3	SERIOUS - Severe damage to concrete and reinforcing elements of the member. Severed prestressing strand(s), or strand(s) are visibly deformed. Major or total loss of concrete section in bottom flange. Major loss of concrete section in the web, but not occurring at the same location as of concrete section in the bottom flange. Horizontal misalignment to member or negative camber. Unless closely monitored it may be necessary to restrict or close the bridge until corrective action is taken.
2	CRITICAL - Critical damage to concrete and reinforcing elements of member. This damage may consist of one or more of the following: a. Cracks extend across the bottom flange or in the web directly above the bottom flange damage that are not closed below the surface damage. (This indicates that the prestressing strands have exceeded yield strength.) b. An abrupt lateral offset as measured along the bottom flange or lateral distortion of exposed prestressing strands. (This also indicates that the prestressing strands have exceeded yield strength.) c. Loss of prestress force to the extent that calculations show that repair cannot be made. d. Excessive vertical misalignment. e. Longitudinal cracks at the interface of the web and the top flange that are not substantially closed below the surface damage. (This indicates permanent deformation of stirrups.)
1	"IMMINENT" FAILURE - Critical damage requiring the replacement of a member. Bridge is closed to traffic, and installation of temporary falsework to safeguard the public and the bridge should be taken at the time of inspection.
0	FAILED - Bridge closed and out-of-service.

TABLE 59-3		
STEEL SUPERSTRUCTURES		
CODE	**TYPICAL STEEL COMPONENTS**	**FRACTURE CRITICAL MEMBERS**
	DESCRIPTION	DESCRIPTION
N	NOT APPLICABLE	NOT APPLICABLE
9	EXCELLENT - no noticeable or noteworthy deficiencies which affect the condition of the superstructure.	Same as Typical.
8	VERY GOOD - No visible corrosion.	Same as Typical.
7	GOOD - Minor surface rust without any section loss.	Same as Typical.
6	SATISFACTORY - Rusting evident but with no initial section loss (minor pitting, scaling, or flaking) in critical areas.	Same as Typical.
5	FAIR - Initial section loss in critical stress areas. Fatigue or out-of-plane distortion cracks may be present in non-critical area. Hinges may be showing significant corrosion problems.	Defective welds, nicks or gouges without fatigue cracks.
4	POOR - Significant section loss in critical stress area. Fatigue or out-of-plane distortion cracks may be present in major structural elements. Hinges may be frozen from corrosion. Load carrying capacity of structural members affected.	Defective welds, nicks or gouges with corresponding fatigue cracks. Any cracks located in the steel which are parallel to primary stress. Steps should be initiated for in-depth or non-destructive testing inspection and prompt repair of the damaged or fatigue prone areas of the bridge.
3	SERIOUS - Severe section loss or cracking in critical stress areas. Significant weakening of primary members evident.	Any crack in the steel which is perpendicular to the primary stress will result in serious consideration of bridge closure and immediate repair of the structure.
2	CRITICAL - Severe section loss in many areas with holes rusted through at numerous locations. Bridge closure or close monitoring is required.	Same as Typical.
1	“IMMINENT” FAILURE - The bridge is closed to vehicular traffic. Corrective action may put back into light service.	Same as Typical.
0	FAILED - The bridge is - Out-of-Service. Replacement of the superstructure is required.	Same as Typical.

TABLE 59-4	
TIMBER SUPERSTRUCTURES	
CODE	**DESCRIPTION**
N	Not Applicable.
9	EXCELLENT - No noticeable or noteworthy deficiencies which affect the condition of the superstructure.
8	VERY GOOD - Minor cracking or splitting of beams or stringers at insignificant locations.
7	GOOD - Incidence of insignificant decay, cracking, splitting or crushing of beams or stringers.
6	SATISFACTORY - Limited decay, cracking, splitting or crushing of beams or stringers.
5	FAIR - Substantial decay, cracking, splitting or crushing of beams or stringers.
4	POOR - Extensive decay, cracking, splitting or crushing of beams or stringers.
3	SERIOUS - Severe decay, cracking, splitting or crushing of beams or stringers.
2	CRITICAL - Beam ends crushed or split with some settlement of deck. Bridge closure or close monitoring is required.
1	"IMMINENT" FAILURE - The bridge is closed to vehicular traffic. Corrective action may put the structure back into light service.
0	FAILED - The bridge superstructure is Out-of-Service.

TABLE 59-5		
OVERHEAD SIGN STRUCTURES, HIGH MAST LIGHT POLES OR TRAFFIC SIGNAL MAST ARMS		
CODE	**PAINTED OR GALVANIZED METAL COMPONENTS**	**WEATHERING STEEL COMPONENTS**
	DESCRIPTION	DESCRIPTION
N	NOT APPLICABLE	NOT APPLICABLE
9	EXCELLENT - no noticeable or noteworthy deficiencies which affect the condition of the superstructure.	EXCELLENT - no noticeable or noteworthy deficiencies which affect the condition.
8	VERY GOOD - No visible corrosion.	VERY GOOD - The weathering steel is coated uniformly and remains in excellent condition.
7	GOOD - Minor surface rust without any section loss. Initial stages of galvanic corrosion on nuts/bolts present.	GOOD - Minor flaws may be present.
6	SATISFACTORY - Rusting evident but with no initial section loss (minor pitting, scaling, or flaking) in critical areas, including nuts and bolts.	SATISFACTORY - Surface corrosion, surface pitting, has formed or is forming. Weathering steel color is yellow orange to light brown. Oxide film has a dusty to granular texture.
5	FAIR - Initial section loss in critical stress areas. Deflection may be slightly out of normal range. Fatigue cracks present in secondary (diagonal & lateral members). Minor cracks in welds that have not propagated may be present.	FAIR - Defective welds, nicks or gouges without fatigue cracks. Deflection may be slightly out of normal range. Initial stages of pitting, scaling or flaking present. Minor cracks in welds that have not propagated may be present.
4	POOR - Significant section loss in critical stress area. Fatigue or out-of-plane distortion cracks may be present. Load carrying capacity affected. Significant section loss (>20% surface area) in nuts & bolts.	POOR - Defective welds, nicks or gouges with corresponding fatigue cracks. Significant pitting, scaling or flaking at base of column. Any cracks located in the steel which are perpendicular to primary stress. Steps should be initiated for in-depth or non-destructive testing inspection and prompt repair of the damaged or fatigue prone areas of the structure.
3	SERIOUS - Severe section loss or cracking in critical stress areas. Significant weakening of primary members evident.	SERIOUS - Severe section loss or cracking in critical stress areas. Significant weakening of primary members evident.
2	CRITICAL - Severe section loss in many areas with holes rusted through at numerous locations. Structure removal or close monitoring is required.	Same as Typical.
1	“IMMINENT” FAILURE - The structure has failed. Repair may be possible.	Same as Typical.
0	FAILED - The structure has failed. Replacement of the structure is required.	Same as Typical.

SUBSTRUCTURE (60)

Table Name: Inspevnt Field Name: subrating

This item describes the overall physical condition of piers, abutments, piles, fenders, footings, or other substructure elements. Rate and code the condition in accordance with the specific condition ratings found in Table 60-1 which shall be used as a guide in evaluating the substructure condition. Code "N" for all culverts.

All substructure elements should be inspected for visible signs of distress including evidence of cracking, section loss, settlement, misalignment, scour, collision damage, and corrosion. The rating given by Item 113-Scour Critical Bridges may have a significant effect on Item 60 if scour has substantially affected the overall condition of the substructure.

Integral abutment wingwalls to the first construction or expansion joint shall be included in the evaluation. For non-integral superstructure and substructure units, the substructure shall be considered as the portion below the bearings. For structures where the substructure and superstructure are integral, the substructure shall be considered as the portion below the superstructure.

The superstructure element will not influence the substructure rating when the superstructure and substructure are integral. For example, the deck or superstructure rating of a voided slab, box girder, rigid frame, etc., will not influence the substructure rating even though that portion of the deck or superstructure over the columns is designed as part of the substructure element.

Comprehensive rehabilitation of substructure units will normally restore the substructure unit to at least a 7 rating.

Those portions of bridges that are being supported or strengthened by temporary members will be rated based on their actual condition and the temporary members are not to be considered in the rating of the item.

EXCLUSIVE CODES: 0 through 9 or N.

DATA REFERENCES:

FHWA Bridge Inspector's Reference Manual and Inspection of Fracture Critical Bridge Members

EDIT PROGRAM ERROR CHECK:

Must be coded 0 through 9 or N.

Location: Condition Tab

TABLE 60-1	
SUBSTRUCTURE	
CODE	**DESCRIPTION**
N	Not Applicable.
9	EXCELLENT - No noticeable or noteworthy deficiencies which affect the condition of the substructure. Insignificant scrape marks caused by drift or collision.
8	VERY GOOD- Shrinkage cracks, light scaling or insignificant spalling which does not expose reinforcing steel. Insignificant damage caused by drift or collision with no misalignment and not requiring corrective action.
7	GOOD - Minor deterioration or initial disintegration, minor water saturation, cracking with some leaching or spalls on concrete or masonry unit with no effect on bearing area. Leakages of expansion devices have initiated minor cracking. Some rusting of steel without section loss. Insignificant decay, cracking, splitting or crushing of timber.
6	SATISFACTORY- Moderate deterioration or disintegration, spalls, moderate cracking and leaching on concrete or masonry units with little or no loss of bearing area. Initial (discernible) loss of steel section. Moderate decay, cracking, splitting or crushing of timber.
5	FAIR - Many concrete or masonry units show loss with exposed reinforcing steel. Significant but minor (measurable) section loss in steel members. Some timber piles require replacement. Repaired elements in good condition. Substantial decay, cracking, splitting or crushing of timber members. Minor exposure of piling as a result of erosion or scour. Additional cross bracing or backfilling is required. For fracture critical members, defective welds, nicks or gouges without fatigue cracks.
4	POOR - Structural cracks in concrete and masonry units. Extensive section loss in steel members. For fracture critical members, defective welds, nicks or gouges without corresponding fatigue cracks located in the steel which are parallel to the primary stress. Some piling and/or timber bents require replacement due to decay, cracking, splitting or crushing. Moderate scouring or undermining of footings starting to affect the stability of the unit. Minor settlement of the substructure may have occurred.
3	SERIOUS - Bearing area may be seriously deteriorated considerable loss of bearing area. Blocking and shoring considered necessary (not just precautionary) to maintain the safety and alignment of the structure. For fracture critical members: any crack in the steel which is perpendicular to the primary stress will result in serious consideration of bridge closure and immediate repair of the structure. Local failures are possible. Any further deterioration of other conditions noted in Code 4.
2	CRITICAL - Concrete cap may be soft and spalling with bottom row of reinforcing steel exposed with no bond to the concrete. Top of pier cap is split or concrete column has undergone shear failure. Scour is sufficient that substructure is near state of collapse. Pier has settled.
1	"IMMINENT" FAILURE - Bridge is closed to vehicular traffic. Corrective action may put the structure back into light service.
0	FAILED - The bridge is Out-of-Service. Replacement of the substructure is required.

TABLE 60-2	
SUBSTRUCTURE RATING FOR SIGN STRUCTURE, HIGH MAST LIGHT POLE OR TRAFFIC SIGNAL MAST ARM FOUNDATIONS	
CODE	**DESCRIPTION**
N	Not Applicable.
9	EXCELLENT - No noticeable or noteworthy deficiencies which affect the condition of the foundation.
8	VERY GOOD- Shrinkage cracks, light scaling or insignificant spalling which does not expose reinforcing steel. Insignificant corrosion on the anchor bolts or bearing plates and not requiring corrective action.
7	GOOD - Minor deterioration or initial disintegration, minor water saturation, cracking with some leaching or spalls on concrete with no effect on bearing area. Some corrosion of anchor bolts or bearing plates without section loss. Minor deterioration to grout pad.
6	SATISFACTORY- Moderate deterioration or disintegration, spalls, moderate cracking and leaching on concrete. Initial (discernible) loss of steel section for anchor bolts and bearing plates.
5	FAIR – Section loss with exposed reinforcing steel. Significant but minor (measurable) section loss to anchor bolts or bearing plates. Leveling nuts or locking nuts not present. Leveling nuts do not provide bearing. Unbraced anchor bolt length exceeds one bolt diameter, unless a well-constructed grout pad has been installed.
4	POOR - Structural cracks in concrete. Hollow sounding anchor bolts. Extensive section loss to anchor bolts or bearing plate. Minor settlement of the foundation may have occurred.
3	SERIOUS - Bearing area may be seriously deteriorated considerable loss of bearing area. Rotation of cylindrical foundation evident. Local failures are possible. Any further deterioration of other conditions noted in Code 4.
2	CRITICAL - Concrete may be soft and spalling. Foundation is split. Anchor bolts may be loose or not performing as designed. Structure has settled.
1	"IMMINENT" FAILURE – Structure has failed. Repair may be possible.
0	FAILED - The structure is Out-of-Service. Replacement of the foundation is required.

CHANNEL (61)

Table Name: Inspevnt Field Name: Chanrating

This item deals with the overall physical condition associated with the flow of water through the bridge or culvert. Stream stability and the condition of the channel, riprap, slope protection or stream control devices, such as spur dikes, are included in the evaluation. The inspector should be particularly concerned with visible signs of excessive water velocity which may affect undermining of slope protection or footings, erosion of banks and realignment of the stream which may result in immediate or potential problems. Accumulation of drift and debris on the superstructure and substructure should be noted. If the bridge is over a roadway exclusively, code "N".

The following descriptive codes in Table 61-1 shall be used as a guide in evaluating the condition of the channel and channel protection.

EXCLUSIVE CODES: 0 through 9 or N.

DATA REFERENCES:
AASHTO Bridge Manual and FHWA Inspector's Training Manual 90.

Location: Condition Tab

TABLE 61-1	
CHANNEL AND CHANNEL PROTECTION	
CODE	**DESCRIPTION**
N	NOT APPLICABLE - Use when bridge is not over a waterway.
9	EXCELLENT - No noticeable or noteworthy deficiencies which affect the condition of the channel.
8	VERY GOOD- Banks are protected or well vegetated. River control devices, such as spur dikes and embankment protection, are not required or are in a stable condition.
7	GOOD - Bank protection is in need of minor repairs. River controls devices and embankment protections have minor damage. Banks and/or channel have minor amounts of drift.
6	SATISFACTORY - Bank is beginning to slump. River control devices and embankment protection have considerable minor damage. There is minor stream bed movement evident. Debris is restricting the waterway slightly.
5	FAIR - Bank protection is being eroded. River control devices and/or embankment have major damage. Trees and brush restrict the channel.
4	POOR - Bank and embankment protection undermined with corrective action required. River control devices have severe damage. Large deposits of debris in the waterway. The stream bed has changed its location but is causing no problem.
3	SERIOUS - Bank protection has failed completely. River control devices have been destroyed. Stream bed aggradation or degradation has changed the waterway to now threaten the bridge and/or approach roadway.
2	CRITICAL - The waterway has changed to the extent that the bridge is near a state of collapse.
1	"IMMINENT" FAILURE - Bridge closed because of channel failure. Corrective action may put the structure back into light service.
0	FAILED - Bridge closed because of channel failure. Replacement necessary.

CULVERT (62)

Table Name: Inspevnt Field Name: Culvrating

This item evaluates the alignment, settlement, joints, structural condition, scour and stability of walls. The rating code is intended to be an overall condition evaluation of the culvert. Integral wingwalls will be included to the first construction of expansion joint.

Comprehensive rehabilitation of culverts will normally restore the unit to a minimum rating of 7.

The following descriptive codes in Table 62-1 shall be used as a guide in evaluating the culvert condition.

Code "N" if the structure is not a culvert.

EXCLUSIVE CODES: 0 through 9 or N.

DATA REFERENCES:
FHWA Culvert Inspection Manual.

Location: Condition Tab

TABLE 62-1	
CULVERTS	
CODE	DESCRIPTION
N	Not Applicable - Use if structure is not a culvert.
9	EXCELLENT - No deficiencies.
8	VERY GOOD - No noticeable or noteworthy deficiencies which affect the condition of the culvert. Insignificant scrape marks caused by drift.
7	GOOD - Shrinkage cracks, light scaling, and insignificant spalling which does not expose reinforcing steel. Insignificant damage caused by drift with no misalignment and not requiring corrective action. Some minor scouring has occurred near curtain walls, wingwalls, or pipes. Metal culverts have a smooth symmetrical curvature with superficial corrosion and no pitting.
6	SATISFACTORY - Deterioration or initial disintegration, minor chloride contamination, cracking with some leaching, or spalls on concrete or masonry walls and slabs. Local minor scouring at curtain walls, wingwalls, or pipes. Metal culverts have a smooth curvature, non-symmetrical shape, significant corrosion or moderate pitting.
5	FAIR - Moderate to major deterioration or disintegration, extensive cracking and leaching, or spalls on concrete or masonry walls and slabs. Minor settlement or misalignment. Noticeable scouring or erosion at curtain walls, wingwalls, or pipes. Metal culverts have significant distortion and deflection in one section, significant corrosion or deep pitting.
4	POOR - Large spalls, heavy scaling, wide cracks, considerable efflorescence, or opened construction joint permitting loss of backfill. Considerable settlement or misalignment. Considerable scouring or erosion at curtain walls, wingwalls or pipes. Metal culverts have significant distortion and deflection throughout, extensive corrosion or deep pitting.
3	SERIOUS - Any condition described in Code 4 but which is excessive in scope. Severe movement or differential settlement of the segments, or loss of fill. Holes may exist in walls or slabs. Integral wingwalls nearly severed from culvert. Severe scour or erosion at curtain walls, wingwalls or pipes. Metal culverts have extreme distortion and deflection in one section, extensive corrosion, or deep pitting with scattered perforations.
2	CRITICAL - Integral wingwalls collapsed severe settlement of roadway due to loss of fill. Section of culvert may have failed and can no longer support embankment. Complete undermining at curtain walls and pipes. Corrective action required to maintain traffic. Metal culverts have extreme distortion and deflection throughout with extensive perforations due to corrosion.
1	"IMMINENT" FAILURE - Culvert closed. Corrective action may put the structure back into light service.
0	FAILED - Culvert closed. Replacement necessary.

OPERATING TYPE (63)

Table Name: Bridge Field Name: ortype

Code which load rating method was used to determine the Operating Rating from the codes indicated below.

EXCLUSIVE CODES	DESCRIPTION
0	FIELD EVALUATION AND DOCUMENTED ENGINEERING JUDGMENT
1	LOAD FACTOR (LF)
2	ALLOWABLE STRESS (AS)
3	LOAD AND RESISTANT FACTOR (LRFR)
4	LOAD TESTING
5	NO RATING ANALYSIS OR EVALUATION PERFORMED

Code 0 is to be used when the load rating is determined by documented field evaluation and engineering judgment. Typically this method is reserved for structures that cannot be analyzed. Field evaluation and engineering ratings must be documented in the bridge record file.

Code 5 is to be used when the bridge has not been load rated or load rating documentation does not exist.

Location: Appraisal Tab – Load Ratings (Screen 2 of 2)

OPERATING RATING (64)

Table Name: Bridge Field Name: orload

Code the longitudinal operating rating as a 3 digit number to represent the total mass in tons of the entire vehicle measured to the nearest tenth of a ton. It should be emphasized that only HS loading shall be used to determine the operating rating except for ratings determined using the LRFR method. When the rating method is LRFR, the rating is calculated as a rating factor based on the HL93 design load. The rating factor should be multiplied by 36 English tons and the result entered.

The FHWA has chosen the LF method as the standard for computing inventory and operating ratings reported to the NBI. The highway agencies may, however, elect to use LF, AS or LRFD to establish load limits for purposes of load posting. If the bridge will not carry a minimum of 3.0 tons of live load, the operating rating shall be coded "00.0"; and consistent with the direction of the AASHTO Manual, it shall be closed.

<u>The use or presence of a temporary bridge (NBI Item 41=E OPEN,TEMP STRUC) requires special consideration in coding. In such cases, since there is no permanent bridge, Items 64 and 66 should be coded as "00.0" even though the temporary structure is rated for as much as full legal load.</u>

A bridge shored up or repaired on a temporary basis is considered a temporary bridge and the inventory and operating rating shall be coded as if the temporary shoring were not in place. See Temporary Structure Designation Item 103 for definition of a temporary bridge.

Code "99.9" mtons for a structure under sufficient fill such that, according to AASHTO design, the live load is insignificant in the structure load capacity.

If the rating exceeds 110 English tons, enter 110 (99.9 metric).

DATA REFERENCES:

AASHTO Manual for Maintenance Inspection of Bridges; Bridge Load Rating, Permitting, and Posting Manual, Topic No. 850-010-035.

Location: Appraisal Tab – Load Ratings (Screen 2 of 2)

INVENTORY TYPE (65)

Table Name: Bridge Field Name: irtype

Code which load rating method was used to determine the Inventory Rating from the codes indicated below.

EXCLUSIVE CODES	DESCRIPTION
0	FIELD EVALUATION AND DOCUMENTED ENGINEERING JUDGMENT
1	LOAD FACTOR (LF)
2	ALLOWABLE STRESS (AS)
3	LOAD AND RESISTANT FACTOR (LRFR)
4	LOAD TESTING
5	NO RATING ANALYSIS OR EVALUATION PERFORMED

Code 0 is to be used when the load rating is determined by documented field evaluation and engineering judgment. Typically this method is reserved for structures that cannot be analyzed. Field evaluation and engineering ratings must be documented in the bridge record file.

Code 5 is to be used when the bridge has not been load rated or load rating documentation does not exist.

Location: Appraisal Tab – Load Ratings (Screen 2 of 2)

INVENTORY RATING (66)

Table Name: Bridge Field Name: irload

Code the longitudinal inventory rating as a 3 digit number to represent the gross vehicular weight in tons measured to the nearest tenth of a ton. If the bridge is closed and/or will not carry any live load, code this segment "00.0".

This capacity rating, referred to as the Inventory Rating, will result in a load level which can safely utilize an existing structure for an indefinite period of time. Only the HS loading shall be used to determine the inventory rating except for ratings determined by the LRFR method. Code the

Inventory Rating as a 3 digit number to represent the total mass in tons of the entire vehicle measured to the nearest tenth of an English ton. When the rating method is LRFR, the rating is calculated as a rating factor based on the HL93 design load. The rating factor should be multiplied by 36 English tons and the result entered.
The statements in Item 64- Operating Rating apply to this item also.

Code "99.9" mtons for a structure under sufficient fill such that according to AASHTO design, the live load is insignificant in the structure load capacity.

If the rating exceeds 110 English tons, enter 110 (99.9 metric).

DATA REFERENCES: None.

Location: Appraisal Tab – Load Ratings (Screen 2 of 2)

STRUCTURAL EVALUATION (67)

Table Name: Inspevnt Field Name: strrating

The coding of this item will be generated automatically by the computer and will not be coded by the inspector. For a reference on how the Structural Evaluation Rating is calculated refer to the FHWA's "Recording and Coding Guide for the Structure Inventory and Appraisal of the Nation's Bridges." Location: Appraisal Tab – Other Ratings Window (Screen 1 of 2)

DECK GEOMETRY (68)

Table Name: Inspevnt Field Name: deckgeom

The coding of this item will be generated automatically by the computer and will not be coded by the inspector. For a reference on how the Deck Geometry Rating is calculated refer to the FHWA's "Recording and Coding Guide for the Structure Inventory and Appraisal of the Nation's Bridges." Location: Appraisal Tab – Other Ratings Window (Screen 1 of 2)

UNDERCLEARANCES (69)

Table Name: Inspevnt Field Name: underclr

The coding of this item will be generated automatically by computer and will not be coded by the bridge inspector. For a reference on how the Underclearances Rating is calculated refer to the FHWA's "Recording and Coding Guide for the Structure Inventory and Appraisal of the Nation's Bridges."

Location: Appraisal Tab – Other Ratings Window (Screen 1 of 2)

POSTING (70)

Table Name: Bridge Field Name: posting

The National Bridge Inspection Standards require the posting of load limits only if the maximum legal load in the State of Florida produces stresses in excess of the operating stress level. If the load capacity at the operating level is such that posting is required, this item shall be coded 0 through 4. If no posting is required at the operating level, this item shall be coded 5.

This item evaluates the load capacity of a bridge in comparison to the Florida legal loads. Although posting a bridge for load-carrying capacity is required only when the maximum legal load exceeds the operating rating capacity, local governments may choose to post at lower rating capacities. This posting practice may appear to produce conflicting coding when Item 41-Structure Open, Posted or Closed to Traffic is coded to show the bridge as actually posted at the site and Item 70 is coded as bridge posting is not required. Since different criteria are used for coding these two items, this coding is acceptable and correct when the highway agency elects to post at less than the operating rating stress level. Item 70 shall be coded 0 through 4 only if a Florida legal load exceeds that permitted under the operating rating.

The use or presence of a temporary bridge affects the coding. The load capacity shall reflect the actual capacity of the temporary bridge at the operating rating. This also applies to bridges shored up or repaired on a temporary basis.

The degree that the operating rating stress level is under the maximum legal load stress level may be used to differentiate between codes. As a guide and for coding purposes only, the following values may be used to code this item.

Relationship of Operating Rating Stress

CODE	to Legal Load Stress (Operating Factor)		Posting
5	AT/ABOVE LEGAL LOADS	1.000 up	Not Required
4	0.1 TO 9.9 % BELOW	0.901 - 0.999	Required
3	10.0 TO 19.9% BELOW	0.801 - 0.900	Required
2	20.0 TO 29.9% BELOW	0.701 - 0.800	Required
1	30.0 TO 39.9% BELOW	0.601 - 0.700	Required
0	> 39.9% BELOW	0.000 - 0.600	Required

EXCLUSIVE CODES: 0 through 5.

DATA REFERENCES:
AASHTO Manual for Condition Evaluation of Bridges and FDOT Bridge Load Rating, Permitting, and Posting Manual, Topic No. 850-010-035.

EXAMPLES:

Sample Bridge

MAXIMUM LEGAL LOAD CASE							
Florida Legal Vehicle	**SU2**	**SU3**	**SU4**	**C3**	**C4**	**C5**	**ST5**
Gross Vehicular WT. (Tons)	**17**	**33**	**35**	**28**	**36.65**	**40**	**40**
Operation Rating (Tons)	**16**	**24.1**	**28**	**31.9**	**35.9**	**39.2**	**40.8**
Operating Factor (OR/GVW)	**0.94**	**0.73**	**0.80**	**1.14**	**0.98**	**0.98**	**1.02**

The operating rating is in the range of 0.701---0.800; therefore, code "20 TO 29.9 % BELOW".

Location: Appraisal Tab – Load Ratings Window (Screen 2 of 2)

WATERWAY ADEQUACY (71)

Table: Inspevnt Field Name: wateradq

This item appraises the waterway opening with respect to passage of flow through the bridge. The following codes is used in evaluating waterway adequacy (interpolate where appropriate). Site conditions may warrant somewhat higher or lower ratings than indicated by the table (e.g., flooding of an urban area due to a restricted bridge opening).

Where overtopping frequency information is available, the descriptions given in the table for chance of overtopping mean the following:

Remote	-	greater than 100 years
Slight	-	11 to 100 years
Occasional	-	3 to 10 years
Frequent	-	less than 3 years

Adjectives describing traffic delays mean the following:

Insignificant	-	Minor inconvenience. Highway passable in a matter of hours.
Significant	-	Traffic delays of up to several days.
Severe	-	Long term delays to traffic with resulting hardship.

TABLE 71-1			
WATERWAY ADEQUACY			
Functional Classification			Description
Principal Arterials-Interstates, Freeways or Expressways	Other Principal and Minor Arterials and Major Collectors	Minor Collectors, Locals	
Code	Code	Code	
N	N	N	Bridge not over a waterway.
9	9	9	Bridge deck and roadway approaches above flood water elevations (high water). Chance of overtopping is remote.
8	8	8	Bridge deck above roadway approaches. Slight chance of overtopping roadway approaches.
6	6	7	Slight chance of overtopping bridge deck and roadway approaches.
4	5	6	Bridge deck above roadway approaches. Occasional overtopping of roadway approaches with insignificant traffic delays.
3	4	5	Bridge deck above roadway approaches. Occasional overtopping of roadway approaches with significant traffic delays.
2	3	4	Occasional overtopping of bridge deck and roadway approaches with significant traffic delays.
2	2	3	Frequent overtopping of bridge deck and roadway approaches with significant traffic delays.
2	2	2	Occasional or frequent overtopping of bridge deck and roadway approaches with severe traffic delays.
0	0	0	Bridge closed.

EXCLUSIVE CODES: 0, 2 through 9 and N.

DATA REFERENCES:

Historical Records and Forecast from the District Drainage Engineer.

Location: Condition Tab

APPROACH ALIGNMENT (72)

Table Name: Inspevnt Field Name: appralign

Code the rating based on the adequacy of the approach roadway alignment. This item identifies those bridges which do not function properly or adequately due to the alignment of the approaches. It is not intended that the approach roadway alignment be compared to current standards but rather to the existing highway alignment. This concept differs from other appraisal evaluations. The establishment of set criteria to be used at all bridge sites is not appropriate for this item. The basic criterion is how the alignment of the roadway approaches to the bridge relates to the general highway alignment for the section of highway the bridge is on.

The individual structure is rated in accordance with the general appraisal rating guide in lieu of specific design values. The approach roadway alignment will be rated intolerable (a code of 3 or less) only if the horizontal or vertical curvature requires a substantial reduction in the vehicle operating speed from that on the highway section. A very minor speed reduction could be rated a 6, and when a speed reduction is not required, the appraisal code could be an 8. Additional codes may be selected between these general values.

For example, if the highway section requires a substantial speed reduction due to vertical or horizontal alignment, and the roadway approach to the bridge requires only a very minor additional speed reduction at the bridge, the appropriate code would be a 6. This concept is used at each bridge site.

Speed reductions necessary because of structure width and not alignment are not considered in evaluating this item.

Use the following table as an aid in coding this item:

APPRAISAL RATING	ALIGNMENT CONDITION
9	NO SPEED RED NO CURVE - Bridge on straight or long tangent alignment greater than 1500 feet with 0% to 3% grade. No speed reduction is required for all vehicles.
8	NO SPEED RED THRU CURVE - Bridge between two curves, reverse or same direction, with a tangent length of 500 to 1500 feet but with enough transition or super-elevation runoff length from P.C. to backwall of bridge and on a 0% to 3% grade. Speed reduction is not required.
7	N0 ACCEL/REDUCE CURVE - Bridge within curve with degree of curve

equal to or less than three degrees and on a 0% to 3% grade.

6 TOUCH BRAKE OR DOWNSHIFT - Bridge on a straight alignment but on a crest or vertical curve with grades moderately greater than 3%. The roadway approach to the bridge requires 10% speed reduction.

5 STEADY BRAKE/DOWNSHIFT - Bridge between two curves, reverse or same direction, with a tangent length of 500 to 1500 feet but with enough transition or super-elevation runoff length from P.C. to backwall of bridge with grade moderately above 3%. The speed reduction is 20%.

4 BRAKE HALFWAY TO FLOOR - Bridge within curve with degree of curve equal to or less than three degrees with grades steeper than 5%. The speed reduction is 25% to 30%.

3 BRAKE FLOORED/PUMPED - Bridge between two curves, reverse or same direction, with short tangent and without enough transition of super-elevation runoff. The speed reduction is over 30%.

2 ALMOST COMPLETE STOP - Bridge within a curve with a degree of curvature greater than three degrees or a bridge within an “S” curve, which can be tolerated by signing and regrading to a reduced speed or posted speed to 25 mph.

EXCLUSIVE CODES: 2 through 9.

Location: Appraisal Tab – Other Ratings Windowl (Screen 1 of 2)

TYPE OF WORK (75)

The information recorded for this item is the type of work proposed to be accomplished on the structure to improve it to the point that it will provide the type of service needed and whether the proposed work is to be done by contract or owner forces. Code a 3 digit number composed of two segments. This item must be coded for bridges eligible for the Highway Bridge Replacement and Rehabilitation Program. Code "000" if replacement, repair or rehabilitation is not planned or needed. If repair work is proposed for a bridge replacement candidate, code the type of work for replacement.

Rehabilitation is the renovation work which makes the bridge meet current design standards. Repair is the work which restores a bridge to its original design standards but not necessarily to the current design standards.

SEGMENT A - TYPE OF WORK PROPOSED (First and Second Positions)

Table: Bridge Field Name: propwork

The first segment is used to represent the proposed type of work on the structure. The coding is as follows:

CODE	DESCRIPTION
31 *	Replacement of bridge or other structure because of substandard load carrying capacity or substandard bridge roadway geometry. Includes Action Types 41 and 42.
32 *	Replacement of bridge or other structure because of road relocation. This type of work is not eligible to be funded by the Bridge Program (Program 05).
33	Widening of existing bridge or other major structure without deck rehabilitation or replacement; includes culvert lengthening. This type of work is not eligible to be funded by the Bridge Program (Program No. 02 and 05).
34	Widening of existing bridge with deck rehabilitation or replacement. This type of work is not eligible to be funded by the Bridge Program (Program No. 02 and 05).
35	Bridge rehabilitation because of general structure deterioration or inadequate strength. Includes most rehabilitation action categories.
36	Bridge deck rehabilitation with only incidental widening. Includes some rehabilitation action categories.
37	Bridge deck replacement with only incidental widening. Includes some rehabilitation categories.
38	Other repair work. Includes all minor repairs, periodic maintenance action categories.
39	Preventive maintenance work (cleaning and lubrication, painting, penetrant sealer work, cathodic protection work, removing organic materials on structures, cutting brush, etc.) Includes all routine maintenance action categories.
00	Improvement work is not needed.

* Codes 31 and 32 should only be used when at least one component (Deck, Superstructure, Substructure or Culvert) is rated 4 or below.

SEGMENT B - WORK DONE BY CONTRACT OR OWNERS FORCE

Table: Bridge Field Name: workby

The second segment is used to indicate whether the proposed work is done by contract (Work Program) or by owners forces (Bridge Work Order System). The coding is as follows:

CODE	DESCRIPTION
1	Work to be done by contract. Code 1 for bridge work intended to be accomplished by either the State Bridge Repair Program (Program 02) or the State Bridge Replacement Program (Program 05).
2	Work to be done by owner's forces. Code 2 for bridge work intended to be accomplished by routine maintenance funds through the Bridge Work Order System, either by in-house maintenance forces or maintenance contract.

0 No work is needed.

EXCLUSIVE CODES: 311 through 392 or 000.

DATA REFERENCES: None.

EXAMPLES: CODE

A bridge is to be replaced by FM contract because it has deteriorated to the point that it can no longer carry legal loads. The same code should be used if the bridge is replaced because the original design was too light to accommodate today's legal loads.
311

A bridge superstructure and substructure are to be rehabilitated by maintenance contract to increase the bridge's load capacity. 352

A bridge deck is to be rehabilitated by FM contract and a new bridge rail to be added which results in incidental widening of 1 meter. 361

A bridge deck is to be replaced by FM contract and the deck cantilever overhang extended 1 meter, which is the maximum that can be done without adding another line of girders to the superstructure. 371

Repair or replace the bridge joints by district-wide FM contract. 381

Repair the concrete spalls on the deck by state force.
382

Add a crutch bent near the existing pier to strengthen the substructure by state force. 352

Apply the penetrant sealer on the substructure by maintenance contract. 392

Remove the organic materials on the wingwalls and pier caps by state force. 392

The lubrication work of the movable structure is not operated on schedule and needs to be improved by state work. 392

Location: Project Plan Tab - NBI Project Data or Work Tab –NBI Project Data

LENGTH OF STRUCTURE IMPROVEMENT (76)

Table: Bridge Field Name: implen

Code a 6 digit number that represents the length of the proposed bridge improvement to the nearest tenth of a meter (with an assumed decimal point). For replacement or rehabilitation of the entire bridge, the length should be measured along the roadway centerline between the backfaces of backwalls of the two abutments or from pavement notch to pavement notch. For replacement or rehabilitation of only part of the structure, use the length of the portion to be improved.

This item must be coded for bridges eligible for the Highway Bridge Replacement and Rehabilitation Program.

For culvert improvements, use the proposed length measured along the centerline of the barrel regardless of the depth below grade. The measurement should be made between the inside faces of the top parapet or edge-stiffening beam of the top slab.

For substructure or channel work only, code the length of superstructure over, or supported by, the substructure or channel.

For substructure or channel work only, code the length of the superstructure over, or supported by, the substructure or channel.

Typically, a replacement bridge is longer than the existing bridge. Nationwide averages for the increase in bridge length with replacement as a function of the existing length are provided in Figure 76-1. The length-expansion factors represent data for the years 1981 to 1985. Where site-specific data is lacking, these factors are suggested for estimating the length of replacement bridges. For exceedingly long bridges (i.e., 300 meters or more), the length-expansion factor approaches 1.0.

EXCLUSIVE CODES: 000000 through 999999.

DATA REFERENCES: Office Records and Work Program.

EXAMPLES:		CODE
Length of Structure Improvement	76.2 meters	000762
	1,200.0 meters	012000
	12,345.0 meters	123450

INCREASED LENGTH OF REPLACED BRIDGES

Replaced Bridge Length = Existing Bridge Length X Length Expansion Factor

Location: Project Plan Tab - NBI Project Data or Work Tab –NBI Project Data

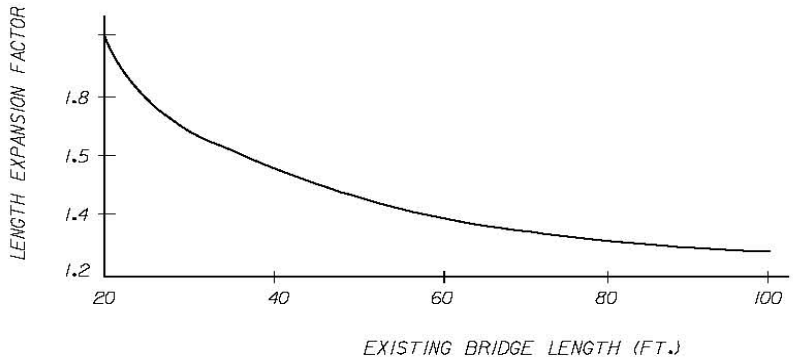

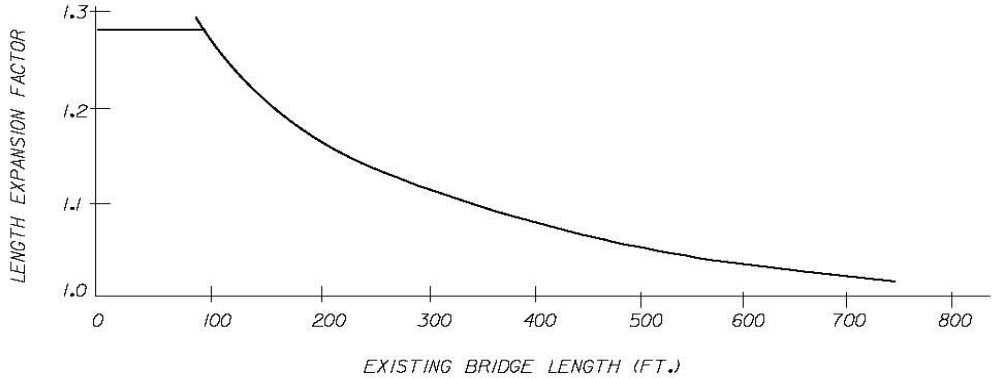

REPLACEMENT BRIDGE LENGTH = EXISTING BRIDGE LENGTH X LENGTH EXPANSION FACTOR
NTS

FIGURE 76-1

INSPECTION DATE (90)

Table: Inspevnt Field Name: lastinsp

Record the month, day and year that the last routine inspection of the structure was performed. This inspection date may be different from those recorded in Item 93-Critical Feature Inspection Date. Code as MM/DD/YYYY.

This is a required field for over-lane sign structures, high mast light poles and traffic signal mast arms.

EXCLUSIVE CODES: Numeric, date format MM/DD/YYYY

DATA REFERENCES: None.

EXAMPLES:

		CODE
Inspection date	November 15, 2012	11/15/2012
	March 14, 2013	03/14/2013

Location: Schedule Tab

DESIGNATED INSPECTION FREQUENCY (91)

Table: Inspevnt Field Name: brinspfreq

Code 2 digits to represent the number of months between designated inspections of the structure. Leading zeroes shall be coded. This interval is usually determined by the individual in charge of the inspection program. For posted, under strength bridges, this interval should be substantially less than the 24-month standard. The designated inspection interval could vary from inspection to inspection depending on the condition of the bridge at the time of inspection. Maximum inspection interval for bridges is established in the "Bridge and Other Structures Inspection and Reporting Manual", Topic No. 850-010-030,

It should be noted that bridges will also require special non-scheduled inspections after unusual events such as floods, earthquakes, fires or collisions. These special inspections may range from a very brief visual examination to a detailed in-depth evaluation depending upon the nature of the event. For example, when a substructure pier or abutment is struck by a vehicle, in most cases only a visual examination of the bridge is necessary. After major collisions or earthquakes, in-depth inspections may be warranted as directed by the engineer in charge of the program. After and during severe floods, the stability of the substructure of bridges may have to be determined by probing, underwater sensors or other appropriate measures. Under water inspection by divers may be required for some scour critical bridges immediately after floods. The inspection frequency coded in this item is to indicate the time frame of overall bridge inspection operation. If any interim inspection is needed on some structure features only, the inspection interval shall be coded in Item 92. This is a required field for over-lane sign structures, high mast light poles and traffic signal mast arms.

EXCLUSIVE CODES: Numeric

DATA REFERENCES:

"Bridge and Other Structures Inspection and Reporting Manual", Topic No. 850-010-030.

EXAMPLES:	CODE
Posted bridge with heavy truck traffic and questionable structural details which cause the overall bridge to be inspected each month.	01
Bridge is scheduled to be inspected every 24 months.	24

Location: Schedule Tab

CRITICAL FEATURE INSPECTION (92)

Code critical features that need special inspections or special emphasis during inspections and the designated inspection interval in months as determined by the individual in charge of the inspection program. The designated inspection interval could vary from inspection to inspection depending on the condition of the bridge at the time of inspection.

SEGMENT A - FRACTURE CRITICAL DETAILS AND INSPECTION INTERVAL

Table: Inspevnt Field Name: fcinspreq / fcinspfreq

This segment is used to identify whether the fracture critical inspection is needed or not. If fracture critical inspection is needed, check the box and enter the number of months between inspections.

SEGMENT B - UNDERWATER INSPECTION AND INSPECTION INTERVAL

Table: Inspevnt Field Name: uwinspreq / uwinspfreq

This segment is used to identify whether the underwater inspection is needed or not. If underwater inspection is needed, check the box and enter the number of months between inspections.

Special Note: If a bridge had a previous underwater inspection, but does not require an underwater for the current inspection (i.e. due to low water depth at the time of inspection), mark the underwater inspection as being performed and document in the inspection notes that an underwater inspection was not needed due to low water depth.

SEGMENT C - OTHER SPECIAL INSPECTION AND INSPECTION INTERVAL

Table: Inspevnt Field Name: osinspreq / oslastfreq

This segment is used to identify whether any other special inspection is needed or not. If other special inspection is needed, check the box and enter the number of months between inspections. Other special inspection may include movable structure inspection, questionable structure elements inspection, interim inspections due to posting or condition, accident inspections, inspections after

storm events, etc. (Note: Non periodic inspections such as accident or storm events will not have a requirement or frequency, so Segment 92C should not be coded in these cases.)

EXCLUSIVE CODES:

Every segment: Required Y/N , use check box. Frequency is numeric.

DATA REFERENCES:

Bridge Plans, Field Observations and "Bridge and Other Structures Inspection and Reporting Manual", Topic No. 850-010-030.

Location: Schedule Tab

CRITICAL FEATURE INSPECTION DATE (93)

Code only if the first position of segments A, B or C in Item 92A is coded "Y" for yes (box checked). Record the month, day and year that the last inspection of the denoted critical feature was performed as MM/DD/YYYY.

SEGMENT A - LAST INSPECTION DATE FOR FRACTURE CRITICAL INSPECTION

Table: Inspevnt Field Name: fclastinsp

This segment is used to record the last inspection date for fracture critical inspection.

SEGMENT B - LAST INSPECTION DATE FOR UNDERWATER INSPECTION

Table: Inspevnt Field Name: uwlastinsp

This segment is used to record the last inspection date for underwater inspection.

SEGMENT C - LAST INSPECTION DATE FOR OTHER SPECIAL INSPECTION

Table: Inspevnt Field Name: oslastinsp

This segment is used to record the last inspection date for any other special inspection.

EXCLUSIVE CODES: Numeric date format MM/DD/YYYY

DATA REFERENCES: "Bridge and Other Structures Inspection and Reporting Manual", Topic No. 850-010-030.

EXAMPLES: Structure has fracture critical members which were last inspected on March 12, 2012. It does not require underwater or other special feature inspections.

Item	Code
93A	03/12/2012
93B	01/01/1901
93C	01/01/1901

Structure has no fracture critical details, but requires underwater and has other special features (Ex: temporary support) for which the state requires special inspection. The last underwater inspection was done in April 14, 2012 and the last special feature inspection was done in November 3, 2013.

Item	Code
93A	01/01/1901
93B	04/14/2012
93C	11/03/2013

Location: Schedule Tab

BRIDGE IMPROVEMENT COSTS (94)

Table: Bridge Field Name: nbiimpscost

Code a 6 digit number to represent the cost of the proposed bridge or major structure improvements in thousands of dollars. This cost shall include only bridge construction costs, excluding roadway, right-of-way, detour, demolition, preliminary engineering, CEI, etc. Code the base year for the cost in Item 97-Year of Improvement Cost Estimate. Do not use this item for estimating maintenance costs.

This item must be coded for bridges eligible for the Highway Bridge Replacement and Rehabilitation Program.

Nationally, the deck area of replaced bridges is averaging 2.2 times the deck area before replacement. The deck area of rehabilitated bridges is averaging 1.5 times the deck area before rehabilitation. Widening square meter costs are typically 1.8 times the square meter cost of new bridges with similar spans. For example, if the average cost of a new bridge is $500 per square meter, the average cost of the widened area would be $900 per square meter. Each highway agency is encouraged to use its best available information and established procedures to determine bridge improvement costs.

EXCLUSIVE CODES: Numeric.

DATA REFERENCES:

Office of District Structures Maintenance Engineer.

EXAMPLES: CODE

Bridge Improvement Cost	$55,800	000056
	$250,000	000250
	$7,451,233	007451

Location: Project Plan Tab - NBI Project Data or Work Tab –NBI Project Data

ROADWAY IMPROVEMENT COST (95)

Table: Bridge Field Name: nbirwcost

Code a 6 digit number to represent the cost of the proposed roadway improvement in thousands of dollars. This shall include only roadway construction costs, excluding bridge, right-of-way, detour, extensive roadway realignment costs, preliminary engineering, etc. Do not use this item for estimating maintenance costs.

This item must be coded for bridges eligible for the Highway Bridge Replacement and Rehabilitation Program.

In the absence of a procedure for estimating roadway improvement costs, a guide of 10% of the bridge costs is suggested.

EXCLUSIVE CODES: Numeric.

DATA REFERENCES:
Office of District Structures and Facilities Engineer.

EXAMPLE:	CODE
The U.S. 27 bridge over the Suwannee River is going to be widened to four lanes and the approach roadway cost is $200,000.	000200

Location: Project Plan Tab - NBI Project Data or Work Tab –NBI Project Data

TOTAL PROJECT COST (96)

Table: Bridge Field Name: nbitotcost

Code a 6 digit number to represent the total project cost in thousands of dollars, including incidental costs not included in Item 94-Bridge Improvement Cost and 95-Roadway Improvement Cost. This item should include all costs normally associated with the proposed bridge improvement project. The Total Project Cost will therefore usually be greater than the sum of Items 94 and 95. Do not use this item for coding maintenance costs.

This item must be coded for bridges eligible for the Highway Bridge Replacement and Rehabilitation Program.

In the absence of a procedure for estimating the total project cost, a guide of 150% of the bridge cost is suggested.

EXCLUSIVE CODES: Numeric.

DATA REFERENCES:
Office of District Structures and Facilities Engineer.

EXAMPLE:	CODE
The U.S. 27 bridge over the Suwannee River is going to be widened to four lanes with a project total cost of $250,000 which includes roadway improvement cost and bridge construction cost.	000250

Location: Project Plan Tab - NBI Project Data or Work Tab –NBI Project Data

YEAR OF IMPROVEMENT COST ESTIMATE (97)

Table: Bridge Field Name: nbiyrcost

Record the year that the costs of work estimated in Item 94-Bridge Improvement Cost, Item 95-Roadway Improvement Cost, and Item 96-Total Project Cost were based upon. This date and the data provided for Item 94 through Item 96 must be current; that is, Item 97 shall be no more than 8 years old. Code the last 4 digits of the year so recorded. Coding is required for bridge eligible for Highway Bridge Repair and Rehabilitation Program. DATA REFERENCES:
Office of District Structures and Facilities Engineer.

EXAMPLES:		CODE
Year of Cost Estimate	1988 costs	1988
	2010 costs	2010

Location: Project Plan Tab - NBI Project Data

BORDER BRIDGE (98)

Use this item to indicate structures crossing borders of States. Code a 5 position number composed of two segments specifying the responsibility for improvements to the existing structure when it is shared with a neighboring state.

SEGMENT	DESCRIPTION	LENGTH
A	Border State Code	3 positions
B	Percentage Responsibility	2 positions

SEGMENT A - BORDER STATE (First through Third Positions)

Table: Bridge Field Name: nstatecode / n_fhwa_reg

Code the first three positions with the bordering state code. The adjoining state codes are as follows: 134-Georgia; 014-Alabama. If the structure is not on the state border, code as Not Applicable.

SEGMENT B - PERCENTAGE RESPONSIBILITY (Fourth and Fifth Positions)

Table: Bridge Field Name: bb_pct

Code the fourth and fifth positions with the percentage of total deck area of the existing bridge that the bordering state is responsible for funding. Code 99 if the neighboring state accepts 100 percent responsibility, but Florida still codes a record for the structure.

EXCLUSIVE CODES:
The first 3 positions must be 014,134 or 000. The last 2 positions must be numeric.

DATA REFERENCES:
Bridge Inspection and Maintenance Offices in Georgia and Alabama.

EXAMPLE:	CODE
A structure connects Florida with Alabama, and Alabama is responsible for funding 54 percent of future improvement costs.	01454

Location: Inventory Tab – ID/Admin (Screen 1 of 5)

BORDER BRIDGE STRUCTURE NUMBER (99)

Table: Bridge Field Name: bb_brdgeid

Code the neighboring state's 15 position National Bridge Inventory (NBI) structure number for any structure noted in Item A16-Border Bridge. This number must match exactly the neighboring state's submitted NBI structure number. The entire 15 position field must be accounted for including zeroes and blank spaces whether they are leading, trailing, or embedded in the 15 position field. If the neighboring State has 00% responsibility, and, if there is no NBI Structure Number in that State's inventory file, then the entire 15-digit field shall be coded zeroes. If the structure is not a border bridge, leave blank.

EXCLUSIVE CODES: None.

DATA REFERENCES:
Border State's Bridge Inspection and Maintenance Office.

EXAMPLE:	CODE
For the US-98 bridge over Perdido Bay, the state line between Florida and Alabama is in the middle of the bridge and Alabama has 54% of the responsibility. Florida's Bridge No. 480110, Alabama's No. 012386. Alabama codes the bridge number and left justifies the data.	012386

Location: Inventory Tab – ID/Admin (Screen 1 of 5)

DEFENSE HIGHWAY DESIGNATION (100)

Table: roadway Field Name: defhwy

This item shall be coded for all records in the inventory. This is a required field for over-lane sign structures, high mast light poles and traffic signal mast arms. For the inventory route identified in Item 5, indicate defense highway conditions using one of the following codes:

CODE	DESCRIPTION
0	The inventory route is not a STRAHNET highway.
1	The inventory route is on an interstate STRAHNET highway.
2	The inventory route is on a non-interstate STRAHNET highway
3	The inventory route is on a STRAHNET connector route.

EXCLUSIVE CODES: 0 through 2.

DATA REFERENCES:
Contact the Office of Transportation Statistics in the Tallahassee.

EXAMPLE:	CODE
Bridge on Interstate 10.	1

EDIT PROGRAM ERROR CHECK:
If Item 100 equals 1 or 2, Item 15-Latitude must be greater than 00000.

If Item 100 equals 1 or 2, Item 16-Longitude must be greater than 000000.

Location: Inventory Tab – Roads Window (Screen 3 of 5)

PARALLEL STRUCTURE DESIGNATION (101)

Code this item to indicate situations where separate structures carry the inventory route in opposite directions of travel over the same feature and record the parallel bridge number. (See Figure 101-1)

SEGMENT A - PARALLEL STRUCTURE DESIGNATION

Table Name: Bridge Field Name: paralstruc

This segment codes the designation of the structure in the bridge record that is being recorded.

CODE	DESCRIPTION
R	The right structure of parallel bridges carrying the roadway in the direction of the inventory. (For a defense highway, this is west to east and south to north).
L	The left structure of parallel bridges. This structure carries traffic in the opposite direction.
N	No parallel structure exists.

EXCLUSIVE CODES: R, L or N.

Location: Inventory Tab – Classification Window (Screen 5 of 5)

EXAMPLE:

In the Figure below Bridge 720013 would be coded L and Bridge 720010 would be coded R.

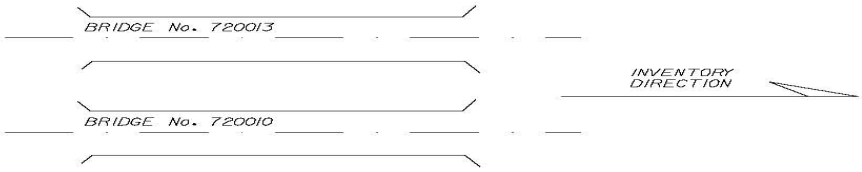

Figure 101 -1

DIRECTION OF TRAFFIC (102)

Table: Roadway Field Name: trafficdir

Code the direction of traffic of the inventory route identified in Item 5 as a 1 digit number using one of the codes below. This item must be compatible with other traffic-related items such as Item 28 Lanes On the Structure, Item 29-Average Daily Traffic, Item 47-Total Horizontal Clearances and Item 51-Bridge Roadway Width, Curb-to-Curb.
Bridges with deck width less than 18 feet have only one lane. That dimension should be used in conjunction with this item and Item 28-Lanes On and Under the Structure.

This is a required field for over-lane sign structures, high mast light poles and traffic signal mast arms.

CODE	DESCRIPTION
0	Highway traffic not carried.
1	1-way traffic.
2	2-way traffic.
3	One lane bridge for 2-way traffic.

EXCLUSIVE CODES: 0 through 3.

DATA REFERENCES: Field Observation.

EXAMPLE:	CODE
Interstate bridge (one bridge each direction)	1

Location: Inventory Tab - Roads Window (Screen 3 of 5)

TEMPORARY STRUCTURE DESIGNATION (103)

Table: Bridge Field Name: tempstruc

Code this item to indicate situations where temporary structures or conditions exist. This item should be coded "N" if not applicable.

CODE	DESCRIPTION
T	Temporary structure(s) or conditions exist.

Temporary structure(s) or conditions are those which are required to facilitate traffic flow. This may occur either before or during the modification or replacement of a structure found to be deficient. Such conditions include the following:

1. Bridges shored up, including additional temporary supports.
2. Temporary repairs made to keep a bridge open.
3. Temporary structures, temporary runarounds or bypasses.
4. Other temporary measures, such as barricaded traffic lanes to keep the bridge open.

Any repaired structure or replacement structure which is expected to remain in place without further project activity, other than maintenance, for a significant period of time shall not be considered temporary. Under such conditions that structure, regardless of its type, shall be considered the minimum adequate to remain in place and evaluated accordingly.

If this item is coded T, then all data recorded for the structure shall be for the condition of the structure without temporary measures, except for the following items which shall be for the temporary structure:

ITEM 10 - Inventory Route, Minimum Vertical Clearance
ITEM 41 - Structure Open, Posted, or Closed to Traffic
ITEM 47 - Inventory Route, Total Horizontal Clearance
ITEM 53 - Minimum Vertical Clearance Over Bridge Roadway
ITEM 54 - Minimum Vertical Under Clearance
ITEM 55 - Minimum Lateral Under Clearance on Right
ITEM 56 - Minimum Lateral Under Clearance on Left
ITEM 70 - Bridge Posting

Note: If the permanent structure is closed to traffic while a temporary structure is in place then Items 64 and 66 should be coded 0.0 tons.

EXCLUSIVE CODES: T or N.
Location: Inventory Tab – Classification Window (Screen 5 of 5)

HIGHWAY SYSTEM OF THE INVENTORY ROUTE (104)

Table: Roadway Field Name: nhs_ind

This item is to be coded for all records in the inventory. For the inventory route identified in Item 5, indicate whether the inventory route is on the National Highway System (NHS) or not on the system. This is a required field for over-lane sign structures, high mast light poles and traffic signal mast arms. Use one of the following codes:

CODE	DESCRIPTION
0	Inventory Route is not on the NHS.
1	Inventory Route is on the NHS.

EXCLUSIVE CODES: 0 and 1.

DATA REFERENCES: National Highway System Maps.

Location: Inventory Tab - Roads Window (Screen 3 of 5)

FEDERAL LANDS HIGHWAY (105)

Table: Roadway Field Name: fedlandhwy

Structures owned by state and local jurisdictions on roads which lead to and traverse through federal lands sometimes require special unique identification because they are eligible to receive funding from the Federal Lands Highway Program. This is a required field for over-lane sign structures, high mast light poles and traffic signal mast arms.

EXCLUSIVE CODES	DESCRIPTION
0	Not applicable
1	Indian Reservation Road (IRR)
2	Forest Highway (FH)
3	Land Management Highway System (LMHS)
4	Both IRR and FH
5	Both IRR and LMHS
6	Both FH and LMHS
9	Combined IRR, FH and LMHS

EXCLUSIVE CODES: 0 through 6 and 9.

EXAMPLE:	CODE
Indian Reservation Road (IRR)	1

Location: Inventory Tab - Roads Window (Screen 3 of 5)

YEAR RECONSTRUCTED (106)

Table: Bridge Field Name: yearrecon

Record and code the year of reconstruction of the structure. Code all 4 digits of the latest year in which reconstruction of the structure was completed. If there has been no reconstruction, code 0. This is a required field for over-lane sign structures, high mast light poles and traffic signal mast arms.

For a bridge to be defined as reconstructed, the type of work performed, whether or not it meets current minimum standards, must have been eligible for funding under any of the federal aid funding categories. The eligibility criteria would apply to the work performed regardless of whether all state or local funds or federal aid funds were used.

Some types of work **NOT** to be considered as reconstruction are listed:

- Safety feature replacement or upgrading (for example, bridge rail, and approach guardrail or impact attenuators).
- Painting of structural steel.
- Overlay of bridge deck as part of a larger highway surfacing project (for example, overlay carried across bridge deck for surface uniformity without additional bridge work).
- Utility work.
- Emergency repair to restore structural integrity to the previous status following an accident.
- Retrofitting to correct a deficiency which does not substantially alter physical geometry or increase the load-carrying capacity.
- Work performed to keep a bridge operational while plans for complete rehabilitation or replacement are under preparation (for example, adding a substructure element or extra girder).

EXCLUSIVE CODES: 0000 through 9999.

DATA REFERENCES: District Construction Records.

EXAMPLE:	CODE
Reconstruction Completed 1970	1970

Location: Inventory Tab – ID/Admin (Screen 1 of 5)

DECK STRUCTURE TYPE (107)

Table: Bridge Field: dkstructyp

Record the type of deck system on the bridge. If more than one type of deck system is on the bridge, code the most predominant. Code N for a filled culvert or arch with the approach roadway section carried across the structure. Use one of the following codes:

EXCLUSIVE CODE	DESCRIPTION

1	Concrete Cast-in-Place
2	Concrete Precast Panels
3	Open Grating
4	Closed Grating
5	Steel plate (includes orthotropic)
6	Corrugated Steel
7	Aluminum
8	Wood or Timber
9	Other
N	Not applicable

Location: Inventory Tab - Design Window (Screen 2 of 5)

WEARING SURFACE/PROTECTIVE SYSTEM (108)

This item is used to identify the superstructure deck system. This item refers to the deck system for the entire bridge, and is not limited to the main span. The total quantity of the deck structure and the total quantity of the deficient deck structure are also recorded in this item when the structure is inspected. Information about deck material, forming system and composite or non-composite action should be considered. In general, composite action occurs when beams or forms are connected to the deck with shear connectors or stirrups. If multiple deck systems are used, then the most predominant (frequent) system will be coded in this item. Code "9" for a filled culvert or arch with the approach roadway section carried across the structure. The coding is divided into three segments for entering data.

SEGMENT A - TYPE OF WEARING SURFACE

Table: Bridge Field Name: dksurftype

EXCLUSIVE CODES	DESCRIPTION
1	Monolithic Concrete (concurrently placed with structural deck)
2	Integral Concrete (separate non-modified layer of concrete added to structural deck)
3	Latex Concrete or similar additive
4	Low Slump Concrete
5	Epoxy Overlay
6	Bituminous
7	Wood or Timber
8	Gravel
9	Other
0	None (no additional concrete thickness or wearing surface isincluded in the bridge deck)
N	Not Applicable (applies only to structures with no deck)

SEGMENT B - TYPE OF MEMBRANE

Table: Bridge Field Name: dkmembtype

EXCLUSIVE CODES	DESCRIPTION
1	Built-up
2	Preformed Fabric
3	Epoxy
8	Unknown
9	Other
0	None
N	Not Applicable (applies only to structures with no deck)

SEGMENT C - DECK PROTECTION

Table: Bridge Field Name: dkprotect

EXCLUSIVE CODES	DESCRIPTION
1	Epoxy Coated Reinforcing
2	Galvanized Reinforcing
3	Other Coated Reinforcing
4	Cathodic Protection
6	Polymer Impregnated
7	Internally Sealed
8	Unknown
9	Other
0	None
N	Not Applicable (applies only to structures with no deck)

Location: Inventory Tab - Design Window (Screen 2 of 5)

AVERAGE DAILY TRUCK TRAFFIC (109)

Table: Roadway Field Name: truckpct

Code a 2 digit percentage that shows the percentage of Item 29C4-Average Daily Traffic that is truck traffic. Do not include vans, pickup trucks and other light delivery trucks in this percentage.

If this information is not available, an estimate which represents the average percentage for the category of road carried by the bridge may be used. Leave zeroes if Item 29C4-Average Daily Traffic is not greater than 100.

EXCLUSIVE CODES: 00 through 99.

DATA REFERENCES:

The District Office of Planning and Programs can provide this data for state owned bridges. For local government bridges, contact either the city or county engineer.

EXAMPLES:		CODE
Average Daily Traffic	7% trucks	07
	12% trucks	12

Location: Inventory Tab - Roads Window (Screen 3 of 5)

DESIGNATED NATIONAL NETWORK (110)

Table: Roadway Field Name: trucknet

The national network for trucks includes most of the Interstate System and those portions of the Federal-Aid Highways identified in the Code of Federal Regulations (23 CFR 658). The national network for trucks is available for use by commercial motor vehicles of the dimensions and configurations described in these regulations. This is a required field for over-lane sign structures, high mast light poles and traffic signal mast arms. For the inventory route identified in Item 5, indicate conditions using one of the following codes:

CODE	DESCRIPTION
0	Inventory route is not part of the national network for trucks.
1	The inventory route is part of the national network for trucks.

EXCLUSIVE CODES: 0 or 1.

DATA REFERENCES:

The Office of Transportation Statistics in Tallahassee can be contacted for explanation and clarification of route status.

EXAMPLES:	CODE
U.S. 27 at Mayo	0
U.S. 27 at Gainesville	1

Location: Inventory Tab - Roads Window (Screen 3 of 5)

PIER OR ABUTMENT PROTECTION (FOR NAVIGATION) (111)

Table: Inspevnt Field Name: pierprot

If Item 38-Navigation Control has been coded “1", (a bridge has navigation control), use the codes below to indicate the presence and adequacy of pier or abutment protection features such as fenders, dolphins, etc.

The condition of the protection devices may be a factor in the overall evaluation of Item 60-Substructure. If Item 38-Navigation Control has been coded O or N, code "N" in this item, to indicate not applicable.

EXCLUSIVE CODES	DESCRIPTION
1	Navigation protection not required.
2	In place and functioning.
3	In place but in a deteriorated condition.
4	In place but reevaluation of design suggested.
5	None present but reevaluation suggested.
N	Not Applicable

EXCLUSIVE CODES: 1 through 5 or N.

DATA REFERENCES: Field Observations.

EXAMPLE:	CODE
New bridge structure with fender system.	2

Location: Appraisal Tab – Other Ratings Window (Screen 1 of 2)

NBIS BRIDGE LENGTH (112)

Table: Bridge Field Name: nbislen

This item is used to signify whether the structure meets or exceeds the minimum length specified to be designated as a bridge for National Bridge Inspection Standards. (See Figures 112-1 and 112-2.) In addition non bridge structures (such as over lane sign structures, high mast light poles, retaining walls not attached to a bridge, fishing piers, traffic signal mast arms, etc.) should be coded ‘N’ for this item. This is a required field for over-lane sign structures, high mast light poles and traffic signal mast arms. The following definition of a bridge is to be used:

> *A structure including supports erected over a depression or an obstruction, such as water, highway, or railway, and having a track or passageway for carrying traffic or other moving loads, and having an opening measured along the center of the roadway of more than 6.1 meters between undercopings of abutments or spring lines of arches, or extreme ends of openings for multiple boxes; it may also include multiple pipes, where the clear distance between openings is less than half of the smaller contiguous opening.*

CODE	DESCRIPTION
Y	Yes
N	No

EXCLUSIVE CODES: Y or N.
DATA REFERENCES: Bridge Plans or Field Observations.

Location: Inventory Tab – Classification Window (Screen 5 of 5)

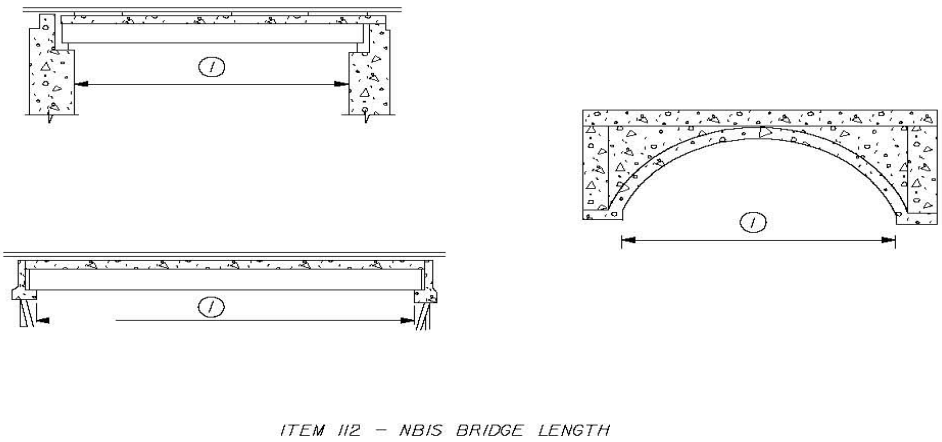

① Item 112 - NBIS Bridge Length

Figure 112-1

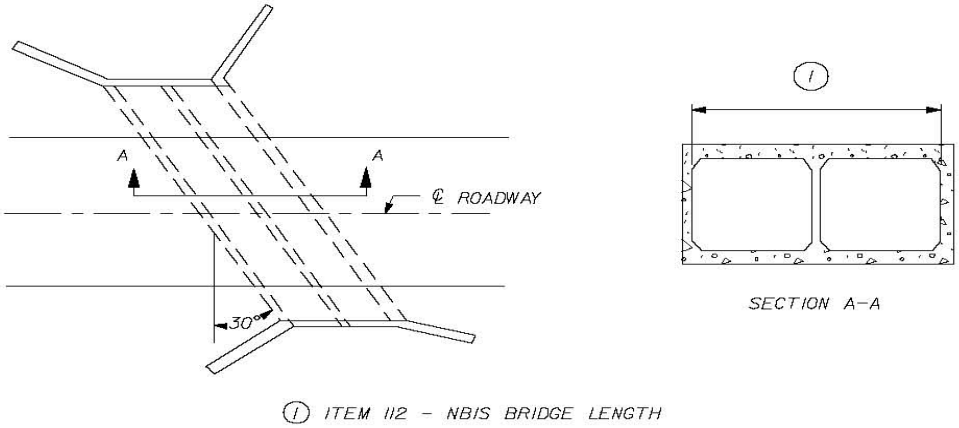
A
A
℄ ROADWAY
30°
1
SECTION A–A
1 ITEM 112 – NBIS BRIDGE LENGTH

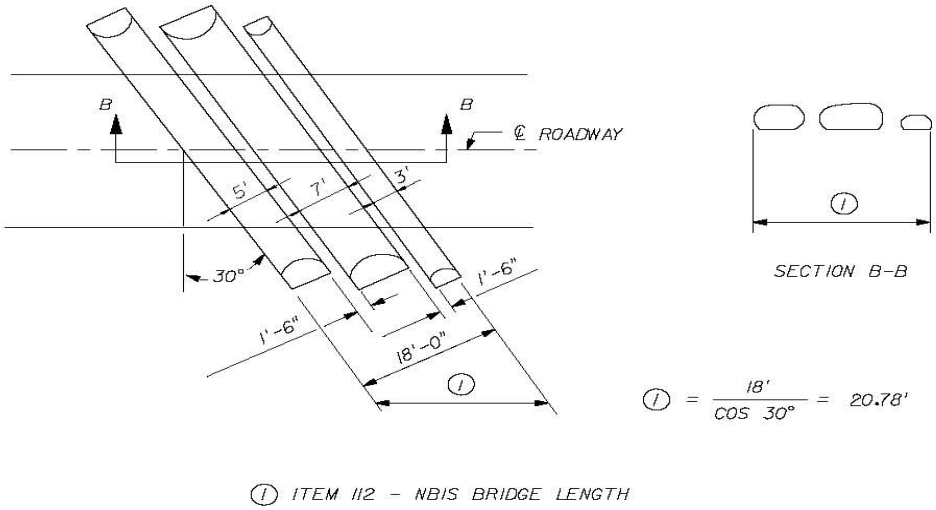
B
B
℄ ROADWAY
5'
7'
3'
30°
1'-6"
1'-6"
18'-0"
1
SECTION B–B
1 = 18' / COS 30° = 20.78'
1 ITEM 112 – NBIS BRIDGE LENGTH

Figure 112-2

SCOUR CRITICAL (113)

Table Name: Inspevnt Field Name: scourcrit

Use a single position code as indicated below to identify the current status of the bridge regarding its vulnerability to scour. The scour calculations/analysis and field inspections for this determination shall be made by hydraulic/foundation engineers. Details on conducting a scour analysis are included in the FHWA Technical Advisory entitled, "Scour at Bridges". Whenever a rating factor of 4 or below is determined for this item, the rating factor for Item 60- Substructure may need to be revised to reflect the severity of actual scour and resultant damage to the bridge. For foundations on rock where scour cannot be calculated, use the coding most descriptive of site conditions. A scour critical bridge is one with abutment or pier foundations which are rated as unstable due to: (1) observed scour at the bridge site, or (2) a scour potential as determined from a scour evaluation study.

After the state screening process, bridges having reasonably risk-free or low-risk foundations, then the scour analysis is not required. Item 113 will be coded "8". Each district is encouraged to differentiate in his NBI data files between "screened" low-risk foundation structures and those determined to be stable for the calculated scour above the top of footing condition.

Note: All new state bridges are designed for scour and local governments are required to be designed for scour according to "Manual of Uniform Minimum Standards for Design, Construction and Maintenance for Streets and Highways" (commonly referred to as the Florida Greenbook). Topic 625-000-015. Therefore new bridges should be assigned a low risk code and codes 6 and T shall not be used unless it is determined that the new bridge was not designed for scour. These bridges shall be analyzed for scour as quickly as possible so that codes can be properly assigned.

CODE	DESCRIPTION
N	NOT APPLICABLE - Bridge not over waterway.
U	UNKNOWN FOUNDATION - Bridge with “unknown” foundation that has not been evaluated for scour. Since risk cannot be determined, flag for monitoring during flood events and if appropriate, closure. This code shall not be used for interstate bridges. Use code 6 instead.
T	TIDAL, LOW RISK - Bridge over “tidal” waters that has not been evaluated for scour, but considered low risk. Bridge will be monitored with regular inspection cycle and with appropriate underwater inspections. (“Unknown” foundations in “tidal” waters should be coded “U”.)
9	ON DRY LAND - Bridge foundations (including piles) on dry land well above flood water elevations.
8	STABLE ABOVE FOOTING - Bridge foundations determined to be stable for assessed or calculated scour conditions. Scour is determined to be above top of footing (Example A, Figure 113-1) by assessment (i.e. bridge foundations are on rock formations that have been determined to resist scour

within the service life of the bridge) by calculation or by installation of properly designed countermeasures.

7	COUNTERMEASURES - Countermeasures have been installed to correct a previously existing problem with scour and to reduce the risk of bridge failure during a flood event. Instructions contained in a plan of action have been implemented to reduce the risk to users from a bridge failure during or immediately after a flood event.
6	CALCS NOT MADE - Scour calculation/evaluation has not been made. (Use only to describe case where bridge has not yet been evaluated for scour potential.)
5	STABLE W/IN FOOTING - Bridge foundations determined to be stable for assessed or calculated scour conditions or by installation of properly designed countermeasures; scour within limits of footing or piles. (Example B, Figure 113-1)
4	STABLE, NEEDS ACTION - Bridge foundations determined to be stable for calculated scour conditions; field review indicates action is required to protect exposed foundations from effects of additional erosion and corrosion.
3	SC - UNSTABLE - Bridge is scour critical; bridge foundations determined to be unstable for calculated scour conditions: - Scour within limits of footing or piles. (Example B, Figure 113-1) - Scour below spread-footing base or pile tips. (Example C, Figure 113-1)
2	SC - EXTENSIVE SCOUR - Bridge is scour critical; field review indicates that extensive scour has occurred at bridge foundations. Immediate action is required to provide scour countermeasures.
1	SC - FAIL IMMINENT - Bridge is scour critical; field review indicates that failure of piers/abutments is imminent. Bridge is closed to traffic.
0	SC - BRIDGE FAILED - Bridge is scour critical. Bridge has failed and is closed to traffic.

EXCLUSIVE CODES: 0 through 9 or N, T, or U.

DATA REFERENCES:

Data should be acquired from either field observations or measured scour depths or calculated scour depth supplied by Scour Evaluations.

Location: Appraisal Tab – Other Ratings Window (Screen 1 of 2)

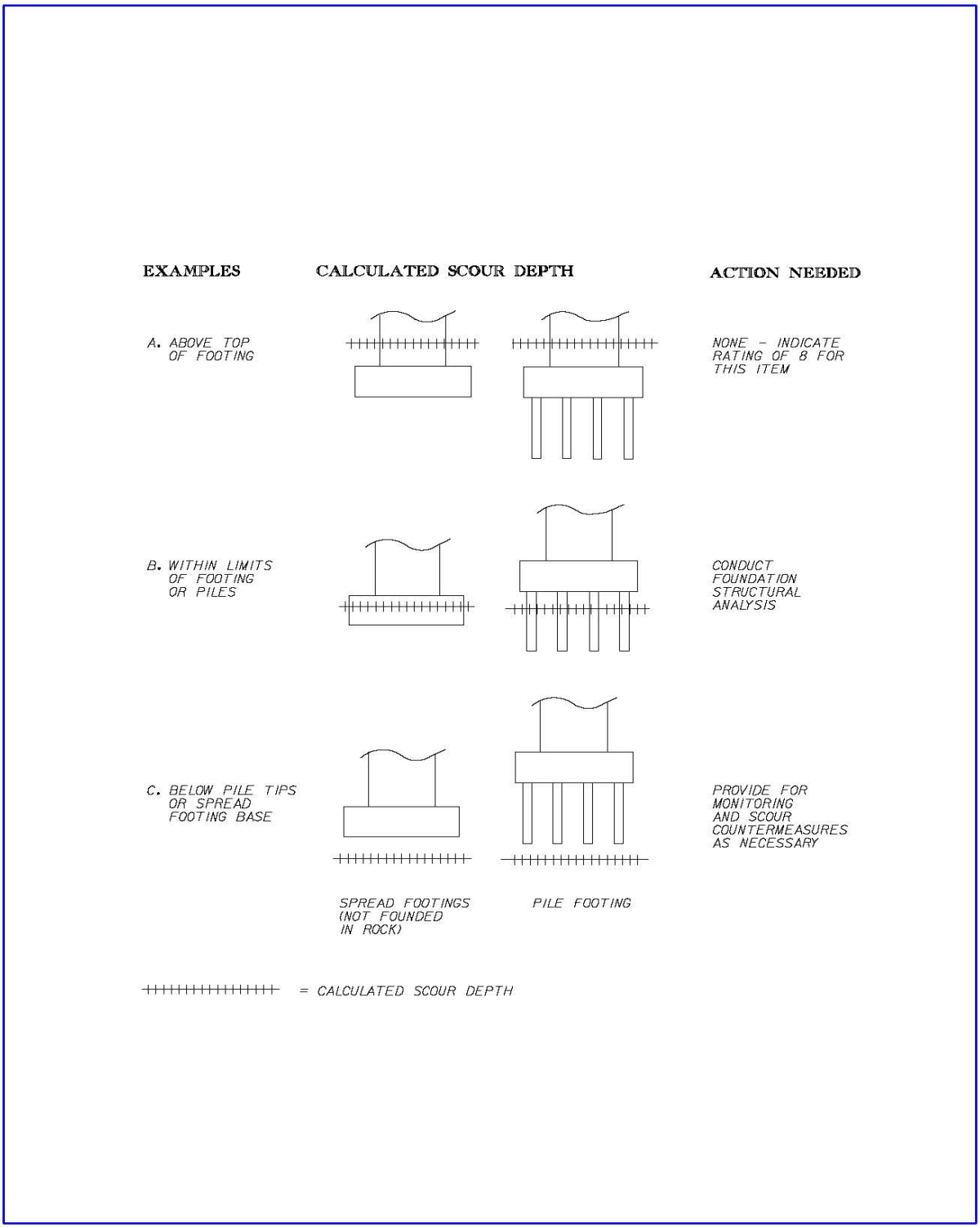
EXAMPLES
CALCULATED SCOUR DEPTH
ACTION NEEDED
A. ABOVE TOP OF FOOTING
NONE - INDICATE RATING OF 8 FOR THIS ITEM
B. WITHIN LIMITS OF FOOTING OR PILES
CONDUCT FOUNDATION STRUCTURAL ANALYSIS
C. BELOW PILE TIPS OR SPREAD FOOTING BASE
PROVIDE FOR MONITORING AND SCOUR COUNTERMEASURES AS NECESSARY
SPREAD FOOTINGS (NOT FOUNDED IN ROCK)
PILE FOOTING
= CALCULATED SCOUR DEPTH

Figure 113 - 1

FUTURE AVERAGE DAILY TRAFFIC (114)

Table: Roadway Field Name: adtfuture

Code for all bridges the forecasted average daily traffic (ADT) for the inventory route identified in Item 5-Inventory Route. This shall be projected at least 17 years but no more than 22 years from the year data is submitted to the NBI. The intent is to provide a basis for a 20-year forecast. This item may be updated anytime, but must be updated when the forecast falls below the 17-year limit. If planning data is not available, use the best estimate based on site familiarity.

The future ADT must be compatible with the other items coded for the bridge. For example, parallel bridges with an open median are coded as follows: If Item 28-Lanes on and Under the Structure and Item 51-Bridge Roadway Width, Curb-to-Curb are coded for each bridge separately, then the future ADT must be coded for each bridge separately (not the total for the route).

EXCLUSIVE CODES: 000000 through 999999.

DATA REFERENCES:

Data should be attained from the District Planning Office or the local government.

EXAMPLES:		CODE
Future ADT	540	000540
	15,600	015600
	240,000	240000

Location: Inventory Tab - Roads Window (Screen 3 of 5)

YEAR OF FUTURE AVERAGE DAILY TRAFFIC (115)

Table: Roadway Field Name: adtfutyear

Code the last 4 digits of the year represented by the future ADT in Item 114-Future Average Daily Traffic. The projected year of future ADT shall be at least 17 years but no more than 22 years from the year data is submitted to the NBI.

DATA REFERENCES:

Data should be attained from the District Planning Office or the local government.

EXAMPLE:	CODE
Year of Future ADT is 2008	2008

Location: Inventory Tab - Roads Window (Screen 3 of 5)

MINIMUM VERTICAL LIFT CLEARANCE (116)

Table Name: Bridge Field Name: lftbrnavcl

Record and code as a 4 digit number truncated to the tenth of a foot, the minimum vertical clearance imposed at the site as measured above a datum that is specified on a navigation permit issued by a control agency. Code this item only for vertical lift bridges in the dropped or closed position.

EXCLUSIVE CODES: 0000 through 9999.

DATA REFERENCES: Bridge Plans and Field Measurements.

EXAMPLES:		CODE
Vertical Clearance:	30.67 feet	0306
	54.22 meters	0542

Location: Appraisal Tab – Other Ratings Window (Screen 1 of 2)

This page is intentionally left blank.

PART 2

NON NATIONAL BRIDGE INVENTORY (NBI) DATA ITEMS

This page is intentionally left blank.

APPRAISAL TAB - OTHER RATINGS (SCREEN 1 OF 2)

NBI Appraisal Ratings - calculated

SUFFICIENCY RATING PREFIX AND SUFFICIENCY RATING

Table Name: Inspevnt Field Names: suff_prefx and suff_rat

These fields are calculated by pushing the sufficiency rating button on the condition tab screen. These fields are updated by using the sufficiency rating button, which should be used for each inspection, and after any inventory data has changed which may affect the sufficiency rating. For information about the sufficiency ratings refer to the "Recording and Coding Guide for the Structure Inventory and Appraisal of the Nation's Bridges". An asterisk in the sufficiency rating prefix indicates that some of the data required to calculate the sufficiency rating is missing and default values have been assumed to calculate the sufficiency rating.

SD/FO STATUS

Table Name: Inspevnt Field Name: nbi_rating

This item signifies if the structure is structurally deficient, functionally obsolete or not deficient. This field is calculated when the sufficiency ratings button is pushed.

CODE	VALUE
0	Not Deficient
1	Structurally Deficient
2	Functionally Obsolete

HEALTH INDEX

View: V_hix Field Name: hix

This field is automatically calculated and based on the condition states of the elements associated with the appropriate inspection event. The Department does not currently use this field.

APPRAISAL TAB – LOAD RATINGS (SCREEN 2 OF 2)

NBI Load Ratings:

RATING DATE

Table Name: Bridge Field Name: ratingdate

This field should be coded with the date the load rating for the structure was performed. It should be coded in the format: mm/dd/yyyy – example 01/14/1963. If this is unknown, leave blank.

INITIALS

Table Name: Bridge Field Name: rater_ini

This field should be coded with the initials of the professional engineer who signed the load ratings. If this is unknown leave blank.

Alternate Load Ratings:

ALT. OPERATING TYPE

Table: Bridge Field Name: altormeth

This field is not currently used by the Department.

ALT. INVENTORY TYPE

Table: Bridge Field Name: altirmeth

This field is not currently used by the Department

ALT. OPERATING RATING

Table: Bridge Field Name: altorload

This field is not currently used by the Department.

ALT. INVENTORY RATING

Table: Bridge Field Name: altirload

This field is not currently used by the Department.

Posting Loads by Truck Type:

TRUCK TYPE 1

Table Name: Bridge Field Name: truck1or and truck1ir

This field is not currently used by the Department.

TRUCK TYPE 2

Table Name: Bridge Field Name: truck2or and truck2ir

This field is not currently used by the Department

TRUCK TYPE 3

Table Name: Bridge Field Name: truck3or and truck3ir

This field is not currently used by the Department.

LOAD RATING REVIEW REQUIRED

Table Name: Bridge Field Name: req_op_rat

This field is not currently used by the Department.

INVENTORY TAB - **ID/ADMIN (SCREEN 1 OF 5)**

NAME:

Table Name: Bridge Field Name: strucname

This is a 50 character field for putting the name of the bridge. The priority for using this field is as follows:

1. A Florida Legislature designated name.
2. The name on the bridge barrier.
3. The local name for the structure.
4. Other name the District may wish to use.

AGENCY BRIDGE GROUP

This field is entered on the Schedule Tab, and is just shown on this screen as reference.

AGENCY ADMIN. AREA

Table Name: Bridge Field Name: adminarea

This field will be used if the bridge is located in a metropolitan planning area. This is a required field for over-lane sign structures, high mast light poles and traffic signal mast arms.

CODE	VALUE
00	Not located in designated area
01	Lee County (TMA)
02	Sarasota-Manatee County (TMA)
03	Jacksonville (TMA)
04	Pensacola (TMA)
05	Broward County (TMA)
06	Palm Beach County (TMA)
07	Volusia County (TMA)
08	Brevard County (TMA)
09	Orlando (TMA)
10	Miami-Dade County (TMA)
11	Not Used
12	Tallahassee-Leon County (MPO)
13	Charlotte County-Punta Gorda (MPO)
14	Polk County (MPO)
15	Hernando County (MPO)
16	Naples-Collier County (MPO)
17	Gainesville (MPO)
18	Pasco County (TMA)
19	St. Lucie County (MPO)
20	Martin County (MPO)
21	Indian River County (MPO)
22	Ocala--Marion County (MPO)
23	Fort Walton Beach (MPO)
24	Panama City (MPO)
25	Hillsborough County (TMA)
26	Pinellas County (TMA)

INVENTORY TAB - DESIGN (SCREEN 2 OF 5)

Span Information:

DECK AREA

Table: Bridge Field Name: deck_area

Code the deck area of the bridge.

TOTAL LENGTH

Table: Bridge Field Name: tot_length

Code the total length of the structure including approach roadways, this length must be equal to or greater than the structure length. If work is being done on the structure, this field may be used to code the total length of the project.

INVENTORY TAB - ROADS (SCREEN 3 OF 5)

Roadway Identification:

ROAD/ROUTE NAME

Table: Roadway Field Name: roadway_name

This is a 30 character field for the name of the roadway for the inventory route.

NBI ROADWAY

Table: Roadway Field Name: nbi_rw_flag

Check box if this roadway field is to be included in the NBI export tape.

Traffic and Accidents:

MEDIANS

Table: Roadway Field Name: num_median

Code the number of medians on the structure. Do not confuse this field with Bridge Median (33) which describes the type of median on the structure.

SPEED

Table: Roadway Field Name: road_speed

Enter the posted speed limit for the inventory route.

ADT CLASS

Table: Roadway Field Name: adtclass

This field is automatically updated based on the ADT of the inventory route.

DETOUR SPEED

Table: Roadway Field Name: det_speed

Enter the estimated average speed of the detour route.

ACCIDENT COUNT

Table: Roadway Field Name: acc_count

This field is not used at the current time.

ACCIDENT RATE

Table: Roadway Field Name: acc_rate

This field is not used at the current time.

Alternate Classifications:

SCHOOL BUS ROUTE

Table: Roadway Field Name: school_bus

Check this box if the inventory route is known to be a school bus route.

TRANSIT ROUTE

Table: Roadway Field Name: transit_rt

Check this box if the inventory route is known to be a transit route.

CRITICAL TRAVEL ROUTE

Table: Roadway Field Name: crit_trav

Check this box if the inventory route is known to be a critical travel route such as an emergency evacuation route.

Agency Roadway Fields:

These fields are not used.

INVENTORY TAB - STRUCTURE UNITS (SCREEN 4 OF 5)

Structure Unit Information:

UNIT ID

Table Name: Structure_unit Field Name: strunitlabel

Required identifier to distinguish the spans of a structure from each other in reports. Span 0 is the NBI main span group, span 1 is the NBI approach span group, and any other spans are numbered sequentially.

DESCRIPTION

Table Name: Structure_unit Field Name: strunitdescription

Name or other short text identification of the span. Usually "Main" or "Approach", but agencies may establish conventions to make it easy to identify spans in reports, such as "T-beam span" or "North span". This is a required field for over-lane sign structures, high mast light poles and traffic signal mast arms.

TYPE

Table Name: Structure_unit Field Name: strunittype

Code this field with the type of structure unit using the following table. This is a required field for over-lane sign structures, high mast light poles and traffic signal mast arms and should be coded as main span.

Code	Value
A	Approach
F	Frame
M	Main Span
O	Other

DEFAULT BRIDGE UNIT

Table Name: Structure_unit Field Name: defaultflag

Default flag. If this box is checked then this is the default structure unit for the structure. If it is the default, then new elements are assigned to this structure unit.

INVENTORY TAB - **DESIGN (SCREEN 5 OF 5)**

FRACTURE CRITICAL DETAILS

Table: Bridge Field Name: fc_detail

Description: This is a non-NBI field used to characterize the fracture-critical details on the structure. Fracture Critical Details - In 1988, a revision to the National Bridge Inspection Standards mandated all states to identify bridges that had fracture critical members and perform in-depth investigations of those members. By definition, fracture critical members are steel elements sustaining tensile stresses whose failure will probably cause a portion of or the entire bridge to collapse. This field will be used to identify the reason a bridge is fracture critical as well as identifying fatigue prone details which are not necessarily fracture critical.

Code	Description
A	one or two steel-girder systems
B	hinges with pin and hanger assemblies
C	steel bent caps sustaining tensile stresses
D	steel trusses
E	steel tension elements consisting of less than 3 multiple eye-bars
F	suspension or cable structures
G	single and multiple cell steel box girders
H	highly fatigue prone weld details in tension areas
I	high strength steel girders
J	horizontally curved girders
K	details that promote out-of-plane bending (staggered cross frames, etc.)
L	electroslag welding fabrication procedures
M	partial length welded cover plates
N	exposed prestress tendons
O	super/sub integral framing details (floor beam/stringers)
P	tied arches

System: The four fields here are used for simulations and modeling. Inspectors should not code these fields.

Agency Bridge Items: FDOT does not use these fields.

SCHEDULE TAB

Summary:

INSPECTOR

Table: Inspevnt Field Name: inspusrkey

This is a 4 character field which identifies the lead inspector.

PRIMARY TYPE

Table: Inspevnt Field Name: insptype

Exclusive Code	Description
1	Regular NBI
4	Special
A	Interim Inspection
B	Underwater - Wading/Probing Depth
C	Underwater - State Force SCUBA
D	Underwater - Contract SCUBA
E	Underwater - Hyperbaric Diving
F	Underwater - Inspection Not Done Due To Low Water
G	Fracture Critical
L	Special - Accident Damage (traffic)
M	Special - Natural Disaster Damage (flood, storm)
N	Special - Posted Bridge
O	Special – Other
P	Special – Movable
Q	Regular NBI with Movable
_	Unknown or Not Applicable or Missing

REVIEW REQUIRED

Table: Inspevnt Field Name: rev_req

Check this box if review is required.

INSPECTION GROUP

Table: Inspevnt Field Name: inspectcontrolid

FDOT does not use this field

Types of Inspection Performed:

NATIONAL BRIDGE INVENTORY

Table: Inspevnt Field Name: nbinspdone

Flag to indicate that an NBI inspection was completed as a part of this inspection event.

ELEMENT

Table: Inspevnt Field Name: elinspdone

Flag to indicate that an element inspection was completed as a part of this inspection event.

FRACTURE CRITICAL

Table: Inspevnt Field Name: cinspdone

Flag to indicate that a fracture critical inspection was completed as a part of this inspection event.

UNDERWATER

Table: Inspevnt Field Name: uwinspdone

Flag to indicate that an underwater inspection was completed as a part of this inspection event.

Special Note: If a bridge had a previous underwater inspection, but does not require an underwater for the current inspection (i.e. due to low water depth at the time of inspection), mark the underwater inspection as being performed and document in the inspection notes that an underwater inspection was not needed due to low water depth.

OTHER SPECIAL

Table: Inspevnt Field Name: osinspdone

Flag to indicate that a special inspection was completed as a part of this inspection event.

Schedule:

NBI

Table: Inspevnt Field Name: nbnextdate

The next scheduled routine inspection is entered in this field.

ELEMENT

Table: Inspevnt Field Name: elnextdate

The next scheduled CoRe element inspection is entered in this field.

FRACTURE CRITICAL

Table: Inspevnt Field Name: fcnextdate

The next scheduled fracture critical inspection is entered in this field.

UNDERWATER

Table: Inspevnt Field Name: uwnextdate

The next scheduled underwater inspection is entered in this field.

OTHER SPECIAL

Table: Inspevnt Field Name: osnextdate

The next scheduled other special (movable, etc.) inspection is entered in this field.

Bridge Inspection Resources:

NEXT INSPECTOR

Table: Inspevnt Field Name: nextinspid

Pontis automatically fills in this field by copying the user key of the person doing the current inspection. An inspector may change this assignment on the inspection scheduling tab.

BRIDGE GROUP

Table: Inspevnt Field Name: bridgegroup

If this bridge is in a bridge group select the group from the drop down table. Bridge groups are used to group bridges for a specific inspection contract. This field for should be coded for over-lane sign structures, high mast light poles and traffic signal mast arms if the structure is part of a bridge group.

CREW HOURS

Table: Inspevnt Field Name: crewhrs

This field in an estimate of the total number of hours of topside inspectors to inspect the structure.

FLAGGER HOURS

Table: Inspevnt Field Name: flaggerhrs

This field is an estimate of the total number of hours of traffic control labor required to conduct a regular inspection on the structure.

HELPER HOURS

Table: Inspevnt Field Name: helperhrs

This field is not used by the Department.

SNOOPER HOURS

Table: Inspevnt Field Name: snooperhrs

This field is an estimate of the total number of hours of special access equipment required to conduct a regular inspection on the structure.

SPECIAL CREW HOURS

Table: Inspevnt Field Name: spcrewhrs

This field is an estimate of the total number of underwater inspector crew hours required to conduct a regular inspection on the structure.

SPECIAL EQUIP HOURS

Table: Inspevnt Field Name: spequiphrs

This field is an estimate of the total number of hours of underwater equipment required to conduct a regular inspection on the structure.

BRIDGE - ADD ON APPLETS - FDOT BRIDGE RELATED INFORMATION

MISCELLANEOUS BRIDGE (Tab 1 of 5)

PARALLEL BRIDGE SEQ

Table: Userbrdg Field Name: pbrdgseq

If the structure has a parallel structure, code the last 4 digits of the parallel bridge. If there is no parallel structure leave blank.

CHANNEL DEPTH

Table: Userbrdg Field Name: chandepth

Code the normal depth of the channel in the main part of the channel.

RADIO FREQUENCY

Table: Userbrdg Field Name: radfreq

Code the channel used by the moveable bridge control house. If the structure is not a movable bridge, leave blank.

PHONE NUMBER

Table: Userbrdg Field Name: phonenum

Code the telephone number for the moveable bridge control house. If the structure is not a movable bridge, leave blank.

EXCEPTION DATE

Table: Userbrdg Field Name: xcptdate

If the Federal Highway Administration has granted an exception to design standards, for the use of federal bridge funds on the structure code the date the exception was granted.

EXCEPTION TYPE

Table: Userbrdg Field Name: xcpttype

Code the Exception Type granted by the Federal Highway Administration.

EXCLUSIVE CODE	DESCRIPTION
-1	Unknown
01	Bridge Railing
02	Lane Widths
03	Shoulder Widths
04	Bridge Width
05	Structural Capacity
06	Vertical Clearance
07	Vertical Alignment
08	Horizontal Clearance
09	Horizontal Alignment
10	Design Speed
11	Stopping Sight Distance
12	Cross Slope
13	Superelevation
14	Grades

ACCEPTED BY CONSTRUCTION

Table: Userbrdg Field Name: acpt_maint_dt

Code the date the structure was accepted by construction. This should be in the mm/dd/yyyy format. This field should be updated if the structure is reconstructed and is to be used on state projects only.

BRIDGE RAIL 1

Table: Userbrdg Field Name: brgrail1

Code the most predominant type of bridge rail from the following list.

This item is used to indicate the most frequent or numerous type of bridge railing. The total quantity of the bridge railing is also recorded in this item. The field is divided into two segments for entering the data.

SEGMENT A - FIRST TYPE BRIDGE RAILING (First Position)
DEN - BRGRAIL1 DEFAULT – N

This segment indicates the first type of bridge railing and shall be coded using one of the following codes:

EXCLUSIVE CODES	DESCRIPTION
	CONCRETE
A	Post and Beam
B	Jersey Type Barrier
C	Barrier with protection screen or opaque visual screen
D	Sidewalk Barrier
E	Bicycle Barrier
F	Parapet-Aluminum-Handrail
G	With Curb and Aluminum Rail
	STEEL
H	Guardrail/Concrete Post
I	Guardrail/Steel Post
J	Guardrail/Timber Post
K	Channels/Angles
L	Barrier
	TIMBER
M	Post and Rail
	OTHER
P	Combination not Defined
O	Other
N	Not Applicable (No Railing)
@	Unknown

BRIDGE RAIL 2

Table: Userbrdg Field Name: brgrail2

This segment indicates the second type of bridge railing and shall be coded using one of the codes for Bridge Rail 1.

ELECTRICAL DEVICES

Table: Userbrdg Field Name: typeelec

Coding of this item signifies whether or not the **fixed bridge** needs electric service for lighting, traffic control devices, warning signal lights, navigation lights, etc. For movable bridge, code this item with "2". This is a required field for over-lane sign structures, high mast light poles and traffic signal mast arms.

EXCLUSIVE CODES	DESCRIPTIONS
0	No electric service at structure
1	Roadway lighting only
2	Traffic control system only
3	Navigation lights only
4	Navigation clearance lights only
5	Channel lights only
6	Fender lights only
7	Aerial lights only
8	Any combination of values 1-7
9	Other type of electric service
@	Unknown

CULVERT TYPE

Table: Userbrdg Field Name: culvtype

This item is used if the structure is a bridge culvert.

EXCLUSIVE CODES	DESCRIPTION
A	Cast-in-place concrete box culvert
B	Precast concrete box culvert
C	Precast concrete arch culvert
D	Cast-in-place concrete arch culvert
E	Cast-in-place concrete frame (no bottom)
F	Precast Concrete Frame (no bottom)
G	Concrete Pipe
H	Steel Pipe
I	Elliptical Steel Pipe
J	Elliptical Aluminum Pipe
K	Aluminum Box
L	Steel Plate Arch
M	Aluminum Plate Arch
O	Other
N	Not Applicable
@	Unknown

MAINTENANCE YARD

Table: Userbrdg Field Name: mainyard

The maintenance area in which the structure is located should be coded in accordance with the 3 digit number which identifies the District Maintenance Area Number. This is a required field for over-lane sign structures, high mast light poles and traffic signal mast arms. If the Department does not maintain the structure, then code “000".

EXCLUSIVE CODES	DESCRIPTION
-1	Unknown
000	Not FDOT maintained
190	Bartow Operations
191	Heartland Operations
192	Ft. Myers Operations
193	LaBelle
194	Sarasota Operations
195	Arcadia
238	Heavy Bridge Crew
291	Gainesville
292	Lake City
293	Perry
294	Jacksonville
296	Chiefland
297	St. Augustine
300	D3 Contract
390	Ponce de Leon Operations
391	Panama City Operations
392	Midway Operations
393	Marianna
395	Milton Operations
438	D4 Heavy Bridge Crew
439	D4 In House Contract
440	D4 External Contract
490	Ft. Pierce
491	Ft. Lauderdale
496	West Palm Beach
590	Cocoa
591	DeLand
592	Leesburg
593	Oviedo Sub-Yard
594	Orlando
595	Ocala
610	D6 Asset Maint
638	D6 In House Contract
690	South Dade
691	North Dade
692	Marathon Sub-Yard
693	D6 Movable AM
796	Tampa
798	Brooksville
799	Pinellas
801	Turnpike MP 0-100 & Sawgrass Expressway
802	Turnpike MP 100-200
803	Turnpike MP 200-308, Beeline and East-West Expressway
804	Seminole & Southern Connector Expressway
805	Veteran’s Expressway
806	Polk Parkway

FIHS ON/OFF

Table: userbrdg Field Name: fihs_rte_cd

Code this item according to whether or not the route on or under the structure is on the Florida Intrastate Highway System (FIHS). In the case where there are multiple routes on the structure, if any route on the structure is on the FIHS then the on route is considered to be on the FIHS. In the case where there are multiple routes under the structure, if any route under the structure is on the FIHS then the under route is considered to be on the FIHS.

Code	Description
1	On-Route Only on FIHS
2	Under-Route Only on FIHS
3	On & Under Route on FIHS
4	No Routes on FIHS

PREVIOUS STRUCTURE

Table: userbrdg Field Name: prv_brdg_txt

If there was a previous structure number for this site, code the 6 digit number, otherwise leave blank. In the case where the previous structure number was greater than 6 digits, do not use this field. Instead make a note of the previous structure number in the structure notes field. Sign Structures and High Mast Light Poles may have had structure numbers greater than 6 digits prior to when these structures were entered into Pontis. This is a required field for over-lane sign structures, high mast light poles and traffic signal mast arms if known. It is possible that the previous structure number for an over-lane sign structure or high mast light pole may contain more that 6 digits, in that case leave this field blank and show the previous structure number in the structure notes.

SECOND PREVIOUS STRUCTURE

Table: userbrdg Field Name: scnd_prev_struct_id

If there was a 2nd previous structure number for this structure, code the 6 digit number, otherwise leave blank. Follow the same guidelines as above.

RELATED FINPROJ NUMBER

Table: userbrdg Field Name: rlt_finproj_id

Code the project/permit number that the structure was originally built under. If done by FDOT financial project, use all 11 characters with no dashes. Do not change if structure under goes rehabilitation. Intention is to capture project/permit that structure was originally built under.

PERFORMANCE RATING

Table: userbrdg Field Name: strct_perf_rate_cd

This field is auto-calculated and non-editable. It is based on the lowest rating for Deck, Superstructure and Substructure, where 8-9 = Excellent, 6-7 = Good, 5 = Fair, 4 or below = Poor. For culverts, the rating is based on the Culvert Rating. For tunnels, superstructure is not considered. Not applicable for ancillary structures.

REPLACEMENT STRUCTURE

Table: userbrdg Field Name: repl_strct_id

If the structure is scheduled for replacement, enter the new 6 digit structure number, otherwise leave blank.

MAST ARM LOCATION

Table: userbrdg Field Name: mst_arm_cd

Coding of this field indicates whether or not the mast arm is located within the mast arm boundary limit map (where the Department requires mast arms for traffic signals).

EXCLUSIVE CODE	DESCRIPTION
N	Structure is not a traffic signal mast arm
2	Mast arm is inside the mast arm boundary
4	Mast arm is outside the mast arm boundary
U	Structure is a mast arm, but status is unknown

MAST ARM MANAGING AGENCY ID

Table: userbrdg Field Name: mst_arm_agcy_id

Record the managing agency id structure number if it exists. For example, you may enter the number that a local government agency uses to identify the structure if different from the FDOT designation. This number is used to cross reference with the local agency.

HS20 GOVERNING SPAN LENGTH

Table: userbrdg Field Name: govsplgt

This item is used to record the governing bridge longitudinal span length for operating rating for the HS20 truck for load ratings determined by AS, LF or load test and the FL120 truck for load ratings determined by LRFR. The governing span length is coded in feet and tenths of feet. If the governing span length is greater than 999.0 feet, code "999.9". For Truss members, code the corresponding length of span which acts on the truss member. For structures where there is no longitudinal rating code -1.

LOAD RATING ORIGINATION

Table: userbrdg Field Name: operorig

Code the type of bridge plans that were used to perform the load rating. This is a drop down table, select from the following choices:

EXCLUSIVE CODE	DESCRIPTION
@	Unknown
A	Design Plans
B	As Builts
C	Field Measurements

LOAD RATING DATE – (AS BID)

Table: userbrdg Field Name: ldratdat

Enter the date the “as bid” (90% plans) was approved. Format mm/dd/yyyy.

METHOD OF CALCULATION

Table: userbrdg Field Name: methcalc

Code the method used to calculate the live load distribution factor

EXCLUSIVE CODE	DESCRIPTION
1	AASHTO Formula
2	SALOD
3	BRUFEM
4	Others
5	Refined Analysis*
6	Refined Analysis* for Governing Span/AASHTO for Maximum Span
7	Refined Analysis* for Maximum Span/AASHTO for Governing Span
-1	Unknown

*** When the distribution factors are obtained using a refined analysis, contact the State Load Rating Engineer with the bridge number and supply a copy of the load rating summary form.**

LOAD DISTRIBUTION FACTOR

Table: userbrdg Field Name: loaddistb

The live load distribution factor for operating rating and the method of calculation will be recorded in this item. The distribution factor is coded to represent the number of wheel lines (half axle) which are distributed to a girder, stringer, truss line or a one foot wide section of deck slab to the nearest one thousandth. For structures under fill, such as culvert, tunnel, code "0.0".

IMPACT FACTOR

Table: userbrdg Field Name: impfactr

This item is used to record the impact factor for the load rating analysis. The item is coded in percentage. For example if the impact factor is 20.7% enter 20.7.

DESIGN METHOD

Table: userbrdg Field Name: suprdesm

The method of calculation for the design of the superstructure will be coded in this segment. The description of the code is as follows:

CODE	DESCRIPTION
@	Unknown
A	Working Stress
B	Load Factor
C	LRFD (Load Resistance Factor Design)
D	Other

DESIGN MEASURE

Table: userbrdg Field Name: suprdess

This field indicates the units of measure of the design plans.

CODE	DESCRIPTION
@	Unknown
A	English
B	System Internationale

RECOMMENDED SINGLE UNIT TRUCK

Table: userbrdg Field Name: sintrkwt

This field is used to code the recommended weight for posting for a single unit truck. If posting is not required code 99.

RECOMMENDED COMBINATION UNIT TRUCK

Table: userbrdg Field Name: comtrkwt

This field is used to code the recommended weight for posting for a combination vehicle. If posting is not required code 99.

RECOMMENDED TANDEM TRUCK

Table: userbrdg Field Name: comtrwt

This field is used to code the recommended weight for posting for a tandem trailer vehicle. If posting is not required code 99.

SINGLE TRUCK 2 AXLES

Table: userbrdg Field Name: sintrk2

This field is used to code the operating rating for an SU2 vehicle to the nearest tenth of a ton. When the SU2 rating has not been calculated code -1.

SINGLE TRUCK 3 AXLES

Table: userbrdg Field Name: sintrk3

This field is used to code the operating rating for an SU3 vehicle to the nearest tenth of a ton. When the SU3 rating has not been calculated code -1.

SINGLE TRUCK 4 AXLES

Table: userbrdg Field Name: sintrk4

This field is used to code the operating rating for an SU4 vehicle to the nearest tenth of a ton. When the SU4 rating has not been calculated code -1.

COMBINATION TRUCK 3 AXLES

Table: userbrdg Field Name:comtrk3

This field is used to code the operating rating for a C3 vehicle to the nearest tenth of a ton. When the C3 rating has not been calculated code -1.

COMBINATION TRUCK 4 AXLES

Table: userbrdg Field Name: comtrk4

This field is used to code the operating rating for a C4 vehicle to the nearest tenth of a ton. When the C4 rating has not been calculated code -1.

COMBINATION TRUCK 5 AXLES

Table: userbrdg Field Name: comtrk5

This field is used to code the operating rating for a C5 vehicle to the nearest tenth of a ton. When the C5 rating has not been calculated code -1.

TRUCK TRAILER 5 AXLES

Table: userbrdg Field Name: comtrktr

This field is used to code the operating rating for a tandem trailer vehicle (ST5) to the nearest tenth of a ton. When the ST5 rating has not been calculated code -1.

POSTING WEIGHT

Table: userbrdg Field Name: weight

This field is used to code the weight the bridge is posted if it is posted for a gross vehicle weight, if the bridge is not coded for a gross vehicle weight code 99.

POSTING SINGLE UNIT

Table: userbrdg Field Name: sintrkwt_oper

This field is used to code the actual weight the bridge is posted for a single unit truck. If the bridge is not posted for a single unit truck using the silhouette, then code 99. (Note for State Maintained Bridges the actual posting should equal the recommended posting level.)

POSTING COMBINATION

Table: userbrdg Field Name: comtrkwt_oper

This field is used to code the actual weight the bridge is posted for a combination truck. If the bridge is not posted for a combination truck using the silhouette, then code 99. (Note for State Maintained Bridges the actual posting should equal the recommended posting level.)

POSTING TANDEM TRUCK

Table: userbrdg Field Name: comtrwt_oper

This field is used to code the actual weight the bridge is posted for a tandem trailer truck. If the bridge is not posted for a tandem trailer truck using the silhouette, then code 99. (Note for State Maintained Bridges the actual posting should equal the recommended posting level.)

GOV FB SPAN

Table: userbrdg Field Name: gov_flrbem_spn_num

For Structures with floor beams code the span of the floor beam which provides the controlling HS20 or FL120 operating rating of any floor beam to the nearest tenth of a foot. Code this even if the floor beam rating is not the controlling rating for the entire structure. For structures with no floor beams code 0.0.

GOV FB SPACING

Table: userbrdg Field Name: gov_flrbem_spc_num
For structures with floor beams code the spacing of the floor beams for the controlling floor beam. For structures with no floor beams code 0.0.

FB HS20 RATING

Table: userbrdg Field Name: hs_rtegvflrbem_num

For structures with floor beam code the HS 20 operating rating for the controlling floor beam to the nearest tenth of a ton. For structures with no floor beams code 0.0. For structures with floor beams where the HS 20 rating has not been calculated code -1.

FB SU4 RATING

Table: userbrdg Field Name: su_rtegvflrbem_num

For structures with floor beams code the SU4 operating rating for the controlling floor beam to the nearest tenth of a ton. For structures with no floor beams code 0.0. For structures with floor beams where the SU4 rating has not been calculated code -1.

FB PRESENT

Table: userbrdg Field Name: flr_beam_prsnt_cd

This is a drop down table, select from the following options:

- Yes – code if floor beams are present
- No- Code if floor beams are not present

FB INV RATING FACTOR

Table: userbrdg Field Name: fb_invnt_fctr_num

For structures with floor beams where the load rating has been calculated using the LRFR method code the inventory rating factor to the nearest thousandth for the controlling floor beam based on the HL93 design load. When the load rating was not calculated using the LRFR method code -1. If no floor beams are present code 0.0

FB OPR RATING FACTOR

Table: userbrdg Field Name: fb_oper_fctr_num

For structures with floor beams where the load rating has been calculated using the LRFR method code the operating rating factor to the nearest thousandth for the controlling floor beam based on the HL93 design load. When the load rating was not calculated using the LRFR method code -1. If no floor beams are present code 0.0

FB FL 120

Table: userbrdg Field Name: fb_fl_120_num

For structures with floor beams where the load rating has been calculated with the LRFR method code the operating rating for the FL120 vehicle in tons to the nearest tenth of a ton for the controlling floor beam. When the load rating was not calculated using the LRFR method code -1. If no floor beams are present code 0.0.

FL 120 LONG GOV SPAN

Table: userbrdg Field Name: longrate_fl_120_num

When the structure has been load rated by the LRFR method code the controlling longitudinal operating rating in tons to the nearest tenth of a ton for the FL120 vehicle. If the structure was not load rated using the LRFR method code -1.

FL 120 TRANS

Table: userbrdg Field Name: trnvsratefl120_num

When the structure has been load rated by the LRFR method and there is a non floor beam transverse rating (such as for a segmental bridge) code the transverse operating for the FL120 vehicle to the nearest tenth of a ton. If the structure was not load rated using the LRFR method code -1.

SINGLE AXLE TRANS

Table: userbrdg Field Name: singl_axl_trnvs_num

For segmental bridges code the transverse operating rating for a single axle to the nearest tenth of a ton. If the structure is not a segmental bridge code -1.

TANDEM AXLE TRANS

Table: userbrdg Field Name: tand_axl_trnvs_num

For segmental bridges code the transverse operating rating for a tandem axle to the nearest tenth of a ton. If the structure is not a segmental bridge code -1.

WING SPAN

Table: userbrdg Field Name: wing_span_num

For segmental bridges code the maximum length of the deck cantilever portion of the segmental box to the nearest hundredth of a foot. This distance should be measured from the exterior face of the web to the curb line. If the structure is not a segmental bridge code -1.

WEB TO WEB SPAN

Table: userbrdg Field Name: webtoweb_span_num

For segmental bridges code the maximum length of the deck between the webs to the nearest hundredth of a foot. This distance should be measured between the interior faces of the web. If the structure is not a segmental bridge code -1.

HS20 OPR RATING MAX SPAN

Table: userbrdg Field Name: hs20_max_span_num

Code the HS 20 longitudinal operating rating for the maximum span to the nearest tenth of a ton. For structures load rated using the LRFR method code -1.

FL 120 LONG MAX SPAN

Table: userbrdg Field Name: max_span_fl120_num

Code the FL 120 longitudinal operating rating for the maximum span to the nearest tenth of a ton for structures load rated using the LRFR method. For structures not load rated using the LRFR method code -1.

PILE DRIVING RECORD

Table: userbrdg Field Name: scrpile

This item is used to record the availability of pile driving records for the structure.

EXCLUSIVE CODES	DESCRIPTION
@	Unknown
!	Not Applicable
Y	Pile driving records are available for all piles
P	Pile driving records are available for a portion of the piles.
N	No pile driving records are available.

FOUNDATION TYPE

Table: userbrdg Field Name: scrfndst

This item is used to record whether or not the foundation type is known.

EXCLUSIVE CODES	DESCRIPTION
@	Unknown
K	The foundation type and length of piles are known
U	The foundation type is unknown, or the length of the piles is unknown.

MODE OF FLOW

Table: userbrdg Field Name: scrmode

This item is used to record the mode of flow for the subject structure.

EXCLUSIVE CODES	DESCRIPTION
@	Unknown
!	Not applicable
R	Riverine
M	Tidal/Riverine
T	Tidal

RATING SCOUR EVALUATION

Table: userbrdg Field Name: scrrating

This item is used to record the highest phase of the scour evaluation process completed.

EXCLUSIVE CODES	DESCRIPTION
@	Unknown
!	Not applicable
1	Low Risk - Low
2	Low Risk - Medium
3	Low Risk - High
4	Scour Susceptible - Low
5	Scour Susceptible - Medium
6	Scour Susceptible - High
7	Scour Critical
8	Minimal Risk - Notes: Bridge with NBI item 113 coded "U" (Unknown Foundation) and a Lifetime Risk Cost < $15,000 based on Unknown Foundation Procedural Manual.
9	Low Risk Unknown - Notes: Bridge with NBI item 113 coded "U" (Unknown Foundation), and a Lifetime Risk Cost > $15,000, and foundation determined to be Low Risk by calculations performed based on Unknown Foundation Procedural Manual.
A	High Risk Unknown – Note: Bridge classified as scour critical with a Lifetime Risk Cost > $15,000

HIGHEST SCOUR EVALUATION PERFORMED

Table: userbrdg Field Name: higheval

This item is used to record the highest phase of the score evaluation process completed.

EXCLUSIVE CODES	DESCRIPTION
@	Unknown
!	Not Applicable
0	No phase of the scour evaluation process has been completed.
1	Phase I of the scour evaluation process has been completed.
2	Phase II of the scour evaluation process has been completed.
3	Phase III of the scour evaluation process has been completed.
4	Phase IV of the scour evaluation process has been completed.
5	Low Risk per NCHRP 107. POA (Plan of Action) completed.
6	Low Risk. POA (Plan of Action) implemented.
7	Unknown foundation classified as scour critical and POA completed.
8	Unknown foundation classified as scour critical and POA implemented.

See Notes on next page.

Notes: Codes 5 and 6 are for bridges with unknown foundations determined to be low risk using the NCHRP 107 formulas. POA (Plan of Action) completed means that a POA has been created but not signed by the bridge owner. POA implemented means that the owner has accepted the POA.

SCOUR RECOMMENDATION I

Table: userbrdg Field Name: evalrec

This item is used to record the first recommendation based on the scour evaluation process.

EXCLUSIVE CODES	DESCRIPTION
@	Unknown
!	Not Applicable
1	Perform a Phase I Evaluation
2	Perform a Phase II Evaluation
3	Perform a Phase III Evaluation
4	Perform a Phase IV Evaluation
5	Stop scour evaluations. Bridge assigned to Low Risk category.
6	Perform additional monitoring
7	Perform scour countermeasures
8	Scour countermeasures performed
N	No recommendation

SCOUR RECOMMENDATION II

Table: userbrdg Field Name: evalrec

This item is used to record the second recommendation based on the scour evaluation process. If there are less than 2 recommendations code “no recommendation”.

EXCLUSIVE CODES	DESCRIPTION
@	Unknown
!	Not Applicable
1	Perform a Phase I Evaluation
2	Perform a Phase II Evaluation
3	Perform a Phase III Evaluation
4	Perform a Phase IV Evaluation
5	Stop scour evaluations. Bridge assigned to Low Risk category.
6	Perform additional monitoring
7	Perform scour countermeasures
8	Scour countermeasures performed
N	No recommendation

SCOUR RECOMMENDATION III

Table: userbrdg Field Name: evalrec

This item is used to record the third recommendation based on the scour evaluation process. If there are less than 3 recommendations code “no recommendation”.

EXCLUSIVE CODES	DESCRIPTION
@	Unknown
!	Not Applicable
1	Perform a Phase I Evaluation
2	Perform a Phase II Evaluation
3	Perform a Phase III Evaluation
4	Perform a Phase IV Evaluation
5	Stop scour evaluations. Bridge assigned to Low Risk category.
6	Perform additional monitoring
7	Perform scour countermeasures
8	Scour countermeasures performed
N	No recommendation

SCOUR ELEVATION

Table: userbrdg Field Name: critelev

This item is used to record the elevation at which the structure will become unstable due to scour. The first position should be a minus for those elevations below sea level. If the structure is not classified as scour critical this item should be coded as “999".

ACTION ELEVATION

Table: userbrdg Field Name: actnelev

This item is used to record the scour elevation the District Scour Evaluation Team believes warrant reevaluation of the scour potential and/or structural stability of the structure. Where a scour critical elevation has been determined, the action elevation will generally be an elevation higher than the scour critical elevation. If this item is not applicable code “999".

STORM FREQUENCY

Table: userbrdg Field Name: strmfreq

This item is used to record the return frequency of the storm that will initiate an additional monitoring or inspection. If additional monitoring is not required then code “999".

WARRANTY

Table: userbrdg Field Name: undr_wrnt_cd

This item is used to track whether or not there is a construction warranty for this structure. This is a drop down table, select from the following options:

- Yes – if there is a warranty in place for this structure
- No- if a warranty is not in place for this structure

EXPIRATION DATE

Table: userbrdg Field Name: wrnt_expir_dt

If there is a warranty for this structure code the date the warranty expires in the mm/dd/yyyy format. If there is no warranty code 00/00/0000.

COMMENTS

Table: userbrdg Field Name: wrnt_cm

Enter a description of the warranty in this field.

Appendix A - Coding New Structures in Pontis

Please Note: When the proposed structure is under traffic (may include phased construction conditions) the structure shall be moved to the active district and all of the data items listed below shall be complete.

NBI ITEM #	DESCRIPTION	CODE INSTRUCTIONS
2	**District**	**09=Central Office**
3	County	
6a	Feature Intersected	
7	Facility Carried	
9	Location	
42a	Type Service On	
42b	Type Service Under	
21	Custodian	
22	Owner	
11	Mile Point	Route On Structure
		Route Under Structure (if applicable)
13a	LRS Inventory Route	Route On Structure
		Route Under Structure (if applicable)
49	Structure Length	
41	**Open, Posted, Closed**	**F=Proposed**
52	Deck Width	
26	Functional Class	Route On Structure
		Route Under Structure (if applicable)
43a	Main Span Material	If known
43b	Main Span Design	If known
N/A	Previous Structure #	if a replacement project
48	Max Span Length	If known
54a and 54b	Min Vertical Under Clr	If known
63	Operating Type	If known
64	Operating Rating	If known
65	Inventory Type	If known
66	Inventory Rating	If known
112	NBIS Bridge Length	Meets/Does Not Meet
FDOT Bridge Related Load Rating Tab 1	All items on this tab See below	If known
FDOT Bridge Related Load Rating Tab 2	All items on this tab See below	If known

Appendix A - Continued

These fields should also be completed in the Pontis FDOT Bridge Related Applet.

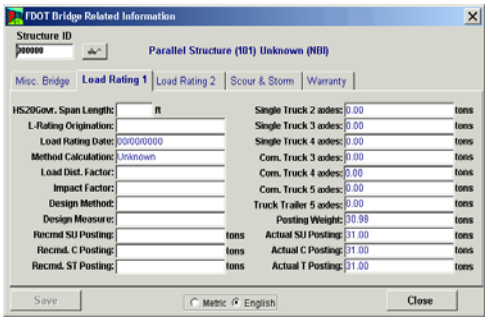

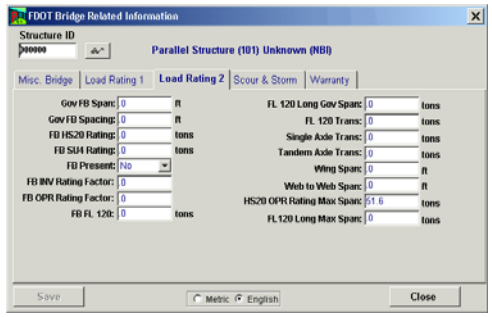

Appendix B - Required Data for Over Lane Sign Structures, High Mast Light Poles and Traffic Signal Mast Arms

NBI Items	Title	Comments
1	FIPS State/Region	12 - Region 4 Atlanta
2	District	
3	County	
4	Place Code	
5A	Record Type	Under Route(s) only. On-Route needs to be deleted
5B	Route Signing Prefix	
5C	Designated Level of Service	
5D	Route Number	
5E	Directional Suffix	
6	Feature Intersected	
8	NBI Structure Number	
9	Location	
10	Vertical Clearance	(minimum vertical distance from roadway to structure) - FOR SIGNS 99.99 - FOR POLES 0000- FOR TRAFFIC SIGNAL MAST ARMS
11	Milepoint	
12	National Base Network	
13A	LRS Inventory Route	
16	Latitude	FOR TRAFFIC SIGNAL MAST ARMS use vertical member containing structure number
17	Longitude	FOR TRAFFIC SIGNAL MAST ARMS use vertical member containing structure number
20	Toll Facility	
21	Maintenance Responsibility	
22	Owner	
26	Functional Class	
27	Year Built	If known
28	Lanes	See “Note:” under NBI Item 28 in manual for detailed instructions
42A	Type of Service On	"Overhead Sign" , "High Mast Light Pole" ,”Traffic Signal Mast Arm”
42B	Type of Service Under	"Highway" or appropriate value
43A	Main Span Material	
43B	Main Span Design	"Sign - Cantilever","Sign - Span","Sign - Butterfly","Sign - Cable","High Mast Light" , “Traffic Signal Mast Arm”
47	Horizontal Clearance	Refer to Coding Guide and treat SIGNS like a bridge 99.99 - FOR POLES (unless unusual circumstance) 0000 – FOR TRAFFIC SIGNAL MAST ARMS
49	Structure Length	Code 0.000 – this will be recorded on the element
51	Roadway Width	Code 0.0
53	Vertical Clearance Over Structure	99.99 (unless unusual circumstance)
54A	Under (Reference)	"Highway Beneath Struc" - FOR SIGNS AND TRAFFIC SIGNAL MAST ARMS "Feature not Hwy or RR" - FOR POLES
54B	Vertical Clearance Under Structure	(minimum vertical distance from roadway to structure) - FOR SIGNS 0000 - FOR POLES AND TRAFFIC SIGNAL MAST ARMS (unless unusual circumstance)
55A	Lateral Underclearance (Reference)	"Highway Beneath Struc" - FOR SIGNS AND TRAFFIC SIGNAL MAST ARMS "Feature not Hwy or RR" - FOR POLES
55B	Right Side Lateral Underclearance	(distance from travel lane edge to nearest right obstruction) - FOR SIGNS 000 - FOR POLES AND TRAFFIC SIGNAL MAST ARMS
56	Left Side Lateral Underclearance	(distance from travel lane edge to nearest left obstruction) - FOR SIGNS 000 - FOR POLES AND TRAFFIC SIGNAL MAST ARMS

Continued on the following page

Appendix B – Continued

59	Superstructure	See Table 59-5 in BMS Coding Guide
60	Substructure	See Table 60-2 in BMS Coding Guide
90	Inspection Date	
91	Inspection Frequency	24 Months FOR SIGNS 60 Months FOR POLES AND TRAFFIC SIGNAL MAST ARMS
100	Defense Highway	
102	Direction of Traffic	
104	National Highway System	
105	Federal Lands Highway	
106	Year Reconstructed	
110	Truck Network	
112	NBI Bridge Length	N - Does not meet NBI Length
Non NBI Items		
	Structure Name	
	Description	
	Type	
	Administration Area	
	Previous Structure Number (if applicable)	
	Electrical Devices	
	Maintenance Yard	
	Structure Unit	Code as Main
	Bridge Group	If applicable

Appendix C - Additional Sign Coding Instructions

SPAN SIGN STRUCTURES	Item 28A	Item 28B	Item 55A	Item 55B	Item 56	Item 10	Item 42B	Item 54A	Item 54B
Over 1 Traffic Direction	0	# Lanes Under Structure	H	Actual Measurement	Actual Measurement	Actual Measurement	1 (highway)	H	Actual Measurement
Over All Lanes (Both Directions No Barrier in Median)	0	# Lanes On Route Being Inventoried	H	Actual Measurement	999	Actual Measurement	1 (highway)	H	Actual Measurement
Over All Lanes (Both Directions With Barrier in Median)	0	# Lanes On Route Being Inventoried	H	Actual Measurement	Actual Measurement to Barrier	Actual Measurement	1 (highway)	H	Actual Measurement
CANTILEVER SIGN STRUCTURES	**Item 28A**	**Item 28B**	**Item 55A**	**Item 55B**	**Item 56**	**Item 10**	**Item 42B**	**Item 54A**	**Item 54B**
Vertical Member on Right Shoulder (No Barrier in Median)	0	# Lanes On Route Being Inventoried	H	Actual Measurement	999	if over highway actual measurement, if not code 99.9	1 (highway)	H	if over highway actual measurement, if not code 99.99
Vertical Member on Right Shoulder (With Barrier in Median)	0	# Lanes On Route Being Inventoried	H	Actual Measurement	Actual Measurement to Barrier	if over highway actual measurement, if not code 99.9	1 (highway)	H	if over highway actual measurement, if not code 99.99
Vertical Member in Median	0	# Lanes On Route Being Inventoried	H	Actual Measurement	Actual Measurement	if over highway actual measurement, if not code 99.9	1 (highway)	H	if over highway actual measurement, if not code 99.99

This page is intentionally left blank.

Appendix D - Reinforced Concrete Deck Arches

Reinforced Concrete Deck Arches present some classification issues. These structures generally contain fill and the roadway is continuous across them without having a real deck. Therefore, the Deck Condition Rating should be N for not applicable. Substructure and Superstructure ratings would be assigned. However, in some cases these structures have been widened with either beam supported decks or prestressed deck slabs.

1. When there is no cantilever off of the arch, then no deck elements should be coded and the Deck Rating should be N. (See figure 1)
2. When the original arch has a cantilever system, then again no deck elements should be coded and the Deck Rating should be N. (See figures 2 and 3)
3. When the arch has been widened using either a deck supported beams or a self supporting slab, then the deck or slab elements should be used and the deck rating should be assigned (from 0 to 9) based on the widened deck section only. (See figures 4 and 5 on following page)

Figure 1 – Arch no cantilever

Figure 2 – Arch cantilever sidewalk topside

Figure 3 – Arch cantilever sidewalk

Appendix D – Continued

Figure 4 – Arch widened from below

Figure 5 – Arch widened profile

Appendix E - As-Bid/As-Built Load Rating Flow Chart

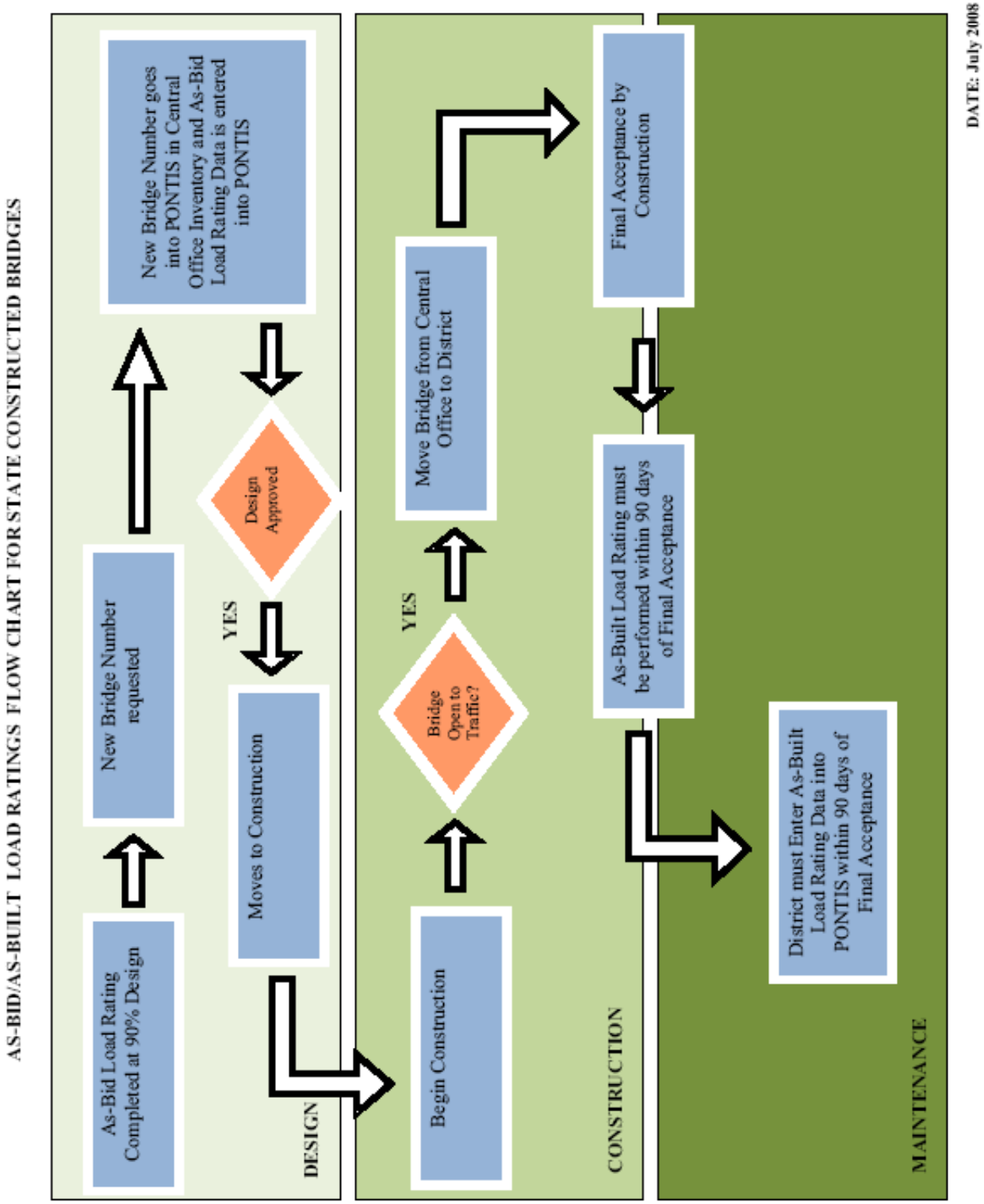

This page is intentionally left blank.

Appendix F - Structures Opened to Traffic before final acceptance by Construction

When structures are opened to traffic prior to final acceptance by construction, certain issues arise:

- They are subject to permitted overweight vehicles.
- Prior to the initial inspection, the data may be incomplete making calculating a sufficiency rating impossible.
- When a bridge is created an inspection date is assumed. If the period between opening to traffic and final acceptance is long, the bridge may show up as a delinquent inspection.
- If the bridge is built with phased construction, the capacity of the bridge during the phased construction may be different from the as bid or as built load ratings for the completed bridge, however based on parametric studies performed by the Office of Maintenance the capacity of the bridge during phased construction will generally not be significantly less than the capacity of the final bridge.

To resolve these issues the following process shall be followed:

1. When a bridge is opened to traffic, the district shall move the bridge from Central Office (09) to the proper District and Item 41 shall be coded 'A' open to traffic no restrictions. (The as-bid load rating should have been entered when the structure was created in Pontis, however if the load rating data is incomplete, the District will update the load rating data at this time.)
2. If the bridge has not been accepted by construction, the district will list the bridge number on the Sharepoint site maintained by the Office of Maintenance.
3. In the week before March 1 and September 1, the District shall move any bridges that have not had final acceptance by construction that would show up as delinquent inspections to Central Office prior to running the compliance reports. After the compliance reports are run, any such bridges shall be returned to the proper District. The amount of time these bridges are in Central Office shall be minimized and in no case shall it be more than 1 day.
4. When the quarterly Comprehensive Bridge Report (CBR) is run, the Office of Maintenance will temporarily shift the bridges on the Sharepoint site back to Central Office, and then return them to the proper district after the CBR is posted on the Department's website. This will prevent bridges with incomplete information showing up on the website.
5. Once a year, generally during the month of March, the Office of Maintenance creates an extract of data for submission to the Federal Highway Administration. This is referred to as the National Bridge Inventory (NBI) data extract. To minimize the errors in the NBI data extract, the Office of Maintenance will shift the bridges to Central Office prior to creating the NBI data extract. After the extract is made the Office of Maintenance will move these bridges back to the proper district.
6. For most bridges the capacity of the phased bridge will not be significantly different than the final capacity the as bid load rating will be valid during staged construction. There may be rare cases where this isn't true, the district shall review the phased construction to determine if it is likely that the bridge during a phase construction may have less capacity than the as bid load rating show. For example live load on a slab that is acting as a cantilever during phased construction that will not be a cantilever in the completed bridge. In addition, complex structures may require investigation if built in phased construction. For unusual cases contact the State Bridge Evaluation Engineer for guidance.
7. **Special Note:** After the bridge has received final acceptance and the initial inspection has been performed, please completely remove it from the SharePoint site.

This page is intentionally left blank.

Appendix G - Prompt Corrective Action

Conditions that will cause the box on the Inspection Report entitled, “This report identifies deficiencies which require prompt corrective action,” to be checked.

NBI Ratings (Any one of the following conditions)

Item 58 (Deck) <= 3

Item 59 (Superstructure) <= 3

Item 60 (Substructure) <= 3

Item 61 (Channel) <= 3

Item 62 (Culvert) <= 3

Or

Smart Flag Element (Any one of the following conditions)

356 - condition state quantity 2 or 3 > 0

360 - condition state quantity 2 or 3 > 0

361 - condition state quantity 2 or 3 > 0

362 - condition state quantity 3 > 0

363 -condition state quantity 3 or 4 > 0

369 - condition state quantity 3 or 4 > 0

370 - condition state quantity 3 or 4 > 0

This page is intentionally left blank.

Appendix H - ***NBIS Inspection of Structures under Construction (23 CFR 650 Subpart C)***

When a highway bridge or any portion of a highway bridge is open to public travel, it is to be inspected per the NBIS. (See 23CFR-650.303) The complete SI&A data is to be entered into the appropriate inventory within the timeframes established in the NBIS after the bridge construction/rehabilitation is determined by the owner to be substantially complete (all lanes open to traffic) for a particular bridge (i.e., not necessarily complete for an entire contract that may include roadwork and other bridges). (See 23 CFR 650.315) As a general rule, FHWA recommends that initial inspections on new or rehabilitated bridges be completed before being opened to public traffic.

To assist in clarifying FHWA's expectations for inspections and SI&A data input, as based on the NBIS, included are a few example scenarios. The NBIS does not state explicitly when an initial inspection is to start. However, it does state the deadline for input into an inventory the SI&A data that is to be collected from an inspection.

1) New structures

a) For a new structure on a new alignment and open to public traffic, an NBIS inspection is to be completed and SI&A data is to be inputted into the state or federal agency inventory within 90 days of completion of the work (open to public travel) for state or federal agency bridges or 180 days for all other bridges. Completed new structures not open to traffic are not subject to the NBIS since they are technically closed. However, once a new structure is open to traffic, it is subject to the NBIS and the state's or federal agency's inventory is to be updated with the new SI&A data within the 90/180 day timeframe. FHWA encourages owners to complete the initial inventory inspection before the structure is open to traffic, and in many cases, this would be necessary in order to meet the regulatory timeframes. This practice also allows for an inspection under more convenient circumstances for both the inspector and the travelling public. It may also assist in completing the final punch list for the new structure.

b) Staged construction of a new structure presents additional variables in determining when to complete an NBIS inspection. For a new structure on a new alignment, the portion of the new structure open to public traffic is to be inspected at a regular frequency to ensure its safety. Such safety inspections are to be completed in accordance with the NBIS. The initial NBIS inspection and recording of SI&A data is required once all of the staged construction is complete (not the contract) and the new structure is carrying full traffic. The new SI&A data is to be inputted into the state's or federal agency's inventory within the 90/180 days. This case is similar to a temporary structure, see 4) below.

2) Existing structure replaced with new structure.

a) For an existing structure replaced with a new structure on a new alignment, the existing structure is to be inspected per the NBIS as long as it remains in service as a highway bridge open to public traffic. See 1) a) for when to inspect a new structure.

b) For an existing structure being replaced with a new structure on the same alignment and under staged construction, the portion of the existing/new structure open to

public traffic is to be inspected per the NBIS. It may be prudent for the owner to perform an NBIS inspection prior to construction. This would provide a 24 month period for construction to be completed assuming nothing was discovered that warranted action such as repair or more frequent monitoring. It may also prove to be sensible to include in the construction contract documents, making the contractor accountable for ensuring the safety of the open portion of the existing/new bridge during the period of the contract, which would include periodic inspections and monitoring. Once the new structure is complete and carrying full traffic the NBIS inspection is to be finished and the new SI&A data is to be inputted into the state's or federal agency's inventory within 90/180 days.

3) Existing structure rehabilitation

a) For an existing bridge that is closed to public traffic during rehabilitation work, an NBIS inspection is to be completed and SI&A data is to be updated and inputted into the state or federal agency inventory within 90/180 days of completion of the work (all lanes open to public travel)

b) For an existing bridge that is open to public traffic during rehabilitation work, regularly scheduled NBIS inspections are to be performed. If an NBIS inspection cannot be conducted due to reasonable circumstances such as a hazardous project site or conditions unfavorable to complete an inspection, then those circumstances should be documented and the inspection is to be rescheduled at the earliest date possible. Once all risks have been mitigated, an NBIS inspection is to be completed and updated SI&A data is to be inputted into the state's or federal agency's inventory within 90/180 days.

c) For an existing bridge being rehabilitated under staged construction, see 2) b).

4) Temporary structure used in construction - For a temporary structure being used to carry public traffic while the permanent structure is closed, the temporary structure is to be inspected in accordance with the NBIS. The temporary structure is not required to have its own individual SI&A data in the state's or federal agency's inventory. Generally, the structure being rehabilitated or replaced remains in the inventory and appropriate SI&A data, Items 10, 41, 47, 53, 54, 55, 56, 70, and 103, are to be coded for the temporary structure. Once the permanent structure is complete and open to public traffic, an NBIS inspection is to be completed and updated SI&A data is to be inputted into the state's or federal agency's inventory within 90/180 days

5) Multiple structures under construction - For construction contracts involving multiple structures, the inspection requirements should be determined on a structure by structure basis. Structures not under construction, which are open to the traveling public, are subject to NBIS inspection requirements.