Steel Bridge Decks
Factors Affecting Casting Sequence

2014 Design Training Expo

Dennis Golabek, P.E.

Assistant State Structures Design Engineer

09/27/2013 12:57

AGENDA - Steel Bridge Decks
Factors Affecting Casting Sequence

- FDOT Survey
- Factors
- Design Criteria
- Design Example

FDOT SURVEY

- Constructed between 2000-2013
- 2-Span Continuous Steel
- 67 Bridges
  - ✓ 30 - No cracks
  - ✓ 12 - Cracks in Pour 1
  - ✓ 27 – collect data
    - 13 no cracks
    - 14 with cracks

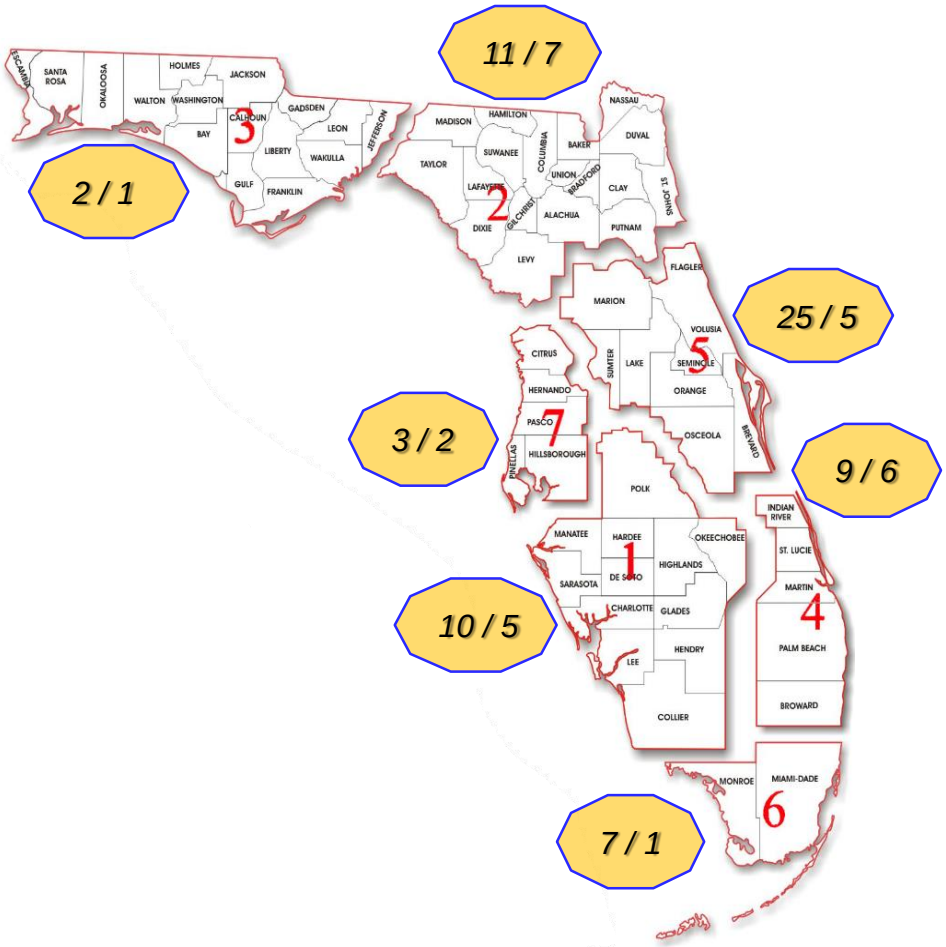

2014 Design Training Expo

FDOT SURVEY

- Design Code
- L_1/L_2 or L/D Ratio
- Concrete Strength
- Deck Placement
- Placement Termination
- Reinforcement

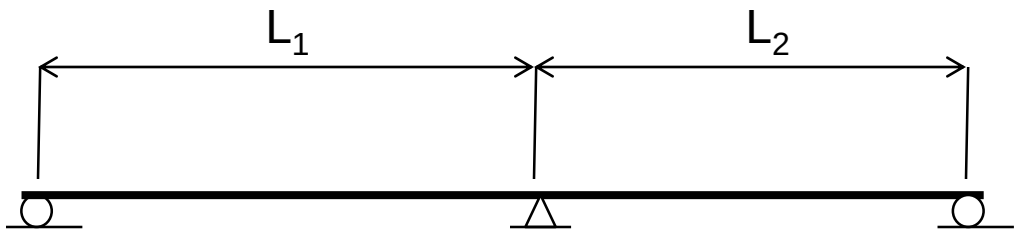

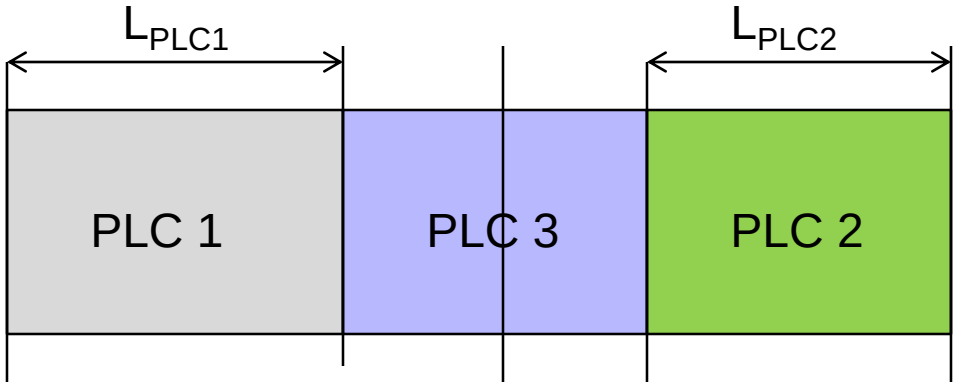

FDOT Survey

- General Observations
  - ✓ Deck Placement Sequence
  - ✓ Deck termination
  - ✓ Span/Span ratio
  - ✓ Reinforcing Termination

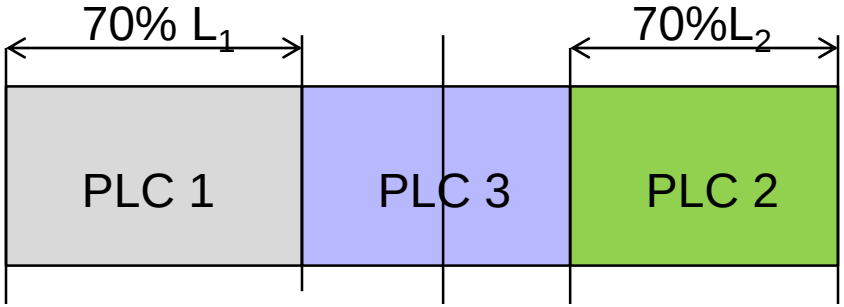

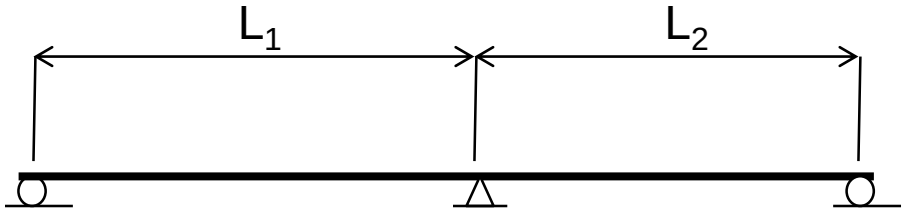

AVG L_1/L_2 = 1.05 for uncracked

AVG L_1/L_2 = 1.12 for cracked

FACTORS

- Shrinkage and Temperature
  - ✓ Spec 400-7.1 cold and hot weather
  - ✓ Spec 400-16.1 Surface Moisture
  - ✓ Spec 400-16.4 curing for bridge decks
- Wind velocity – Section 400-7.1.3
- Temperature difference during the day
- Contractor changes deck placement sequence
- Designers do not properly consider the deck placement sequence in design

CRITERIA

- AASHTO LRFD BDS

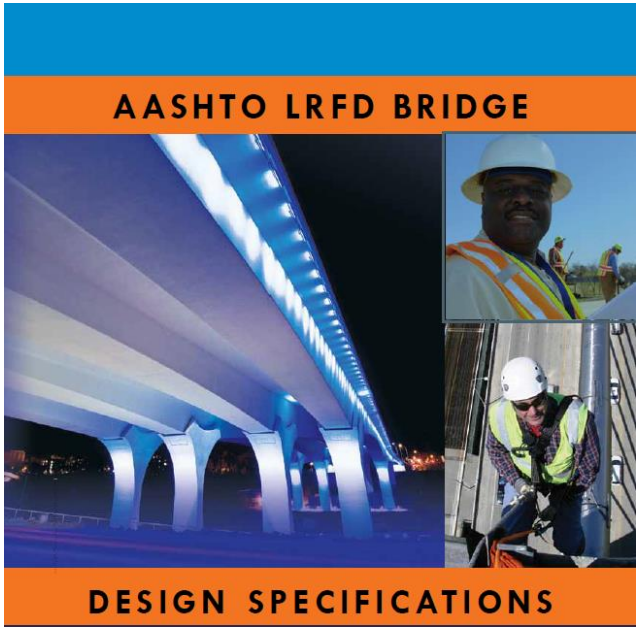

- FDOT Structures Manual

Criteria - Longitudinal tension stresses in the concrete deck

- AASHTO LRFD BDS
  - ✓ 6.10.1.7 – Load Combination Service II
    1.0 DL + 1.3 (LL+IM)

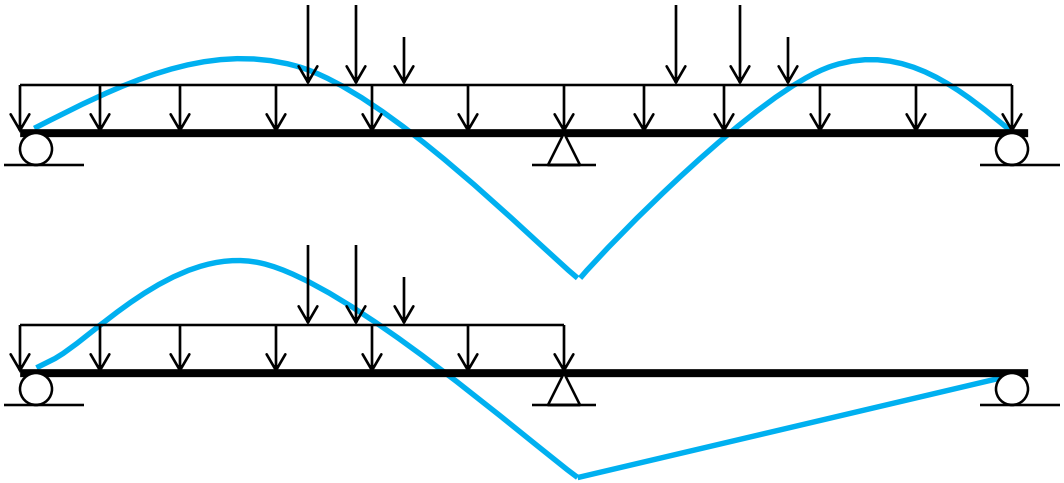

  - ✓ 6.10.3.2.4 – Factored Construction Loads

Criteria - Detailing

- AASHTO LRFD BDS
  - ✓ 1% Steel – 2/3 in top layer

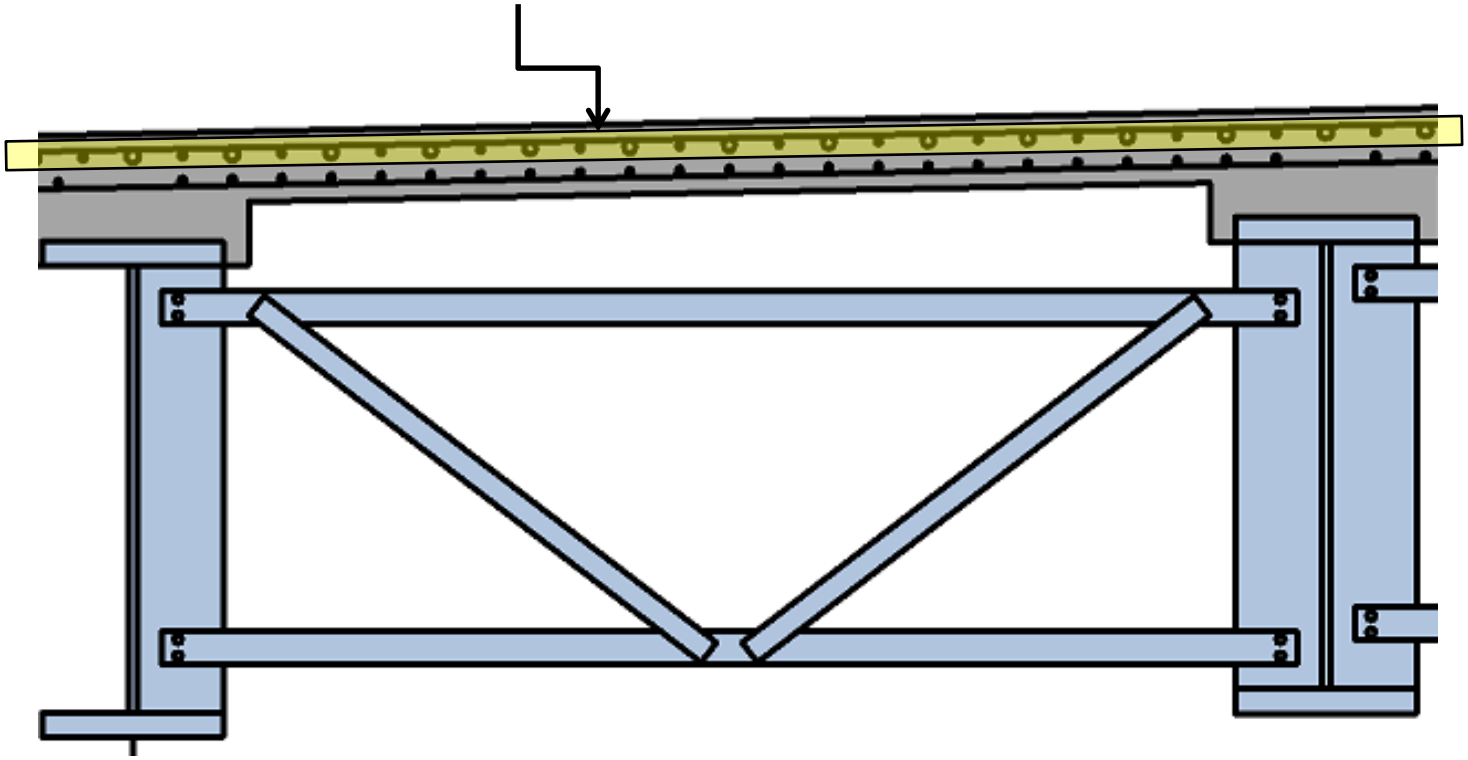

Criteria - longitudinal tension stresses in the concrete deck

- FDOT Structures Design Guidelines
  - ✓ 4.2.7 Minimum Negative Flexure Slab Reinforcement [6.10.1.7]
    - Any combination of DL and LL is considered
  - ✓ 4.2.8 Crack Control in Continuous Decks [5.10.8]
    - Deck Casting Sequence
    - Limit Pours
    - Camber Diagrams
    - Concrete Strengths
    - Longitudinal Tension Stresses per LRFD [6.10.3.2.4]
  - ✓ 4.2.9 Concrete Decks on Continuous Steel Girders
    - Longitudinal reinforcing steel per LRFD [6.10.1.7]

Criteria

- Deck Casting Sequence
- Limit Pours ⇐ *200 to 400 cy*
- Concrete Strengths
- Camber Diagrams

Day	Class II (Bridge Deck) (psi)
3	2740
6	3180
9	3610
12	3840
15	4020
18	4160
21	4290
24	4390
27	4500

Criteria

- FDOT Structures Design Guidelines/Detailing Manual
  - ✓ 2.13.1 Constructability Limit State Checks (Rev 01/14)

Construction Loads:

Finishing Machine Load: 13 kips

Construction Live Load: 20 psf extended over the entire bridge width and 50-feet in longitudinal length centered on the finishing machine.

Removable Deck Cantilever Timber Forms with Overhang Brackets: 15 psf

Live load at or near the outside edge of deck during deck placement: 75 plf applied as a moving load over a length of 20-feet.

Construction Inactive Basic Wind Speed Including Exposure Period Reduction Factor (RE): 66 MPH

Construction Active Basic Wind Speed: 20 MPH

EXAMPLE – Calculate longitudinal tension stresses in the concrete deck

- Bridge Configuration
- Deck Placement and Live Load Analyses
- Deck Stresses
- Check for Uplift

EXAMPLE

- Bridge Information
  - ✓ Span length

    N = 1.23

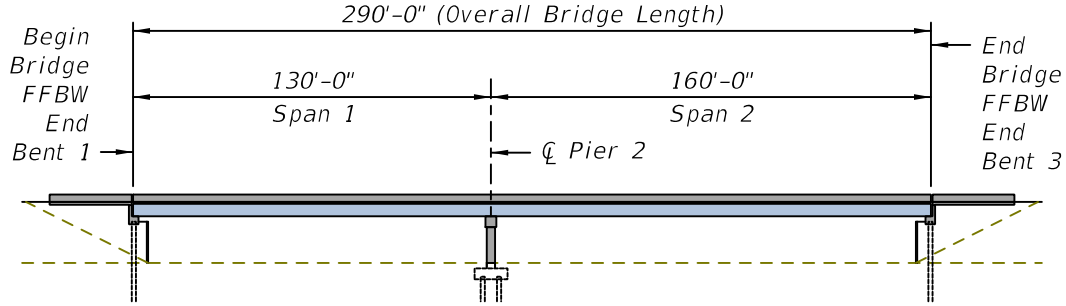

  - ✓ Typical Section

    $L_{eff}/D = 26$

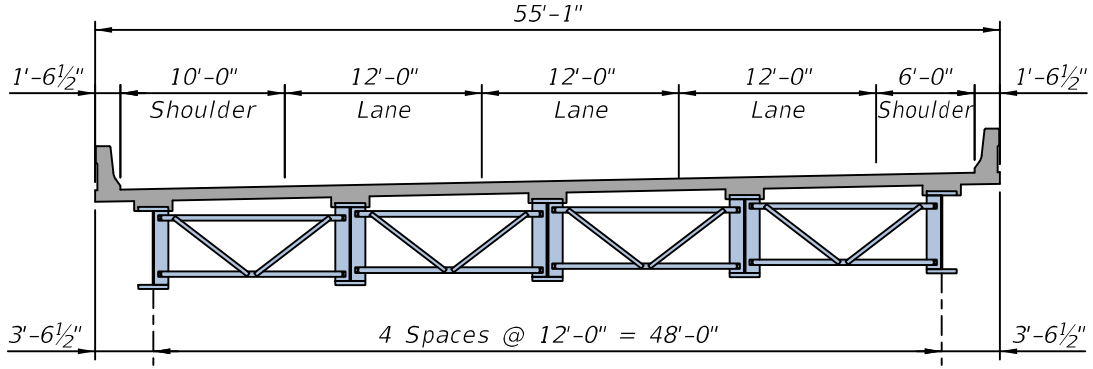

  - ✓ Girder Elevation

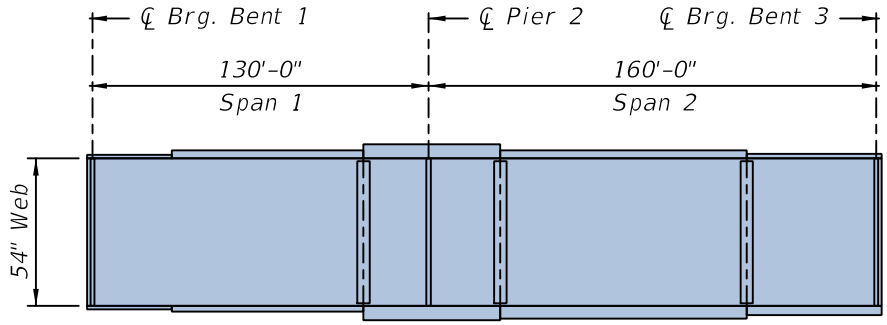

2014 Design Training Expo

EXAMPLE

- Deck Placement

	Deck X-sect Area		
	Width=	55.083	ft
	Thickness=	9	in
	PLC 1	PLC 3	PLC 2
L (ft)	90	70	130
Vol (cy)	138	107	199

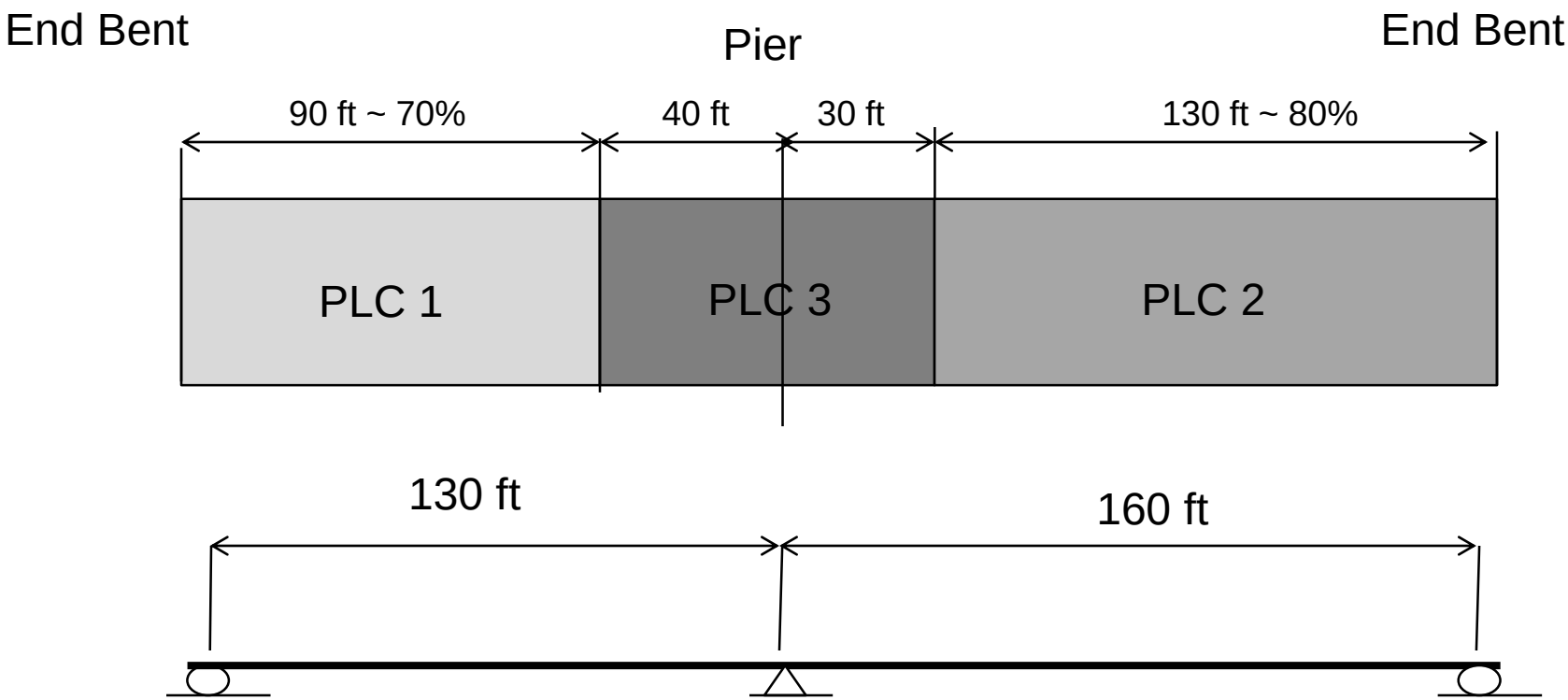

EXAMPLE

f'c 28 day:	4500	(psi)
f'c 3 day:	2740	(psi)
Modular Ratio(n):	9.6	

- Section Properties
  - ✓ SDG Table
  - ✓ 2nd Placement – 1st placement 3 days old

		Steel	Composite
Yb:	(in)	26.0	49.1
Yt:	(in)	31.0	19.2
Ix:	(in)4	44309	114357

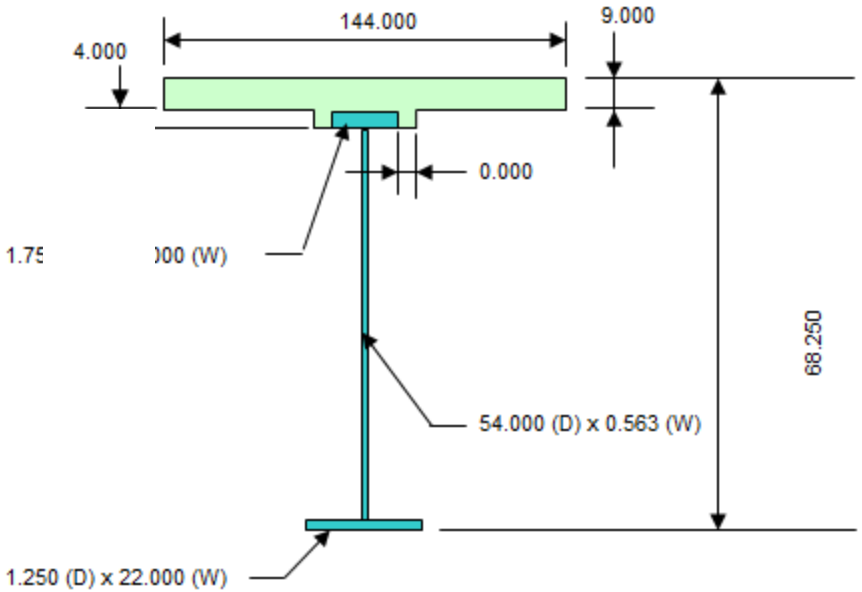

SECTION PROPERTIES (N=Infinity)

Section	A (in.^2)	yb (in.)	Ayb (in.^3)	d (in.)	Ad^2 (in.^4)	Io (in.^4)	Icg (in.^4)
Top Flange	21.00	56.13	1178.63	30.08	19007.23	5.36	
Web	30.38	28.25	858.09	2.21	148.35	7381.13	
Bot Flange	27.50	0.63	17.19	-25.42	17762.88	3.58	
SUM	78.88	26.04	2053.91		36918.5	7390.1	44308.5

SECTION PROPERTIES (N= 9.6)

Section	A (in.^2)	yb (in.)	Ayb (in.^3)	d (in.)	Ad^2 (in.^4)	Io (in.^4)	Icg (in.^4)
SLAB	119.67	64.25	7689.08	15.18	27573.8	638.3	
STEEL	78.88	26.04	2053.91	-23.03	41836.8	44308.5	
SUM	199	49	9743		69411	44947	114357

EXAMPLE

- Deck Placement and Live Load Analyses

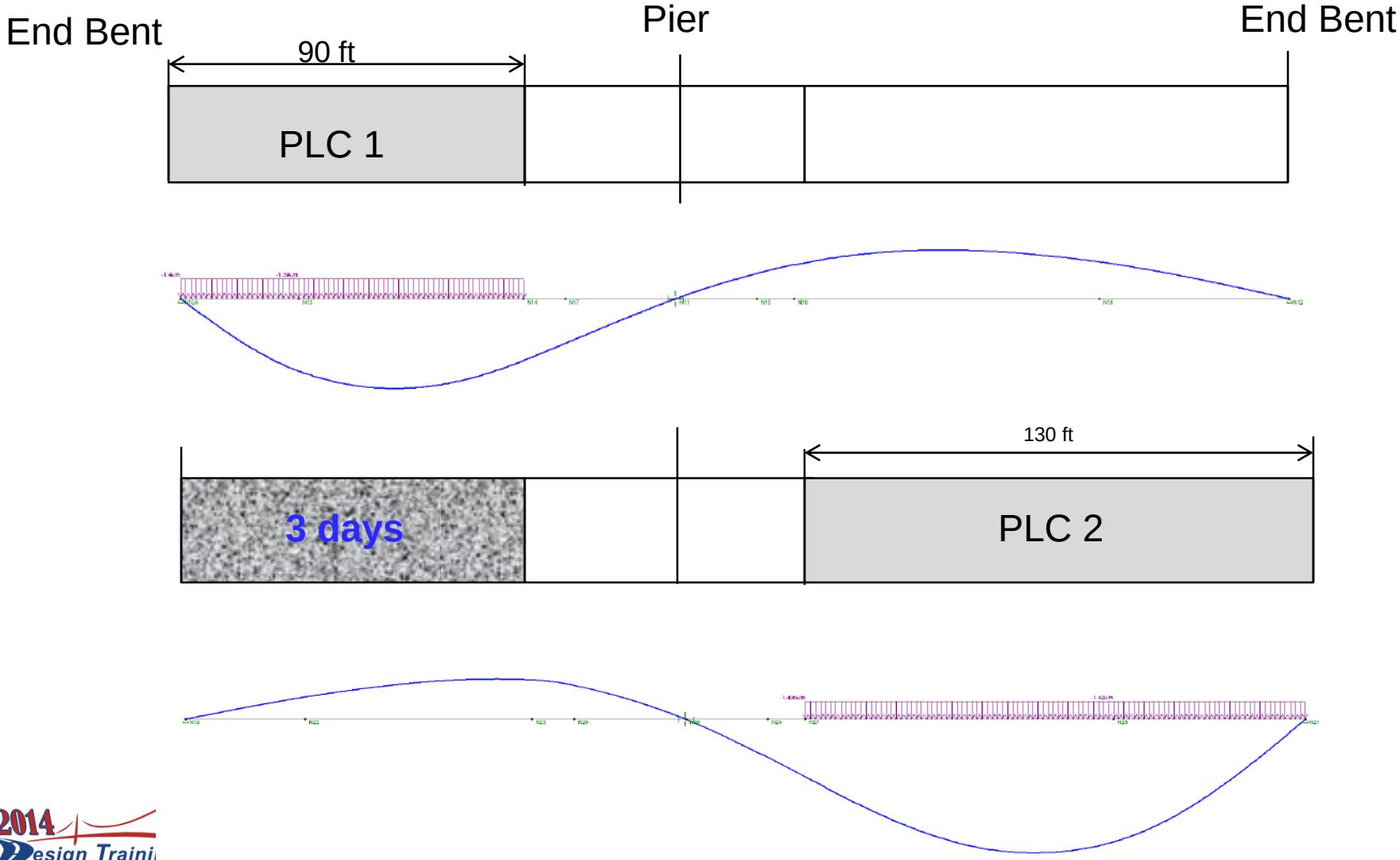

EXAMPLE

- Deck Placement Analyses

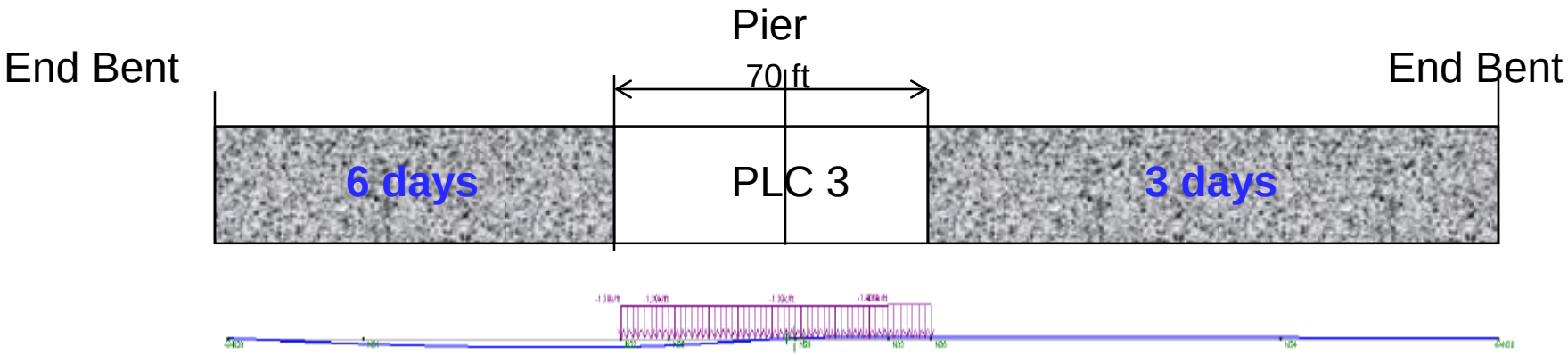

- Live Load Analysis

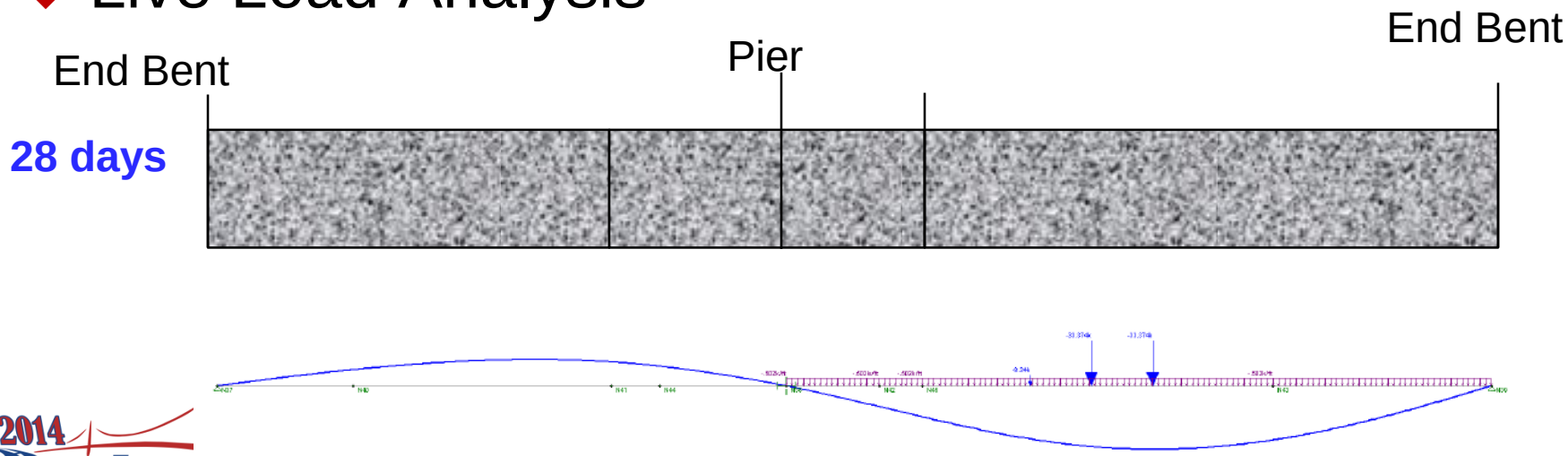

EXAMPLE

- Uplift

Steel

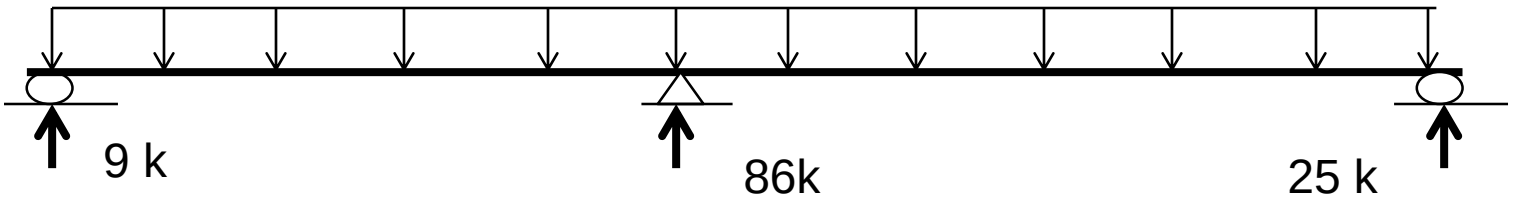

PLC 1

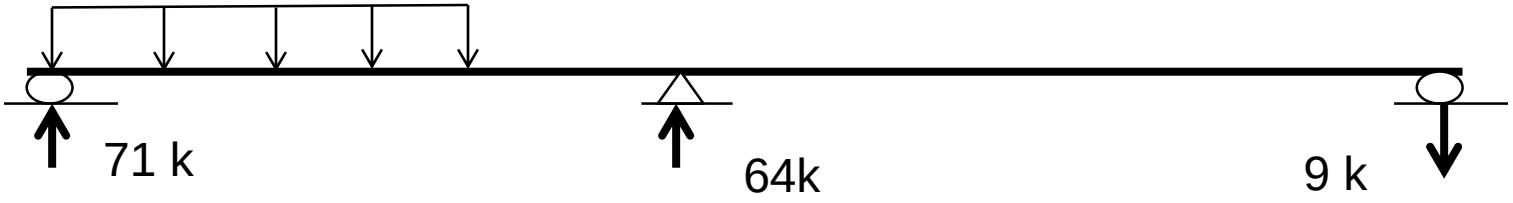

EXAMPLE

- Longitudinal tension stresses in deck

$\sigma_{conc} = \sigma_{steel}/n$

	Steel Only	PLC 1	PLC 2	Construction Strength I	PLC 3	LL+I	Service II
Dist.(ft)	M (k-ft)	M (k-ft)	M (k-ft)	Deck σ (ksi)	M (k-ft)	Moment (k-ft)	Deck σ (ksi)
0.0	0	0	0	0.000	0	0	0.000
7.8	0	0	-166	-0.046	25	-124	-0.070
15.5	0	0	-331	-0.092	50	-247	-0.140
23.3	0	0	-497	-0.139	75	-371	-0.210
31.0	0	0	-662	-0.185	100	-495	-0.280
31.0	0	0	-662	-0.161	100	-495	-0.243
45.8	0	0	-978	-0.238	147	-730	-0.359
60.5	0	0	-1293	-0.314	194	-965	-0.475
75.3	0	0	-1608	-0.391	242	-1201	-0.591
90.0	0	0	-1923	-0.468	289	-1436	-0.707
90.0	0	0	0	0.000	0	-1436	-0.390
92.8	0	0	0	0.000	0	-1480	-0.402
95.5	0	0	0	0.000	0	-1524	-0.414
98.3	0	0	0	0.000	0	-1568	-0.426
101.0	0	0	0	0.000	0	-1612	-0.438

58'

$\varphi f_r = 0.358$ ksi

$\varphi f_r = 0.458$ ksi

EXAMPLE

- Reinforcing Detailing
  - ✓ SDG 4.2.11 Temp & Shrinkage – No. 4 (min) at 12-inch (max)
  - ✓ LRFD BDS – No. 6 max, 12-inch max and 1% Steel – 2/3 in top layer

Deck X-sect Area		
Width=	55.083	ft
Thickness=	9	in
sacrificial=	0	in
area =	5949	in^2
1 % steel =	59.5	in^2

	Spa	size	area	no	Total
			in^2		in^2
Top	12	5	0.31	55	17.1
	12	6	0.44	51	22.4
Bot	6	4	0.2	92	18.4
		4	0.2	8	1.6
					59.5
		total steel % =	1.00%		
		top steel % =	0.66%		

EXAMPLE - Reinforcing Detailing

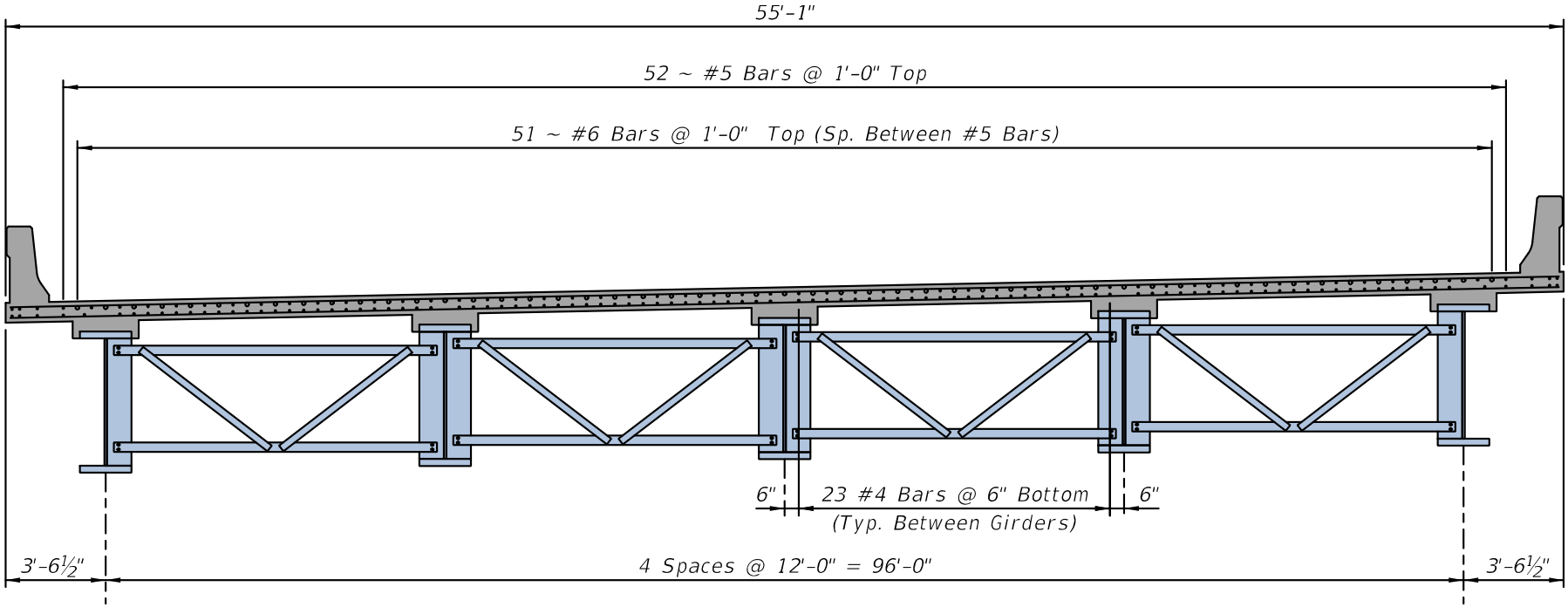

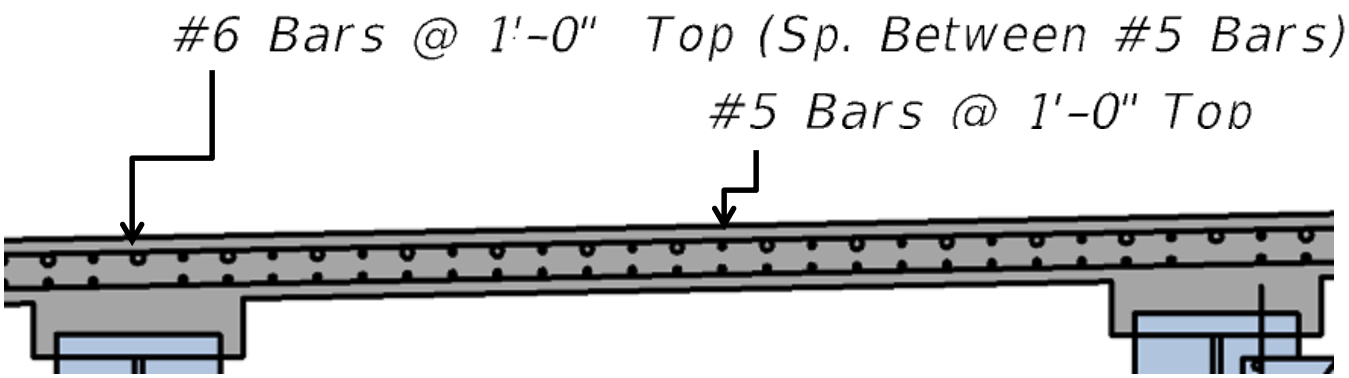

2014 Design Training Expo

EXAMPLE

- Reinforcing Detailing
  - ✓ Negative moment regions

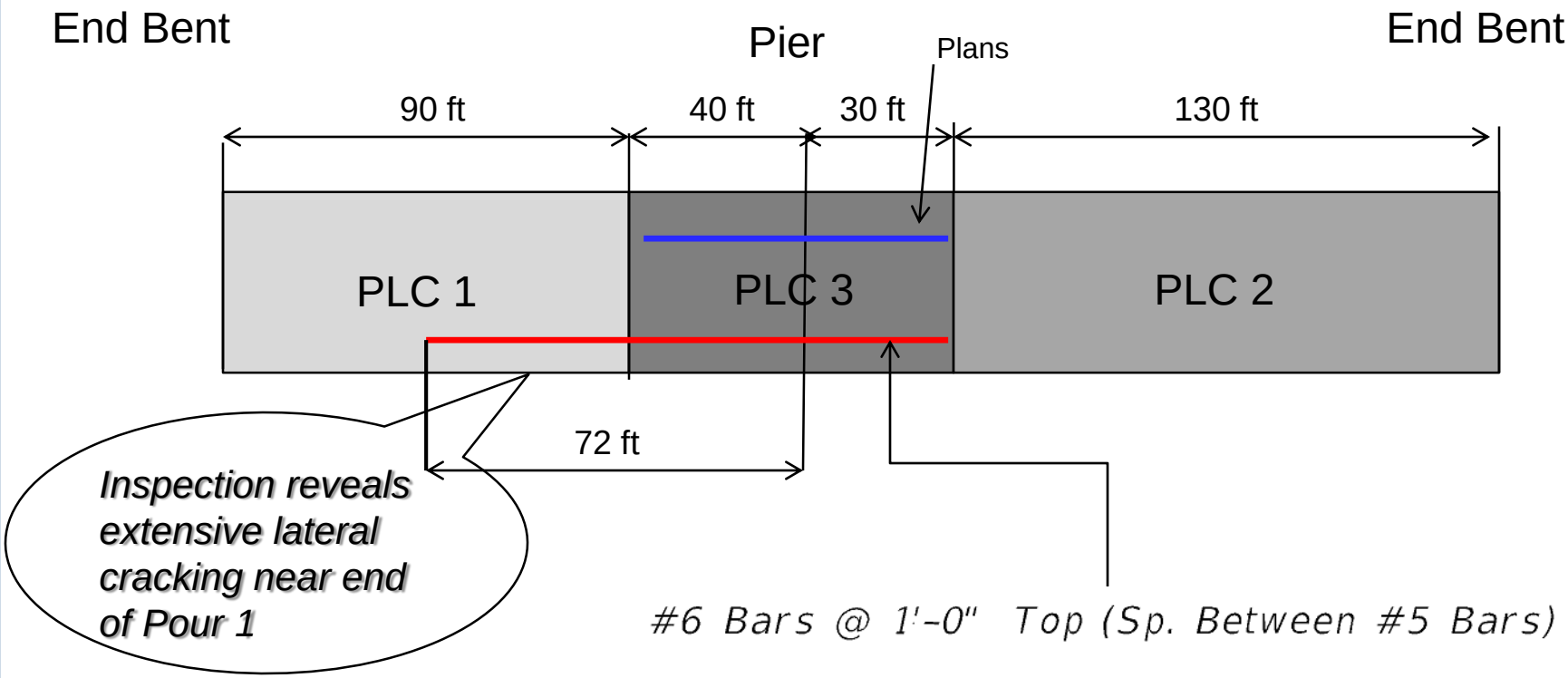

Example

- Other Ways
  - ✓ Change placement limits
  - ✓ Change sequence

Example

- Other Ways
  - ✓ Change limits (50%L)
    - Placement quantity
    - Deck longitudinal tension stress
    - Uplift
    - Reinforcement termination

	Deck X-sect Area		
	Width=	55.083	ft
	Thickness=	9	in
	PLC 1	PLC 3	PLC 2
L (ft)	65	145	80
Vol (cy)	100	222	122

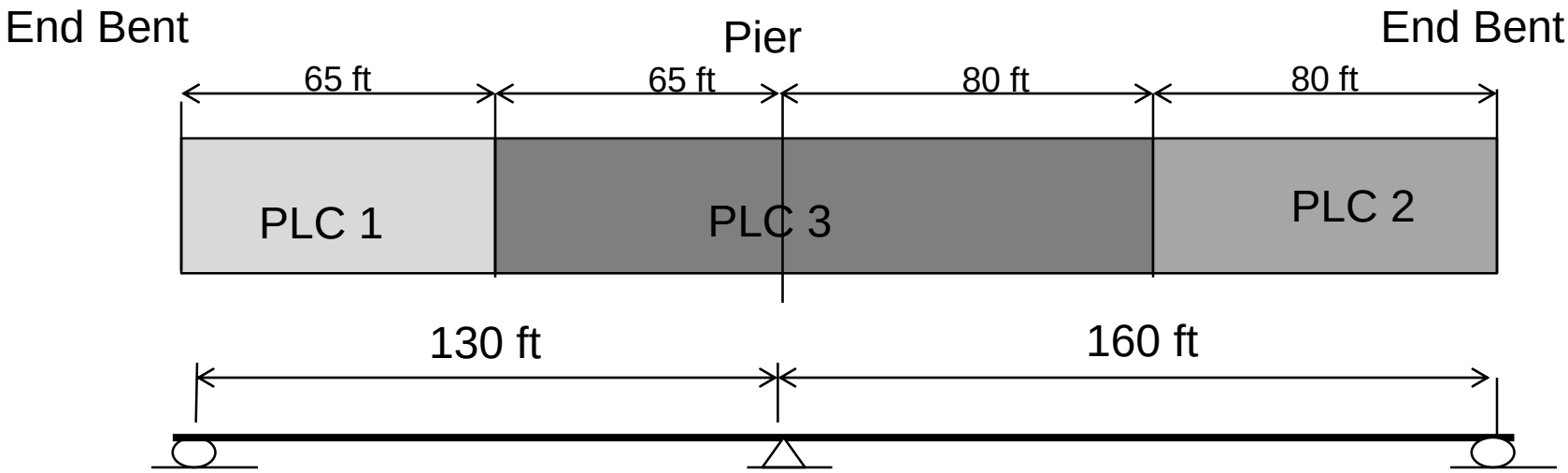

2014 Design Training Expo

Example

- Change limits (50%L)

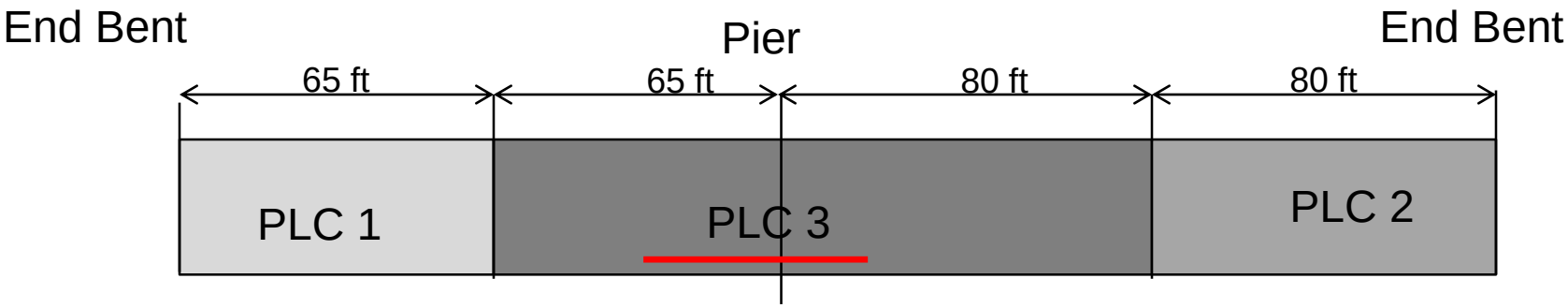

	Steel Only	PLC 1	PLC 2	Construction Strength I	PLC 3	LL+I	Service II
Dist.(ft)	M (k-ft)	M (k-ft)	M (k-ft)	Deck σ (ksi)	M (k-ft)	Moment (k-ft)	Deck σ (ksi)
0.0	0	0	0	0.000	0	0	0.000
7.8	0	0	-76	-0.021	38	-124	-0.047
15.5	0	0	-151	-0.042	76	-247	-0.094
23.3	0	0	-227	-0.063	114	-371	-0.141
31.0	0	0	-302	-0.084	151	-495	-0.187
31.0	0	0	-302	-0.073	151	-495	-0.163
39.5	0	0	-385	-0.094	193	-630	-0.208
48.0	0	0	-468	-0.114	234	-766	-0.253
56.5	0	0	-551	-0.134	276	-902	-0.297
65.0	0	0	-633	-0.154	317	-1037	-0.342
90.0	0	0	-1923	-0.468	289	-1436	-0.707

$\varphi f_r = 0.358$ ksi

$\varphi f_r = 0.458$ ksi

Example

- Change sequence
  - ✓ Placement quantity
  - ✓ Uplift
  - ✓ Deck longitudinal tension Stress
  - ✓ Reinforcement termination

	Deck X-sect Area		
	Width=	55.083	ft
	Thickness=	9	in
	PLC 1	PLC 3	PLC 1
L (ft)	78	148	64
Vol (cy)	120	226	98

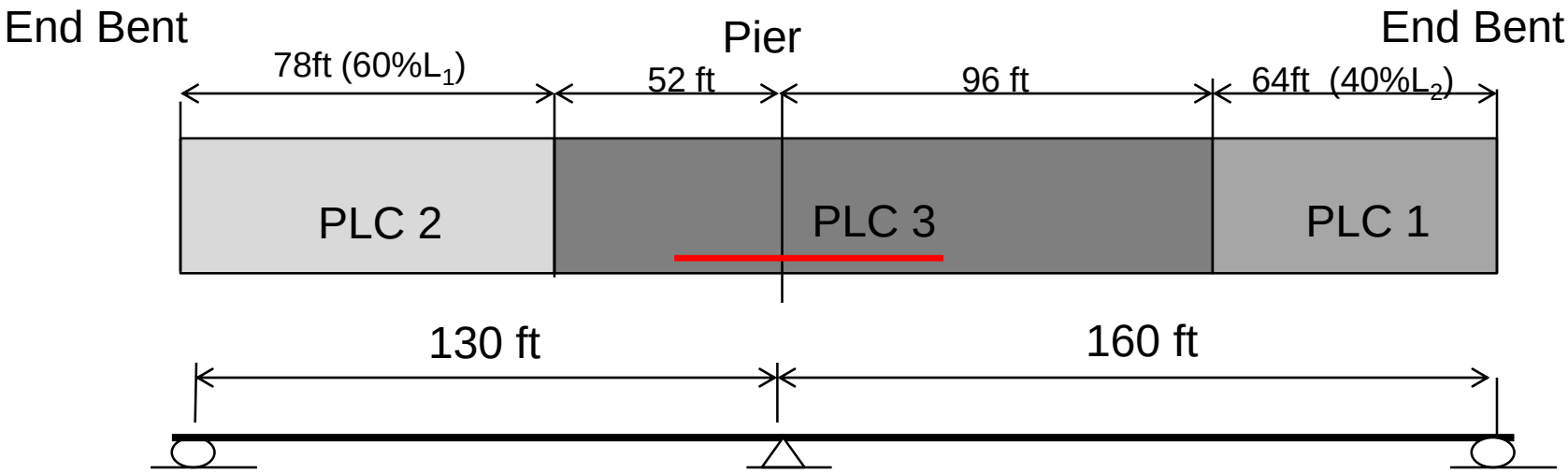

EXAMPLE

- Uplift

Steel

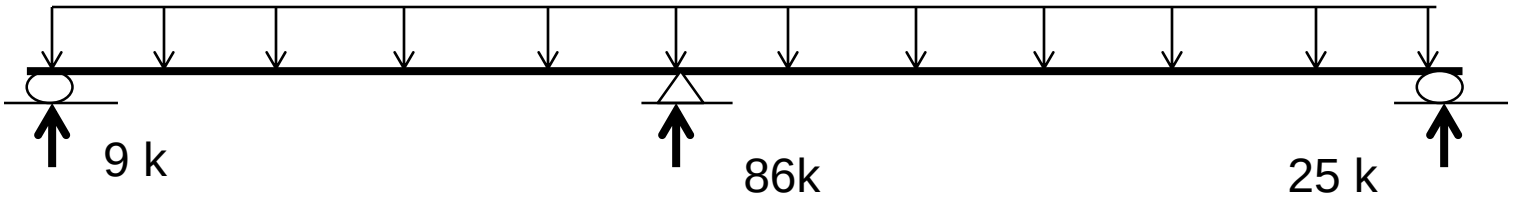

PLC 1

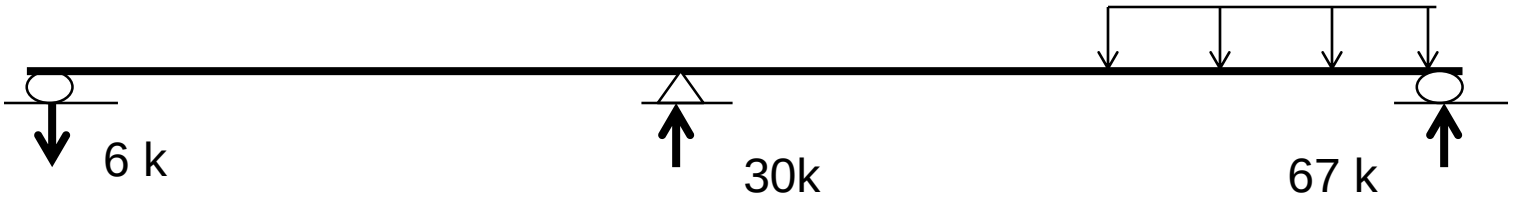

Example

- Change placement limits

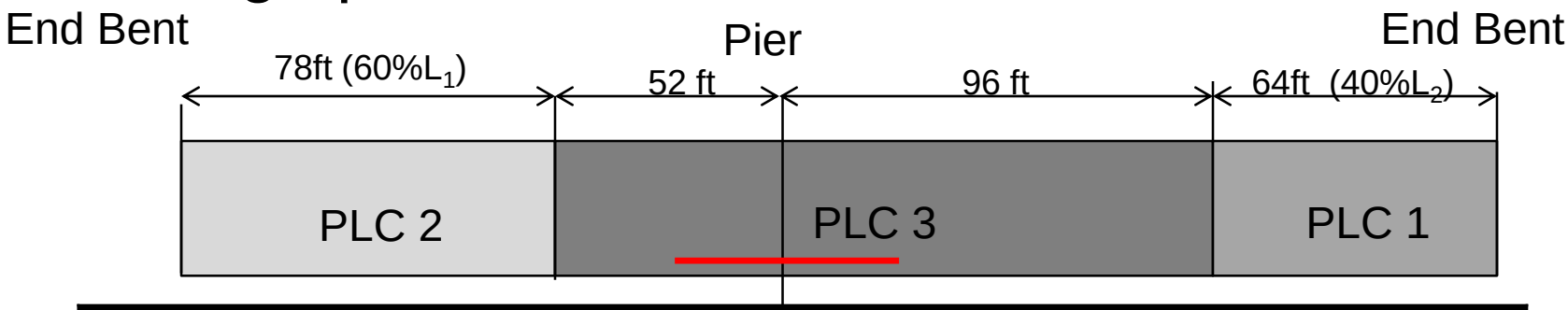

	Steel Only	PLC 1	PLC 2	Construction Strength I	PLC 3	LL+I	Service II
Dist.(ft)	M (k-ft)	M (k-ft)	M (k-ft)	Deck σ (ksi)	M (k-ft)	Moment (k-ft)	Deck σ (ksi)
96	0	0	-503	-0.110	1612	-701	0.021
100	0	0	-474	-0.104	1519	-661	0.019
104	0	0	-445	-0.097	1425	-620	0.018
107	0	0	-416	-0.091	1332	-580	0.017
111	0	0	-387	-0.085	1239	-539	0.016
111	0	0	-387	-0.091	1239	-539	0.002
123	0	0	-290	-0.068	929	-404	0.001
136	0	0	-193	-0.045	619	-270	0.001
148	0	0	-97	-0.023	310	-135	0.000
160	0	0	0	0	0	0	0.000
SPAN 1 90.0	0	0	-1923	-0.468	289	-1436	-0.707

$\varphi f_r = 0.358$ ksi

$\varphi f_r = 0.458$ ksi

Example

- Change placement limits

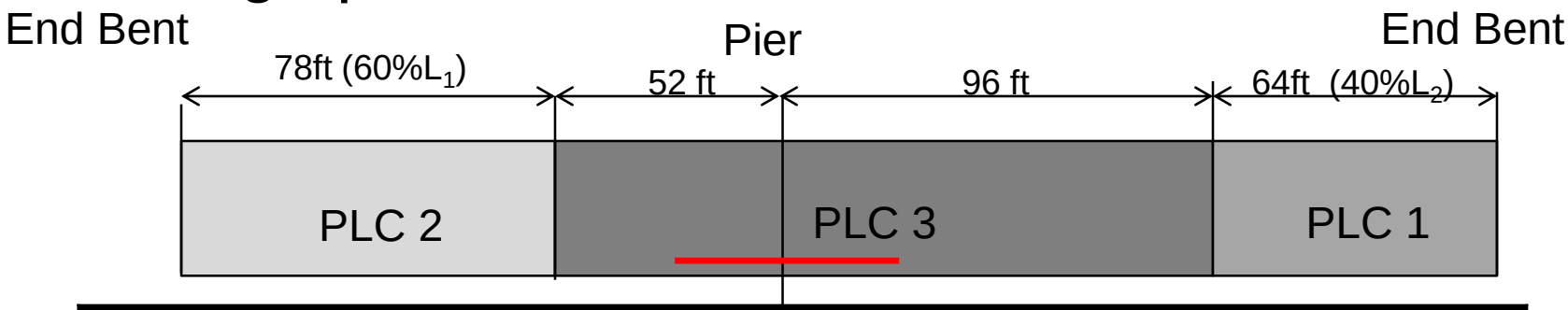

	Steel Only	PLC 1	PLC 2	PLC 3	Construction Strength I	LL+I	Service II
Dist.(ft)	M (k-ft)	M (k-ft)	M (k-ft)	M (k-ft)	Deck σ (ksi)	Moment (k-ft)	Deck σ (ksi)
0	0	0	0	0	0.000	0	0.000
8	0	0	0	-36	-0.011	-124	-0.030
16	0	0	0	-71	-0.021	-247	-0.059
23	0	0	0	-107	-0.032	-371	-0.089
31	0	0	0	-142	-0.043	-495	-0.119
31	0	0	0	-142	-0.037	-495	-0.103
43	0	0	0	-196	-0.051	-682	-0.143
55	0	0	0	-250	-0.066	-870	-0.182
66	0	0	0	-304	-0.080	-1057	-0.221
78	0	0	0	-358	-0.094	-1245	-0.260

$\varphi f_r = 0.358$ ksi

$\varphi f_r = 0.458$ ksi

SDG 4.2.8 – 2015 Revisions

B. For simple span and continuous steel beam/girder superstructures, develop camber diagrams taking into consideration the deck casting sequence and the effect on the changing cross section characteristics of the superstructure. ~~For continuous superstructures, the sequence should result in construction joints spaced approximately at locations of the points of dead load moment contraflexure.~~ On continuous superstructures, check longitudinal tension stresses in previously cast sections of deck during the deck casting sequence per ***LRFD*** [6.10.3.2.4]. Assume a time interval of 3 days between successive pours in a given continuous unit. Include plan notes s~~S~~tating~~e on the plans~~ that a minimum of 72 hours is required between successive pours in a given continuous unit and that the deck casting sequence cannot be modified without also reevaluating the associated camber diagram. When developing casting sequences and camber diagrams, use the appropriate concrete strength based on the day the structure is being analyzed. Use the following values to approximate the concrete strength gain (use interpolation to obtain other values). See also ***SDG*** 5.2.