FDOT Contacts:

Ezzeldin Benghuzzi, P.E
850-414-4352
Ezzeldin.Benghuzzi
@dot.state.fl.us

Stefanie D. Maxwell, P.E.
850-414-4314
Stefanie.Maxwell
@dot.state.fl.us

MOT AWARENESS
(Upcoming and Recent Updates)

Florida Department of Transportation

INDEX 600 SHEET 6

Effective Date 7/2014

GENERAL NOTES:

1. All signs shall be mounted per this Index when work operations exceed one day except for:
   a. Road closure signs mounted in accordance with the vendor drawing for the Type III Barricade shown on the APL.
   b. Pedestrian advanced warning or regulatory signs mounted on sign supports in accordance with the vendor drawing shown on the APL.
   c. Median barrier mounted signs per Index 11871.

TEMPORARY SIGN SUPPORT NOTE:

1. Signs mounted on temporary supports or barricades, and barricade/sign combination shall be crashworthy in accordance with NCHRP 350 requirements and included on the Approved Products List (APL).

POST MOUNTED SIGN NOTES:

1. Use only approved systems listed on the Department's

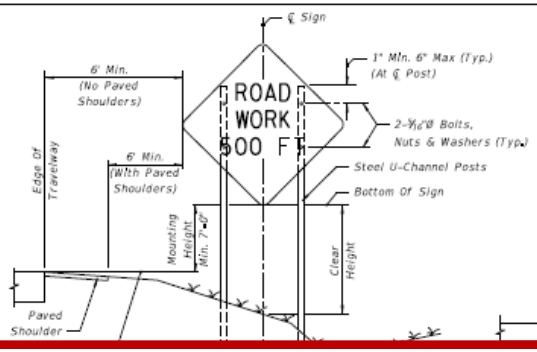

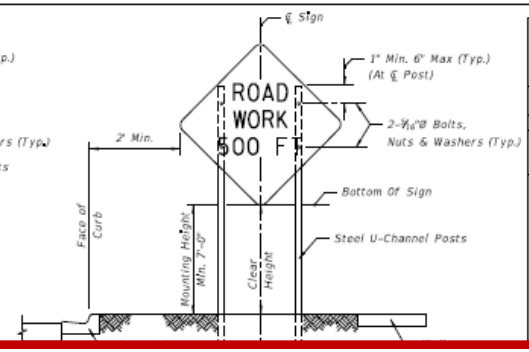

POST AND FOUNDATION TABLE FOR WORK ZONE SIGNS

SIGN SHAPE	SIGN SIZE (inches)	NUMBER OF STEEL U CHANNEL POSTS
Octagon	30x30	1
Triangle	36x36x36	1
	48x48x48	1
	60x60x60	2
Rectangle (W x H)	24x18	1
	24x30	1
	30x24	1
	36x18	1
	36x24	1
	48x18	1
	48x24	1
	36x48	2
	48x30	2
	48x36	2
	54x36	2
Diamond (See Note 6)	48x48	2
Circle	36Ø	2

Notes For Table:

1. Use 3 lb/ft posts for Clear Height up to 10' and 4 lb/ft posts for Clear Height up to 12'.

* Use 4 lb/ft U-channel sign post with a mounting height of 7' min. and 8' max. Attach sign panel using Z-bracket detail on Sheet 7.

2. Minimum foundation depth is 4.0' for 3 lb/ft posts and 4.5' for 4 lb/ft posts.
3. For both 3 lb/ft and 4 lb/ft base or sign posts installed in rock, a minimum cumulative depth of 2' of rock layer is required.
4. The soil plate as shown on the APL vendor drawing is not required for base posts or sign posts installed in existing rock (as defined in note 3), asphalt roadway, shoulder pavement or soil under sidewalk.

c. Median barrier mounted signs per Index 11871.

and detailed drawings showing the product meets all the requirements of this Index.

3. Provide 3 lb/ft Steel U-Channel Posts with a minimum section modulus of 0.43 in³ for 60 ksi steel, a minimum section modulus of 0.37 in³ for 70 ksi steel, or a minimum section modulus of 0.34 in³ for 80 ksi steel.
4. Provide 4 lb/ft Steel U-Channel Posts with a minimum section modulus of 0.56 in³ for 60 ksi steel, or a minimum section modulus of 0.47 in³ for 70 ksi or 80 ksi steel.
5. U-channel posts shall conform with ASTM A 499, Grade 60, or ASTM A 576, Grade 1080 (with a minimum yield strength of 60 ksi). Square tube posts shall conform with ASTM A 653, Grade 50, or ASTM A 1011, Grade 50.
6. Sign attachment bolts, washers, nuts and spacers shall conform with ASTM A307 or A 36.
7. For diamond warning signs with supplement plaque (up to 5 ft² in area), use 4 lb/ft posts for up to 10 ft Clear Height (measure to the bottom of diamond warning sign).
8. Install 4 lb/ft Steel U-Channel Posts with approved breakaway splice in accordance with the manufacturer's detail shown on the APL.
9. The contractor may install 3 lb/ft Steel U-Channel Posts with approved breakaway splice in accordance with the manufacturer's detail shown on the APL.
10. Install all posts plumb.
11. The contractor may set posts in preformed holes to the specified depth with suitable backfill tamped securely on all sides, or drive 3 lb/ft sign posts and any size base post in accordance with the manufacturer's detail shown on the APL.

2 POST SIGN SUPPORT MOUNTING DETAILS (SINGLE POST SIMILAR) RURAL

2 POST SIGN SUPPORT MOUNTING DETAILS (SINGLE POST SIMILAR) URBAN

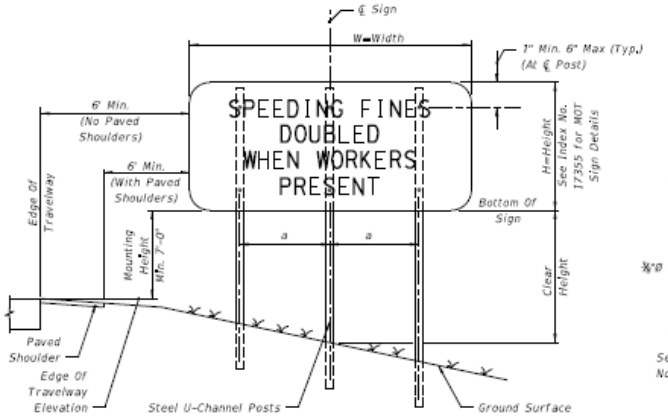

3 POST SIGN SUPPORT MOUNTING DETAILS

Where W = 48", a = 1' - 4½" (± 1")
W = 60", a = 1' - 9" (± 1")
W = 72", a = 2' - 1" (± 1")

WORK ZONE SIGN SUPPORTS

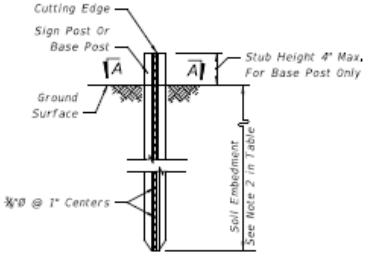

TYPICAL FOUNDATION DETAIL

See APL for post, splice and connection details.
No bolts installed closer than 1" to cutting edge.

SECTION A-A (SCHEMATIC)

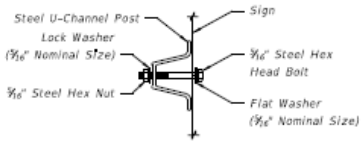

SIGN ATTACHMENT DETAIL (WITHOUT Z-BRACKET)

LAST REVISION	REVISION	DESCRIPTION:			INDEX NO.	SHEET NO.
05/30/14		Clarified Note #1; Deleted Note #2 from Design Notes; Added 48"x24" Sign Size and Number of Posts to the Post and Foundation Table.	FDOT 2014 DESIGN STANDARDS	GENERAL INFORMATION FOR TRAFFIC CONTROL THROUGH WORK ZONES	600	6 of 13

IDS FOR INDEX 11871

Effective Date 7/2014

Instructions for Design Standards (IDS)

		SIGNING AND MARKING	Roadway Contact		
11200		Multi-Column Ground Sign	IDS-11200		
11300		Steel Overhead Sign Structures			
11820		Span Sign Structure	IDS-11820	SEE-11820	
11860		Single Column Ground Signs	IDS-11860		
11861		Single Column Cantilever Ground Mounted Sign			
11862		Roadside Flashing Beacon Assembly			
11870		Single Post Bridge Mounted Sign Support	IDS-11870		DGN-11870
11871		Single Post Median Barrier Mounted Sign Support	IDS-11871		
13417		Mounting Exit Number Panels to Highway Signs			
17347		Bicycle Markings			

Item No. 102- 62- Barrier Mounted Work Zone Sign – per each per day

Use ***Design Standards*** Index 600 to layout sign locations in the plans. ***Design Standards*** Index 600 requires signs to be post mounted. When post mounted criteria cannot be met, the Designer must use ***Design Standards*** Index 11871, show the location of the barrier mounted signs in the plans, and include the pay item for barrier mounted work zone signs. However, to reduce the amount of barrier mounted work zone signs, modify the sign spacing as allowed by Index 600.

Index 11871 Single Post Median Barrier Mounted Sign Support

Effective Date 7/2014

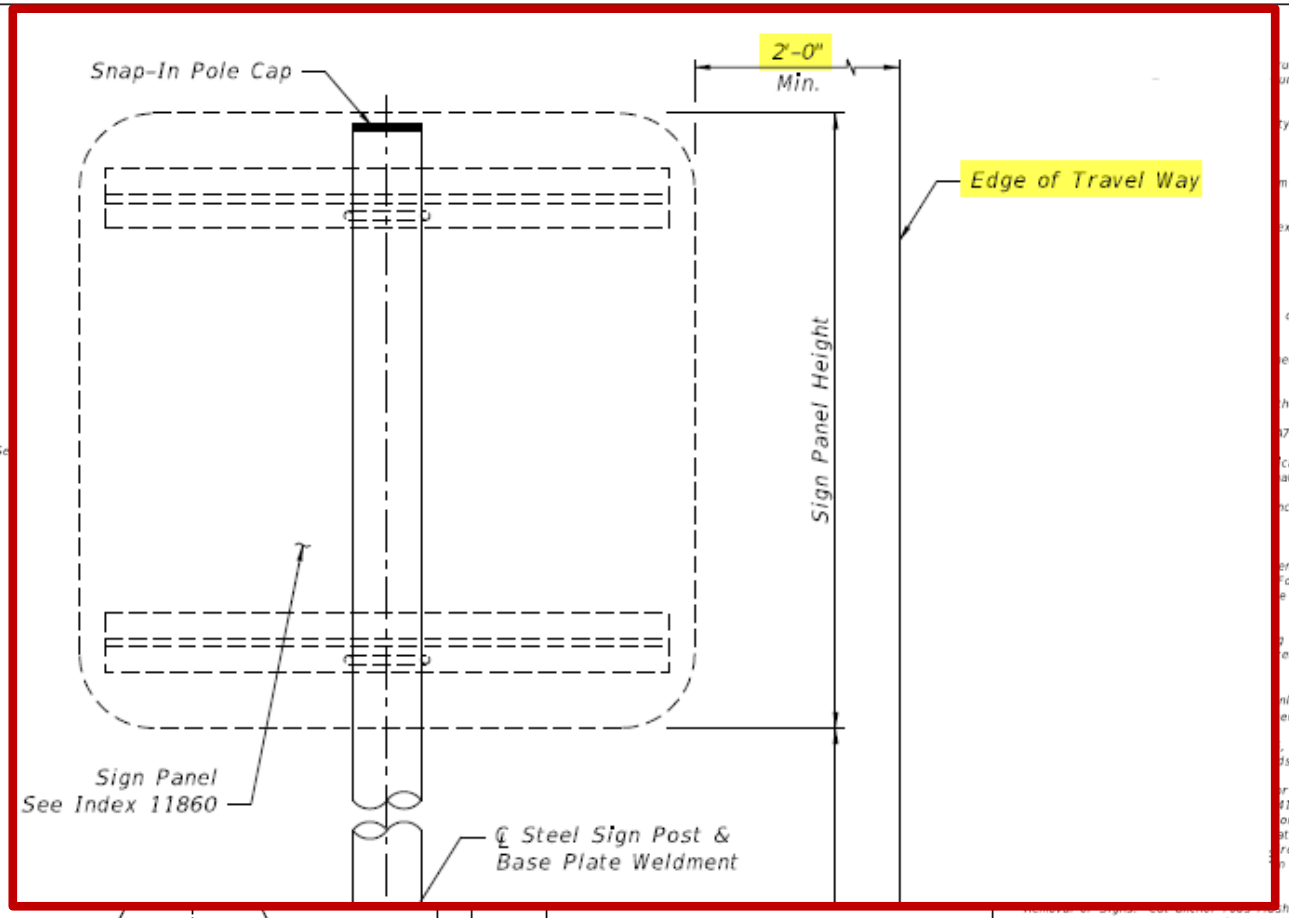

LOOKING PARALLEL TO DIRECTION OF TRAFFIC

LOOKING PERPENDICULAR TO DIRECTION OF TRAFFIC

ELEVATION

(Index 410 Standard "Full Wall" Median Barrier shown; others similar)

uctural Supports for Highway Signs, Luminaires and Traffic
ures Manual.

y" note.

m of 2'-0" clear from edge of adjacent Travel Way.

ex No 11860.

cost of the single post sign assembly.

edule 40 Steel Pipe, sized per Table 1. Maximum post length is

her-resistant glass-filled polyester cap.

709 Grade 50.

can Welding Society Structural Welding Code (Steel), ANSI/DWS
aterial is E70XX. Nondestructive testing is not required.

ncluding fasteners, in accordance with Section 962. Galvanize

ent Median Barriers, locate Sign Support a minimum of 5'-0"
For installations on Temporary Barriers, locate Sign Support at
e segment. In all cases, shift locations as needed to avoid

must be structurally sound and free of cracks and spalls.
ete surface; grind any high spots to obtain a flat, smooth

nly, saw cut a ⅛" deep groove transversely across the top of
ent hole location.

, fully threaded rods with A563 or A194 single self-locking hex
ds per Table 2.

r rods using Type HSHV Adhesive Bonding Material System in
416 & 937. For temporary sign support installations, the use of
or locating steel in concrete is not required to locate existing
ation Section 416-4. For temporary sign support installations,
red. For permanent sign support installations, Specification
n of the following: Perform field test on only one anchor per

Minimum thickness of epoxy is 1/16" extending 2" beyond the location of steel.

TABLE 1 - SIGN PANEL AND POST SIZING

Wind Speed (MPH)	Max. Sign Area (SF)	Post Ø (NPS)
70 - All Temporary Signs	≤ 24	3.0"
110 & 130	< 13.5	3.0"
	13.5 < Sign < 20	3.5"
150	< 13.5	3.5"
	13.5 < Sign < 20	4.0"

LAST REVISION	REVISION	DESCRIPTION:			INDEX NO.	SHEET NO.
09/25/20		Revised Temporary Signs Max. Sign Area from <20 sf to ≤24 sf.	FDOT 2014 DESIGN STANDARDS	SINGLE POST MEDIAN BARRIER MOUNTED SIGN SUPPORT	11871	1 of 2

INDEX 600 SHEET 12

Effective Date 1/2013

Pedestrian Longitudinal Channelizing Devices (LCD)

12. For pedestrian longitudinal channelizing devices, the device shall have a minimum of 8" continuous detectable edging above the walkway. A gap not exceeding a height of 2" is allowed to facilitate drainage. The top surface of the device shall be a minimum height of 32" and have smooth connection points between the devices to facilitate hand trailing. The bottom and the top surface of the device shall be in the same vertical plane. If pedestrian drop-off protection is required, the device shall have a footprint or offset of at least 2', otherwise the device must be equipped with a pedestrian railing at 42" in height above the walkway and be anchored or ballasted to withstand a 200 lb load at the top of the device.

panel is mounted in accordance with the vendor drawing for the channelizing device shown on the QPL.

4. During hours of darkness, warning lights shall be used on LCDs, drums, vertical panels, Type I, Type II, Type III, and direction indicator barricades in accordance with 'Warning Lights' in Index No. 600.

5. Ballast shall not be placed on top rails or any striped rails or higher than 13" above the driving surface.

6. The direction indicator barricade may be used in tapers and transitions where specific directional guidance to drivers is necessary. If used, direction indicator barricades shall be used in series to direct the driver through the transition and into the intended travel lane.

7. The splicing of sheeting is not permitted on either channelizing devices or MOT signs.

11. For longitudinal channelizing devices (LCDs) less than 32" in height, the LCD shall be supplemented with approved fixed (surface mounted) channelizing devices (tubular markers, vertical panels, etc.) along the run of the LCD, at the ends, at 50' centers on tangents, and 25' centers on radii. The cost of the fixed supplemented channelizing devices shall be included in the cost of the LCD. LCDs less than 32" in height shall not be used for speeds greater than 45 mph.

12. For pedestrian longitudinal channelizing devices, the device shall have a minimum of 8" continuous detectable edging above the walkway. A gap not exceeding a height of 2" is allowed to facilitate drainage. The top surface of the device shall be a minimum height of 32" and have smooth connection points between the devices to facilitate hand trailing. The bottom and the top surface of the device shall be in the same vertical plane. If pedestrian drop-off protection is required, the device shall have a footprint or offset of at least 2', otherwise the device must be equipped with a pedestrian railing at 42" in height above the walkway and be anchored or ballasted to withstand a 200 lb load at the top of the device.

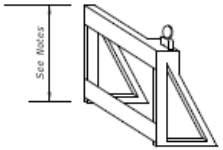

LONGITUDINAL CHANNELIZING DEVICE

IDENTIFICATIONS - CHANNELIZING AND LIGHTING DEVICES

LAST REVISION	REVISION	DESCRIPTION:		FDOT DESIGN STANDARDS 2013	GENERAL INFORMATION FOR TRAFFIC CONTROL THROUGH WORK ZONES	INDEX NO.	SHEET NO.
07/01/12						600	12

INDEX 600 SHEET 12

Effective Date 1/2013

Pedestrian Longitudinal Channelizing Devices (LCD)

Pedestrian Longitudinal Channelizing Devices

Index 600 Sheet 12

Effective Date 1/2013

Pedestrian Longitudinal Channelizing Devices (LCD)

Pedestrian Longitudinal Channelizing Devices

INDEX 600 SHEET 12

Effective Date 1/2013

Pedestrian Longitudinal Channelizing Devices (LCD)

Pedestrian Longitudinal Channelizing Devices

Index 600 Sheet 12

- Pedestrian Longitudinal Channelizing Devices (LCD)

Use of non-standard pedestrian channelization on bridge **[Index 600, Sheet 2 requires use of pedestrian channelizing device listed on the QPL].**

Index 600 Sheet 12

- Pedestrian Longitudinal Channelizing Devices (LCD)

- **Need advanced Signs.**

INDEX 600 SHEET 12

Effective Date 7/2014

Pedestrian Longitudinal Channelizing Devices (LCD)

Plans Preparation Manual (PPM): The last paragraph of Chapter 10.12.4.1, Pedestrian Requirements, will be revised as follows:

Signing and Pedestrian Longitudinal Channelizing Devices (LCDs) shall be used to channelize pedestrians safely through the work zone, in accordance with Indexes 600 and 660. Whenever pedestrians are detoured, at an intersection, midblock, onto a temporary walkway, etc., designers shall detail the pedestrian way in the Temporary Traffic Control Plans. The designer shall include quantities for pedestrian LCDs:

- At each closed sidewalk/pedestrian way location, for the full width of the sidewalk/pedestrian way.
- To delineate both sides of the path of a temporary walkway

PAY ITEM

102-74-5 Pedestrian Longitudinal Channelizing Device, per foot.

Payment:

Effective July 2014, Pedestrian Longitudinal Channelizing Devices will no longer be included in the per each per day payment for Channelizing Devices, pay item 102-74-1.They have a separate pay item number, 102-74-5 Pedestrian Longitudinal Channelizing Device, and will be paid per foot.

When a pedestrian LCD is required, whether a pedestrian ONLY or Pedestrian/Vehicular LCD is utilized, payment will be made as a pedestrian LCD, per foot.

Barrier Delineators

Effective Date 7/2014

Barrier Delineators

Effective Date 7/2014

July 1, 2014 letting

Description

- Yellow or White
- 3 inches wide by 4 inches high Sheeting
- Type IV or XI Sheeting

Placement

- On top of temporary barrier wall

Purpose

- Placed in a line to delineate the travelway

Index 600 Sheet 4

Effective Date 1/2015

Temporary Raised Rumble Strips

Two Types

- Removable Polymer Rumble Strip
- Molded Engineered Polymer Rumble Strip

INDEX 600 SHEET 4

Effective Date 1/2015

Removable Polymer Rumble Strip

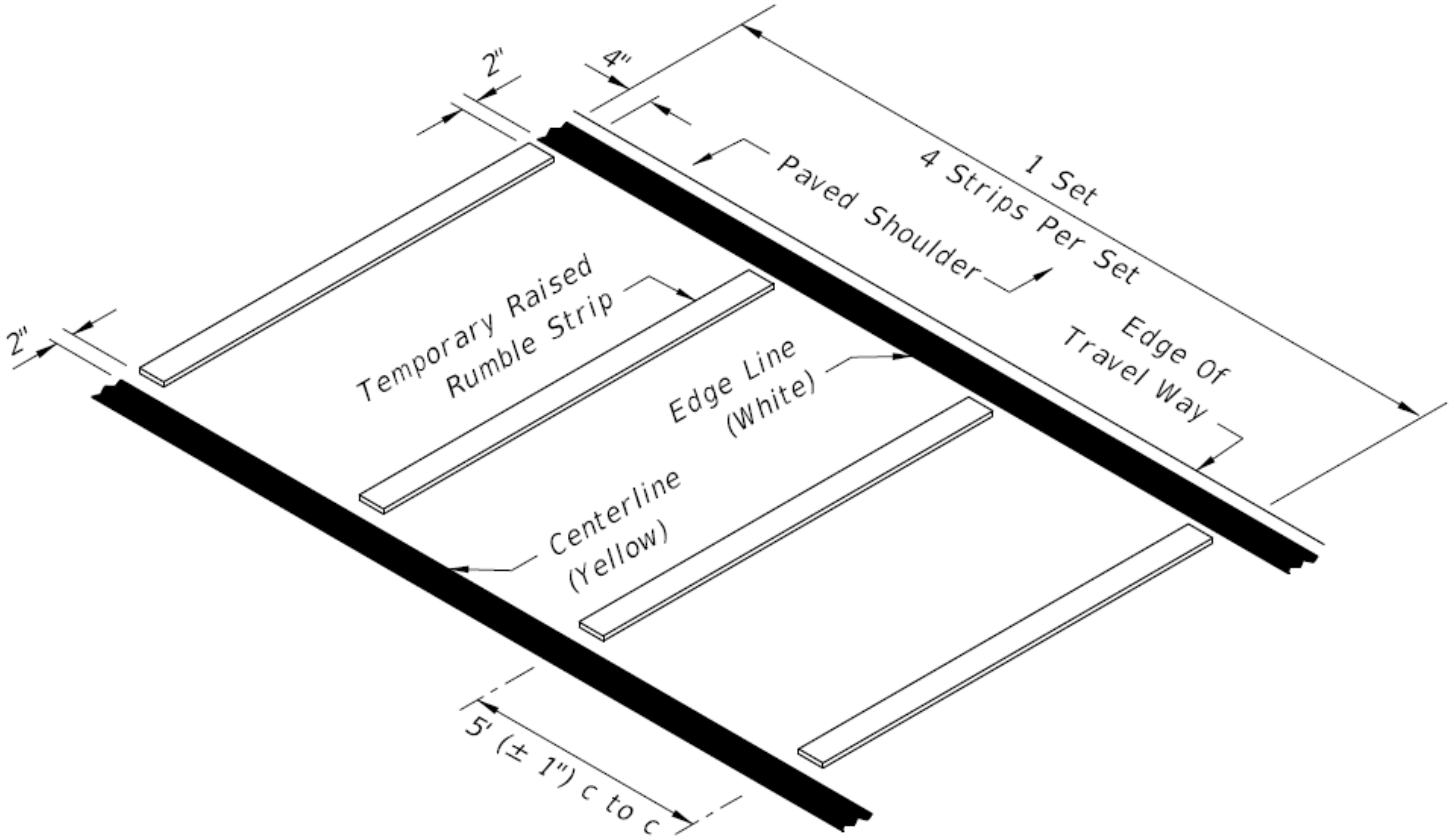

REMOVABLE POLYMER RUMBLE STRIP SET
(PAVED SHOULDER SHOWN)

Index 600 Sheet 4

Effective Date 1/2015

Removable Polymer Rumble Strip

INDEX 600 SHEET 4

Effective Date 1/2015

Removable Polymer Rumble Strip

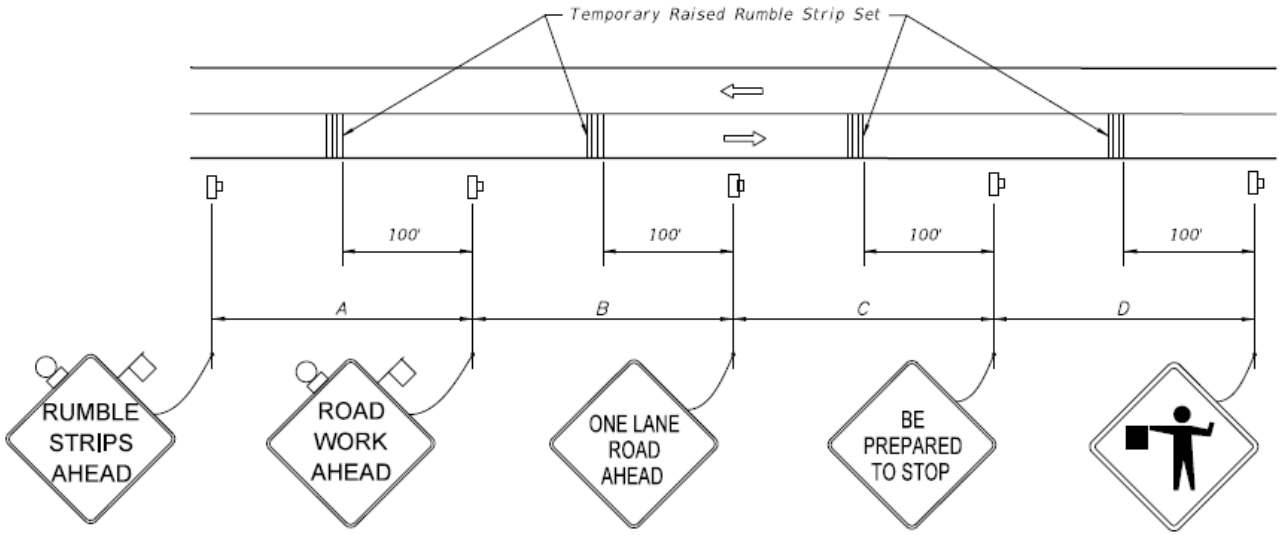

TYPICAL PLACEMENT OF TEMPORARY RAISED RUMBLE STRIPS

DISTANCE BETWEEN SIGNS				
Speed (mph)	Spacing (ft.)			
	A	B	C	D
50	500	500	500	250
55 or greater	500	1640	1000	500

INDEX 600 SHEET 4

Effective Date 1/2015

Molded Engineered Polymer Rumble Strip

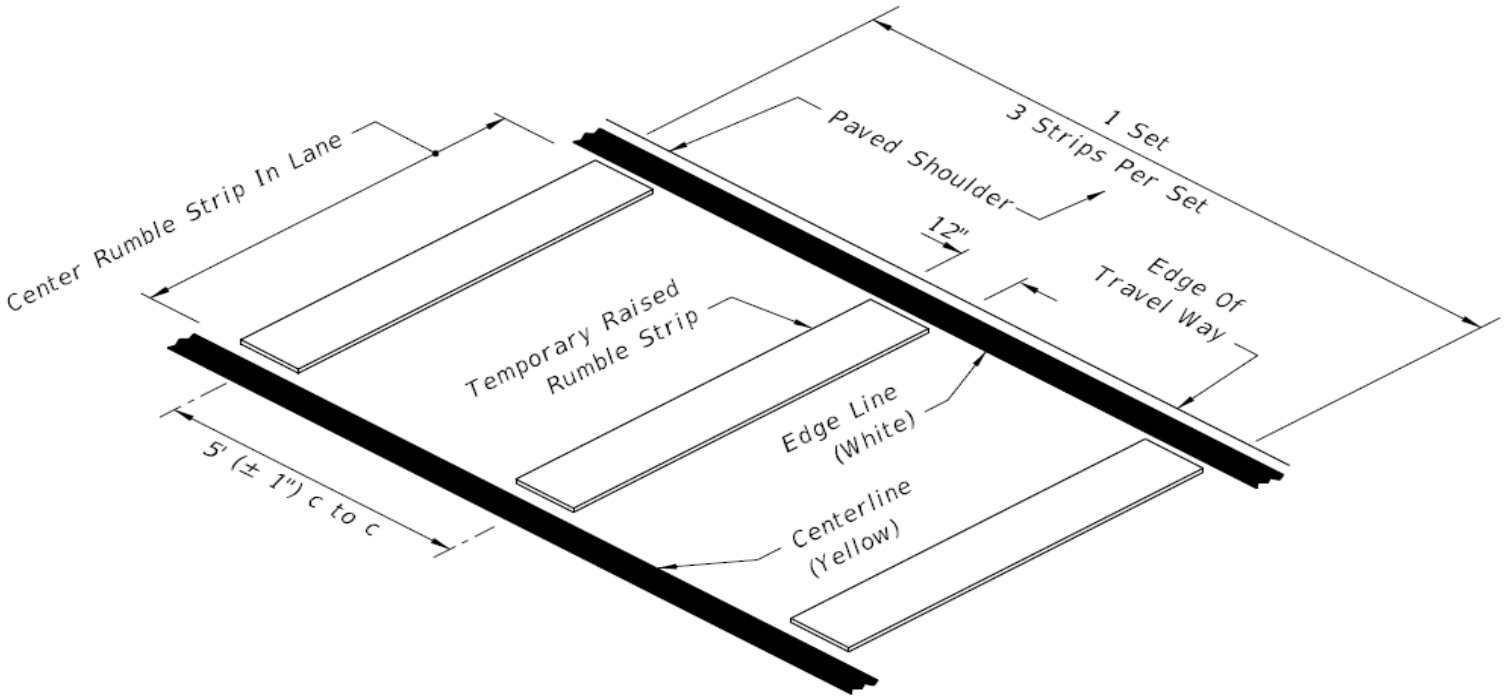

MOLDED ENGINEERED POLYMER RUMBLE STRIP SET
(PAVED SHOULDER SHOWN)

Index 600 Sheet 4

Effective Date 1/2015

Molded Engineered Polymer Rumble Strip

INDEX 600 SHEET 4

Effective Date 1/2015

Molded Engineered Polymer Rumble Strip

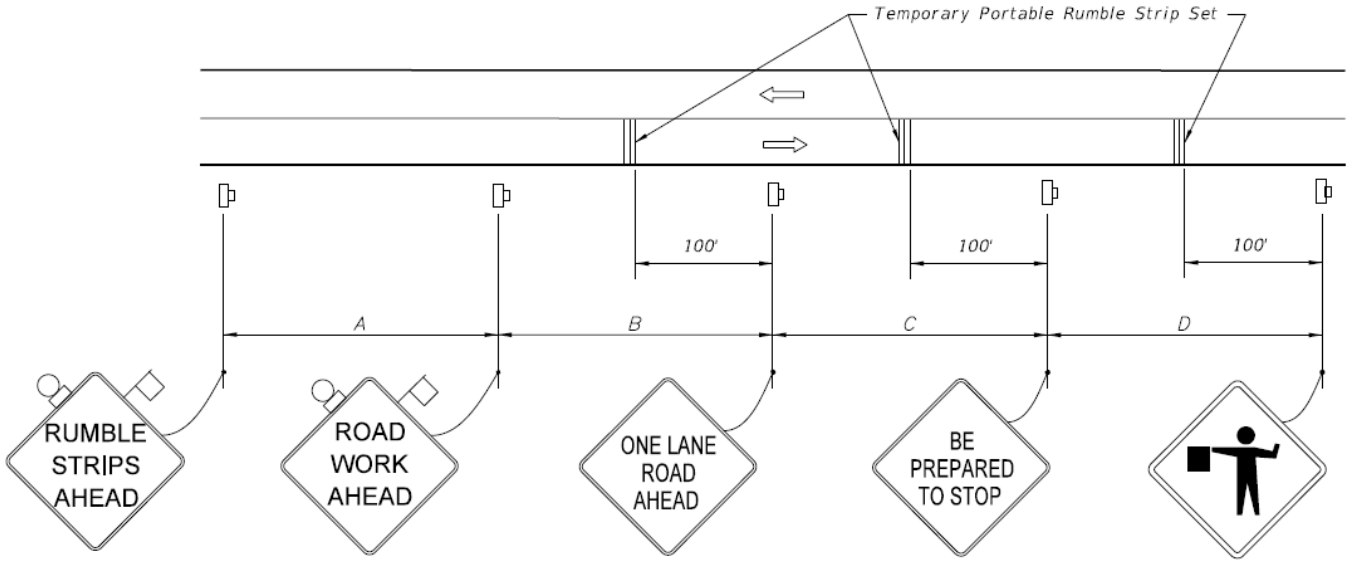

TYPICAL PLACEMENT OF TEMPORARY INTERNALLY BALLASTED RUMBLE STRIPS

DISTANCE BETWEEN SIGNS				
Speed (mph)	Spacing (ft.)			
	A	B	C	D
50	500	500	500	250
55 or greater	500	1640	1000	500

Index 600 Sheet 4

Effective Date 1/2015

Molded Engineered Polymer Rumble Strip

INDEX 600 SHEET 4

Effective Date 1/2015

PLAN PREPARATION MANUAL

10.12.16 Temporary Raised Rumble Strips

Temporary raised rumble strips alert motorists visually, audibly, and tactilely of the approaching work zone. Temporary raised rumble strips shall be required for all two lane, two way flagging operations with work zone speeds greater than 45 mph and work

102-909-	TEMPORARY RAISED RUMBLE STRIPS (Per Day Measurement)
	Unit DA Accuracy Day PlanQuantity? no
Notes	Effective with new specification- November 2013. Note unit of measure change.
Details	NOTE: Payment is ONE per day that rumble strips are used on a project, regardless of the number of sets used each day or the number of times installed or relocated in a day. All sets must meet the requirements of Index 600. Refer to the current specification for details.

PAY ITEM

102-909- Temporary Raised Rumble Strip Set - per day

Temporary Signalization and Maintenance

Effective Date 1/2012

Pay Item 102-104-

- Existing intersections – Verify that the number of days for the full duration of the contract is included for all existing intersections. Includes any modification to an existing intersection such as temporary poles, shifting of signal heads, etc.

SUMMARY OF TEMPORARY SIGNALIZATION & DETECTION													
PHASE	DURATION	102-104- TEMPORARY SIGNALIZATION & MAINTENANCE OF INTERSECTION, EACH DAY						102-107-1 TEMPORARY TRAFFIC DETECTION & MAINTENANCE OF INTERSECTION, EACH DAY					
		EXISTING			TEMPORARY			EXISTING			TEMPORARY/ NEW		
	DAYS	#	P	F	#	P	F	#	P	F	#	P	F
1	30	5	150					5	150				
2	60	5	300		1	60		5	300		1	60	
3	60	5	300		2	120		5	300		2	120	
4	30	5	150					5	150				
5	30	5	150					5	150				
		SUBTOTAL	1050			180			1050			180	
						TOTAL	1230					1230	

Example

Temporary Signalization and Maintenance

Effective Date 1/2012

Pay Item 102-104-

- Temporary intersections – If applicable, verify that the number of days a temporary intersection is required, is included. Temporary intersections are only applicable when a temporary signalized intersection is required where there was no existing intersection. The payment quantity will be adjusted by construction, beginning the day the temporary intersection is functional, and ending the day the temporary intersection is removed, or the day the new/permanent intersection is operational and the final lane configuration is in place.

SUMMARY OF TEMPORARY SIGNALIZATION & DETECTION

PHASE	DURATION	102-104- TEMPORARY SIGNALIZATION & MAINTENANCE OF INTERSECTION, EACH DAY						102-107-1 TEMPORARY TRAFFIC DETECTION & MAINTENANCE OF INTERSECTION, EACH DAY					
		EXISTING			TEMPORARY			EXISTING			TEMPORARY/ NEW		
	DAYS	#	P	F	#	P	F	#	P	F	#	P	F
1	30	5	150					5	150				
2	60	5	300		1	60		5	300		1	60	
3	60	5	300		2	120		5	300		2	120	
4	30	5	150					5	150				
5	30	5	150					5	150				
		SUBTOTAL	1050			180			1050			180	
						TOTAL	1230					1230	

Example

Temporary Signalization and Maintenance

Effective Date 1/2012

Pay Item 102-104-

- New intersections – Not applicable. No quantity is allowed for new intersections under this pay item. New intersections have their own pay items, and Specifications Section 611 details any performance issues with new intersections.

- Pay Quantity = 0 for new intersections

SUMMARY OF TEMPORARY SIGNALIZATION & DETECTION													
PHASE	DURATION	102-104- TEMPORARY SIGNALIZATION & MAINTENANCE OF INTERSECTION, EACH DAY						102-107-1 TEMPORARY TRAFFIC DETECTION & MAINTENANCE OF INTERSECTION, EACH DAY					
		EXISTING			TEMPORARY			EXISTING			TEMPORARY/ NEW		
	DAYS	#	P	F	#	P	F	#	P	F	#	P	F
1	30	5	150					5	150				
2	60	5	300		1	60		5	300		1	60	
3	60	5	300		2	120		5	300		2	120	
4	30	5	150					5	150				
5	30	5	150					5	150				
	SUBTOTAL		1050			180			1050			180	
	TOTAL					1230						1230	

Example

Temporary Detection and Maintenance

Effective Date 1/2012

Pay Item 102-107-1

- Existing intersections - Verify that the number of days for the full duration of the contract is included for all existing intersections. The payment quantity will be adjusted by construction, per the specification, "beginning the first day of the contract time and ending the day the permanent detection is operational and the final lane is in place."

SUMMARY OF TEMPORARY SIGNALIZATION & DETECTION

PHASE	DURATION	102-104- TEMPORARY SIGNALIZATION & MAINTENANCE OF INTERSECTION, EACH DAY						102-107-1 TEMPORARY TRAFFIC DETECTION & MAINTENANCE OF INTERSECTION, EACH DAY					
		EXISTING			TEMPORARY			EXISTING			TEMPORARY/ NEW		
	DAYS	#	P	F	#	P	F	#	P	F	#	P	F
1	30	5	150					5	150				
2	60	5	300		1	60		5	300		1	60	
3	60	5	300		2	120		5	300		2	120	
4	30	5	150					5	150				
5	30	5	150					5	150				
	SUBTOTAL		1050			180			1050			180	
	TOTAL					1230						1230	

Example

Temporary Detection and Maintenance

Effective Date 1/2012

Pay Item 102-107-1

- Temporary intersections – If applicable, verify that the number of days the temporary detection is required for a temporary intersection, is included. The payment quantity will be adjusted by construction, per the specification, "beginning the day the temporary detection is functional and ending the day temporary detection is removed from the temporary intersection."

SUMMARY OF TEMPORARY SIGNALIZATION & DETECTION													
PHASE	DURATION	102-104- TEMPORARY SIGNALIZATION & MAINTENANCE OF INTERSECTION, EACH DAY						102-107-1 TEMPORARY TRAFFIC DETECTION & MAINTENANCE OF INTERSECTION, EACH DAY					
		EXISTING			TEMPORARY			EXISTING			TEMPORARY/ NEW		
	DAYS	#	P	F	#	P	F	#	P	F	#	P	F
1	30	5	150					5	150				
2	60	5	300		1	60		5	300		1	60	
3	60	5	300		2	120		5	300		2	120	
4	30	5	150					5	150				
5	30	5	150					5	150				
	SUBTOTAL		1050			180			1050			180	
	TOTAL					1230						1230	

Example

Temporary Detection and Maintenance

Effective Date 1/2012

Pay Item 102-107-1

- New intersections – If applicable, verify that the number of days the temporary detection is required for a new intersection, is included. The payment quantity will be adjusted by construction, per the specification, "beginning the day the temporary detection is functional and ending the day the permanent detection is operational and the final lane configuration is in place.

SUMMARY OF TEMPORARY SIGNALIZATION & DETECTION													
PHASE	DURATION	102-104- TEMPORARY SIGNALIZATION & MAINTENANCE OF INTERSECTION, EACH DAY						102-107-1 TEMPORARY TRAFFIC DETECTION & MAINTENANCE OF INTERSECTION, EACH DAY					
		EXISTING			TEMPORARY			EXISTING			TEMPORARY/ NEW		
	DAYS	#	P	F	#	P	F	#	P	F	#	P	F
1	30	5	150					5	150				
2	60	5	300		1	60		5	300		1	60	
3	60	5	300		2	120		5	300		2	120	
4	30	5	150					5	150				
5	30	5	150					5	150				
	SUBTOTAL		1050			180			1050			180	
	TOTAL					1230						1230	

Example

Temporary Signalization & Detection

Effective Date 1/2012

SUMMARY OF TEMPORARY SIGNALIZATION & DETECTION													
PHASE	DURATION	102-104- TEMPORARY SIGNALIZATION & MAINTENANCE OF INTERSECTION, EACH DAY						102-107-1 TEMPORARY TRAFFIC DETECTION & MAINTENANCE OF INTERSECTION, EACH DAY					
		EXISTING			TEMPORARY			EXISTING			TEMPORARY/ NEW		
	DAYS	#	P	F	#	P	F	#	P	F	#	P	F
1	30	5	150					5	150				
2	60	5	300		1	60		5	300		1	60	
3	60	5	300		2	120		5	300		2	120	
4	30	5	150					5	150				
5	30	5	150					5	150				
	SUBTOTAL		1050			180			1050			180	
	TOTAL					1230						1230	

Example

Questions ?????????????????