# Florida Department of Transportation

RICK SCOTT
GOVERNOR

605 Suwannee Street
Tallahassee, FL 32399-0450

JIM BOXOLD
SECRETARY


August 18, 2015

**ADDENDUM NO. 1**

**To: ALL DESIGN BUILD FIRMS**

**FINANCIAL ITEM NUMBER: 218605-6-52-01 & 218605-7-52-01**
**CONTRACT NUMBER: E3O54**
**DESCRIPTION: Design Build SR 10 (US 90A/Nine Mile Rd.) Multilane from CR 99 (Beulah Rd.) to SR 297 (Pine Forest Rd.), Escambia County**

---

PROPOSALS TO BE RECEIVED: Wednesday, October 27, 2015

This is your authorization to make the following changes to the Request for Proposal package you now have for the subject project:

**Attached for your use is a redline revision to the Final RFP document previously distributed. The following is a summary of the revisions:**

**Attachments list**

- **Added future 6-lane typical section**
- **West Woods Haven Appt. Median Opening Sketch**

**Section I. Introduction, Description of Work**

- **Added typical section package information regarding the Value Engineering Study**
- **Added median opening requirement for future development**

**Section V. Project Requirements and Provisions for Work, Subsection B. Innovative Aspects, Item No. 1 Alternative Technical Concept (ATC) Proposals**

- **Added typical section package to the ATC list**

**Attachments**

- **Revised pavement design – updated FPIDs and revised shoulder requirements**
- **Revised Typical Section Package – revised typical section limits, added full depth base under some paved shoulders, revised inside shoulder width, revised labels for typical section I-10 bridges, and revised friction course limits on ramps. Other minor changes as well.**
- **Future six-lane typical section**
- **West Woods Haven Apartment Median Opening Sketch**

Please use this information when preparing your proposal.

All PROPOSAL HOLDERS please acknowledge receipt of the addendum on the Design Build Proposal of form (form no. 375-020-12), in the space provided.

Sincerely,

for Richard Norris
District Contracts Administrator

RN: rd
cc: Kerrie Harrell, File

Please sign below to acknowledge receipt of Addendum No.1.

**Acknowledged by:**_____

**FLEXIBLE PAVEMENT DESIGN SUMMARY SHEET**

Prepared By: _____ Date: Aug. 17, 2015

Charles Dunn, P.E.#11022 **REVISED DESIGN**

| | | | |
|---|---|---|---|
| FPID Number: | 218605-4,6,7 | U.S.. SR No. | SR 10US 90A |
| Section Number: | 48010 | Type Work: | New Const. |
| County: | Escambia | Project Length: | 6.299 miles |
| | | Mile Posts: | 2.000-8.299 |

**Description: Nine Mile Road (US 90A), Mobile Highway to Pine Forest Re**

Date of Last Resurfacing: NA

**EXISTING PAVEMENT:**

See following sheets

**DESIGN DATA:**

| | |
|---|---|
| Year of Opening: | 2020 |
| Design Year: | 2039 |
| Loading | See attached |
| Reliability(%): | 90 |
| Std. Deviation: | 0.45 |
| Resil. Mod (Mr): | 13,000 psi* |
| Change in PSI: | 1.7 |
| Required SN: | See attached |

*From 416940

**RECOMMENDED PAVEMENT DESIGN:**

See attached sheets

**NOTES:**

1. Use PG 76-22 in all asphalt mixes and static compaction only.
2. It is possible that water table information may change the pavement designs.

| FDOT Approved By: | Concurrence By: | FHWA Approval: |
|---|---|---|
| _____ | _____ | _____ |
| Date: | Date: | Date: |

**EXISTING PAVEMENT:**

MP 2.0 - MP 3.5 Westbound:

| | | |
|---|---|---|
| 12" Stabilized Subgrade @ 0.96 | | 0.96 |
| 8" Sand Clay Base @ 0.12 | | 0.96 |
| Surface Treatment | | 0 |
| 2" Type II @ 0.15 | | 0.3 |
| 1" Type S @ 0.25 | | 0.25 |
| 1 1/2" Type SP @ 0.34 | | 0.51 |
| 1" FC 9.5 @ 0.25 | | 0.25 |
| Existing SN | = | 3.23 |

MP 2.0 - MP 3.5 Eastbound:

| | | |
|---|---|---|
| 12" Stabilzided Subgade @ 0.08 | | 0.96 |
| 7 1/2" SAHM @ 0.11 | | 0.82 |
| 2 1/2" Type S @ 0.25 | | 0.62 |
| 1 1/2" Type SP @ 0.34 | | 0.51 |
| 1" FC 9.5 @ 0.25 | | 0.25 |
| Existing SN | = | 3.16 |

MP 3.5 - MP 5.8

| | | |
|---|---|---|
| 12" Stabilized Subgrade @ 0.08 | | 0.96 |
| 8" Sand Clay Base @ 0.12 | | 0.96 |
| Surface Treatment | | 0 |
| 1 3/4" Type I @ 0.23 | | 0.4 |
| 1/2" Type II @ 0.15 | | 0.07 |
| 1" Type S @ 0.25 | | 0.25 |
| 1 1/2" Type SP @ 0.34 | | 0.51 |
| 1" FC 9.5 @ 0.25 | | 0.25 |
| Existing SN | = | 3.4 |

Charles Dunn, P.E.
Fla. Reg. #11022

**EXISTING PAVEMENT, CONT.:**

MP 5.8 - 8.3

| | | |
|---|---|---|
| 12" Stabilized Subgrade @ 0.08 | | 0.96 |
| 8" Sand Clay Base @ 0.12 | | 0.96 |
| Surface Treatment | | 0 |
| 1" Type S @ 0.25 | | 0.25 |
| 1 1/2' Type SP @ 0.34 | | 0.51 |
| 1" FC 9.5 @ 0.25 | | 0.25 |
| Existing SN | = | 2.93 |

**RECOMMENDED PAVEMENT DESIGNS:**

MP 2.3 - 3.5

Loading = 3.2 mil ESALs, Required SN = 3.41

MP 3.5 - 5.8:

Loading = 3.9 mil ESALs, Required SN = 3.51

MP 5.8 - 7.5:

Loading = 5.1 mil ESALs, Required SN = 3.69

MP 7.5 - 8.3:

Loading = 5.5 mil ESALs, Required SN = 3.73

Rural Resurfacing:

Roadway, MP 2.0 - 3.5

| | | |
|---|---|---|
| Mill 1 1/2" | | -0.42 |
| 1 1/2" Type SP, Traffic Level C | | 0.66 |
| 3/4" FC - 5 | | 0 |
| Additional SN | = | 0.24 |
| | + | 3.16 |
| SN Provided | = | 3.4 |

Roadway, MP 3.5 - 5.8:

| | | |
|---|---|---|
| Mill 1 1/2" | | -0.42 |
| | - | 0.66 |
| 3/4" FC - 5 | | 0 |
| Additional SN | = | 0.24 |
| | + | 3.4 |
| SN Provided | = | 3.58 |

Shoulders:

Mill 1 1/2"

1 1/2" Type SP, Traffic Level C

3/4" FC - 5

Charles Dunn, PE, Fla. Reg. #11022

**RECOMMENDED PAVEMENT DESIGNS, CONT.**

Rural New Construction, MP 2.0 -MP 5.8:

Roadway:

| | | |
|---|---|---|
| 12" Stabilized Subgrade | | 0.96 |
| OBG-9 | | 1.8 |
| 3" Type SP, Traffic Level C | | 1.32 |
| 3/4" FC - 5 | | 0 |
| SN Provided | = | 4.08 |

Normal Shoulders:

12" Stabilized Subgrade
OBG-1
1 1/2" Type SP, TL C
3/4" FC - 5

Full Depth Shoulders:

12" Stabilized Subgrade
OBG-9
3" Type SP, Traffic Level C
3/4" FC - 5

Urban New Construction, MP 5.8 - MP 8.3:

| | | |
|---|---|---|
| 12" Stabilized Subgrade | | 0.96 |
| OBG - 9 | | 1.8 |
| 2 1/2" Type SP, Traffic Level C | | 1.1 |
| 1" FC 9.5, Traffic Level C | | 0.44 |
| SN Provided | = | 4.3 |

_____

Charles Dunn, P.E., Fla Reg.*11022

# STATE OF FLORIDA
# DEPARTMENT OF TRANSPORTATION

# TYPICAL SECTION PACKAGE

FINANCIAL PROJECT ID 218605-4-22-01

ESCAMBIA COUNTY (48010000)

MAJOR REEVALUATION FOR STATE ROAD 10 (US 90A, NINE MILE ROAD)
FROM SR 10A (US 90, MOBILE HIGHWAY) TO SR 297 (PINE FOREST ROAD)

R-32-W / R-31-W

TO CENTURY

TO MOBILE, AL

N.T.S

BEGIN PROJECT
STA. 149+00.00
MP 2.674

T-1-N / T-1-S

EQUATION:
STA. 287+87.85 BK =
STA. 278+86.58 AH

T-1-N / T-1-S

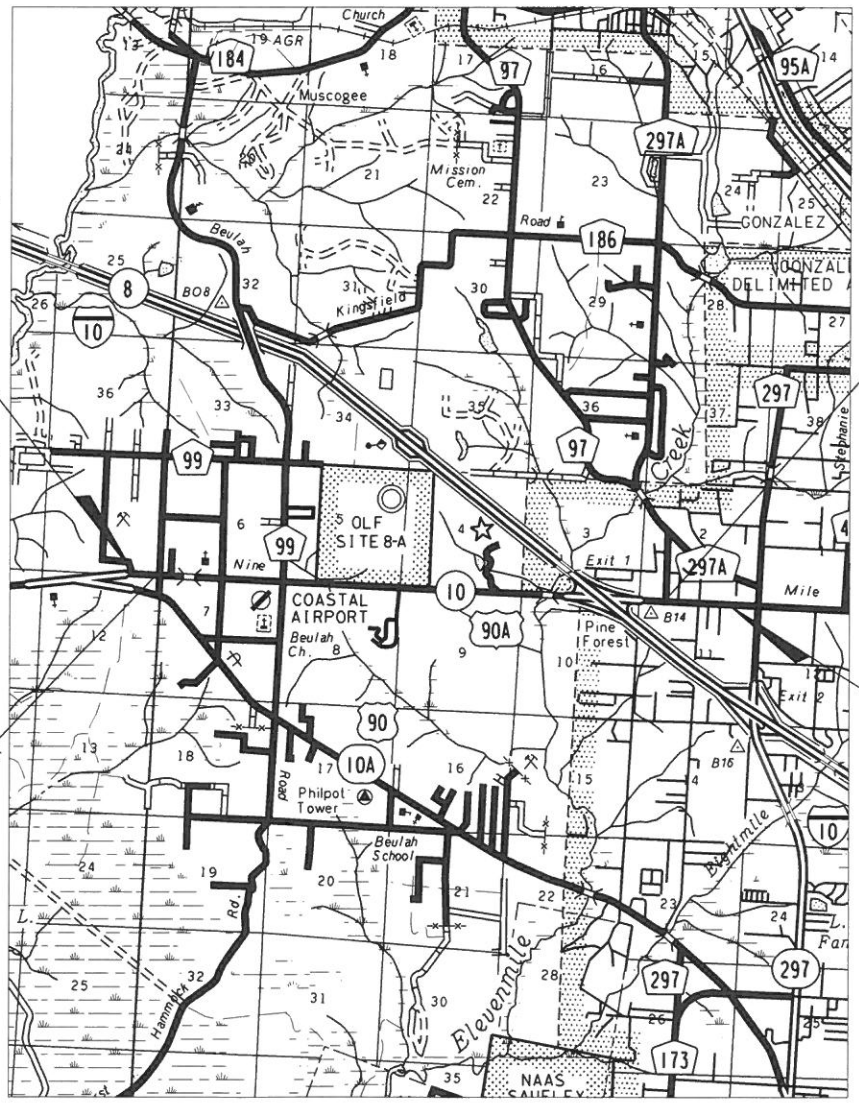


EQUATION:
STA. 181+08.51 BK =
STA. 53+24.03 AH

END PROJECT
STA. 313+12.14
MP 8.375

TO PENSACOLA

TO PENSACOLA

R-32-W / R-31-W

USER: 5turned 8/14/2015 10:20:31 AM F:\PROJECT\5133009\2186054220\roadway\TYPDRD01.DGN

# PROJECT IDENTIFICATION

FINANCIAL PROJECT ID 218605-4-22-01 COUNTY (SECTION) Escambia (48010000)

PROJECT DESCRIPTION Major Reevalutaion for SR 10 (US 90A, Nine Mile Rd.) from SR 10A (US 90, Mobile Hwy.) to SR 297 (Pine Forest Rd.)

# PROJECT CONTROLS

## FUNCTIONAL CLASSIFICATION

(X) RURAL
( ) URBAN

( ) FREEWAY/EXPWY. ( ) MAJOR COLL.
( ) PRINCIPAL ART. ( ) MINOR COLL.
(X) MINOR ART. ( ) LOCAL

## HIGHWAY SYSTEM

| Yes | No | |
|---|---|---|
| ( ) | (X) | NATIONAL HIGHWAY SYSTEM |
| ( ) | (X) | FLORIDA INTRASTATE HIGHWAY SYSTEM |
| ( ) | (X) | STRATEGIC INTERMODAL SYSTEM |
| (X) | ( ) | STATE HIGHWAY SYSTEM |
| ( ) | (X) | OFF STATE HIGHWAY SYSTEM |

## ACCESS CLASSIFICATION

( ) 1 - FREEWAY
( ) 2 - RESTRICTIVE w/Service Roads
(X) 3 - RESTRICTIVE w/660 ft. Connection Spacing
( ) 4 - NON-RESTRICTIVE w/2640 ft. Signal Spacing
( ) 5 - RESTRICTIVE w/440 ft. Connection Spacing
( ) 6 - NON-RESTRICTIVE w/1320 ft. Signal Spacing
( ) 7 - BOTH MEDIAN TYPES

## TRAFFIC

| | YEAR | AADT |
|---|---|---|
| CURRENT | 2013 | 9,800 |
| OPENING | 2030 | 11,000 |
| DESIGN | 2040 | 12,000 |

DESIGN SPEED 60
POSTED SPEED 55

DISTRIBUTION
K 9.0%
D 60.0%
$T_{24}$ 4.0%

DESIGN SPEED APPROVALS

DISTRICT DESIGN ENGINEER DATE

DISTRICT TRAFFIC OPERATIONS ENGINEER DATE

## CRITERIA

(X) NEW CONSTRUCTION / RECONSTRUCTION
( ) RRR INTERSTATE / FREEWAY
( ) RRR NON-INTERSTATE / FREEWAY
( ) TDLC / NEW CONSTRUCTION / RECONSTRUCTION
( ) TDLC / RRR
( ) MANUAL OF UNIFORM MINIMUM STANDARDS (FLORIDA GREENBOOK)(OFF-STATE HIGHWAY SYSTEM ONLY)

## LIST ANY POTENTIAL EXCEPTIONS AND VARIATIONS RELATED TO TYPICAL SECTION ELEMENTS:

None at this time

LIST MAJOR STRUCTURES LOCATION/DESCRIPTION - REQUIRING INDEPENDENT STRUCTURE DESIGN:

None at this time

LIST MAJOR UTILITIES WITHIN PROJECT CORRIDOR:

Power, Water, Sewer, Gas, Telephone, and Cable

LIST OTHER INFORMATION PERTINENT TO DESIGN OF PROJECT:

None at this time

# PROJECT IDENTIFICATION

FINANCIAL PROJECT ID 218605-4-22-01 FEDERAL AID PROJECT NO. N/A COUNTY NAME Escambia

SECTION NO. 48010000 ROAD DESIGNATION SR 10 LIMITS/MILEPOST MP 2.709 - MP 4.280

PROJECT DESCRIPTION Major Reevalutaion for SR 10 (US 90A, Nine Mile Road) from SR 10A (US 90, Mobile Highway) to SR 297 (Pine Forest Road)

# PROPOSED ROADWAY TYPICAL SECTION

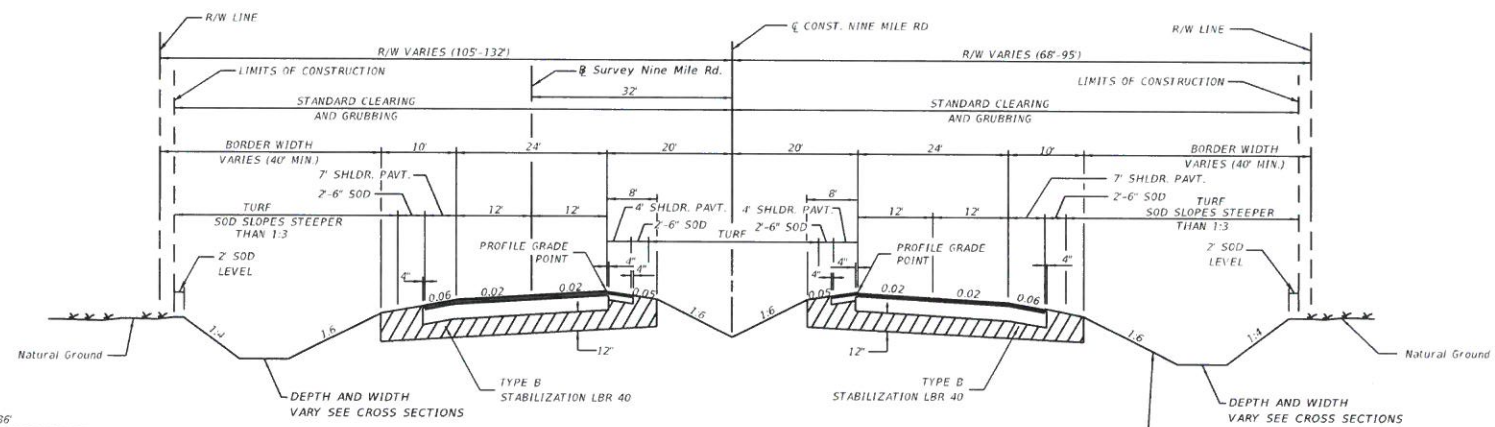


CLEAR ZONE = 36'
THE DESIGN CLEAR ZONE DOES NOT APPLY TO CLEAR ZONE WIDTHS FOR WORK ZONES

1:6 FOR FILLS TO 5'
1:6 TO EDGE OF CLEAR ZONE & 1:4 FOR FILLS 5' TO 10'
1:6 TO EDGE OF CLEAR ZONE & 1:3 FOR FILLS 10' TO 20'
1:2 (WITH GUARDRAIL) FOR FILLS OVER 20'

NOTE:
HEIGHT OF FILL IS THE VERTICAL DISTANCE FROM THE EDGE OF THE OUTSIDE TRAVEL LANE TO TOE OF FRONT SLOPE.

TYPICAL SECTION NO. 1
SR 10 (US 90A)
DESIGN SPEED = 60 MPH
POSTED SPEED = 55 MPH
RURAL

| APPROVED BY: Tracy D. Boutwell, PE | FDOT CONCURRENCE | FHWA CONCURRENCE |
|---|---|---|
| Tracy D. Boutwell 8/14/15<br>Engineer of Record Signature and Date | Jared W. Perdue, PE<br>FDOT District Design Engineer — Date | Printed Name<br>FHWA Transportation Engineer — Date |

TRACY D. BOUTWELL LICENSE No. 57670 STATE OF FLORIDA PROFESSIONAL ENGINEER

# PROJECT IDENTIFICATION

FINANCIAL PROJECT ID 218605-4-22-01 COUNTY (SECTION) Escambia (48010000)

PROJECT DESCRIPTION Major Reevalutalon for SR 10 (US 90A, Nine Mile Rd.) from SR 10A (US 90, Mobile Hwy.) to SR 297 (Pine Forest Rd.)

# PROJECT CONTROLS

## FUNCTIONAL CLASSIFICATION

( ) RURAL
(X) URBAN

( ) FREEWAY/EXPWY. ( ) MAJOR COLL.
( ) PRINCIPAL ART. ( ) MINOR COLL.
(X) MINOR ART. ( ) LOCAL

## HIGHWAY SYSTEM

| Yes | No | |
|---|---|---|
| ( ) | (X) | NATIONAL HIGHWAY SYSTEM |
| ( ) | (X) | FLORIDA INTRASTATE HIGHWAY SYSTEM |
| ( ) | (X) | STRATEGIC INTERMODAL SYSTEM |
| (X) | ( ) | STATE HIGHWAY SYSTEM |
| ( ) | (X) | OFF STATE HIGHWAY SYSTEM |

## ACCESS CLASSIFICATION

( ) 1 - FREEWAY
( ) 2 - RESTRICTIVE w/Service Roads
(X) 3 - RESTRICTIVE w/660 ft. Connection Spacing
( ) 4 - NON-RESTRICTIVE w/2640 ft. Signal Spacing
(X) 5 - RESTRICTIVE w/440 ft. Connection Spacing
( ) 6 - NON-RESTRICTIVE w/1320 ft. Signal Spacing
( ) 7 - BOTH MEDIAN TYPES

## TRAFFIC

| | YEAR | AADT |
|---|---|---|
| CURRENT | 2013 | 19,000 |
| OPENING | 2030 | 26,600 |
| DESIGN | 2040 | 31,100 |

12,000 DISTRIBUTION

DESIGN SPEED 55 K 9.0%
POSTED SPEED 45 D 60.0%
T 24 4.0%

DESIGN SPEED APPROVALS

DISTRICT DESIGN ENGINEER DATE

DISTRICT TRAFFIC OPERATIONS ENGINEER DATE

## CRITERIA

(X) NEW CONSTRUCTION / RECONSTRUCTION
( ) RRR INTERSTATE / FREEWAY
( ) RRR NON-INTERSTATE / FREEWAY
( ) TDLC / NEW CONSTRUCTION / RECONSTRUCTION
( ) TDLC / RRR
( ) MANUAL OF UNIFORM MINIMUM STANDARDS (FLORIDA GREENBOOK)(OFF-STATE HIGHWAY SYSTEM ONLY)

## LIST ANY POTENTIAL EXCEPTIONS AND VARIATIONS RELATED TO TYPICAL SECTION ELEMENTS:

Vertical Clearance
Median Width
Guardrail Offset
Buffered Bike Lane Width at Bridge Piers
Border Width

All variances/exceptions apply to vicinity of the I-10 interchange area.

LIST MAJOR STRUCTURES LOCATION/DESCRIPTION - REQUIRING INDEPENDENT STRUCTURE DESIGN:

Eleven Mile Creek Bridge

LIST MAJOR UTILITIES WITHIN PROJECT CORRIDOR:

Power, Water, Sewer, Gas, Telephone, and Cable

LIST OTHER INFORMATION PERTINENT TO DESIGN OF PROJECT:

Access Class 3 limits: MP 4.282 to MP 6.809
Access Class 5 limits: MP 6.809 to MP 8.299

# PROJECT IDENTIFICATION

FINANCIAL PROJECT ID 218605-4-22-01 | FEDERAL AID PROJECT NO. N/A | COUNTY NAME Escambia

SECTION NO. 48010000 | ROAD DESIGNATION SR 10 | LIMITS/MILEPOST MP 4.280 - MP 6.498, MP 6.556 - MP 6.809, MP 7.257 - MP 8.375

PROJECT DESCRIPTION Major Reevalutaion for SR 10 (US 90A, Nine Mile Road) from SR 10A (US 90, Mobile Highway) to SR 297 (Pine Forest Road)

# PROPOSED ROADWAY TYPICAL SECTION

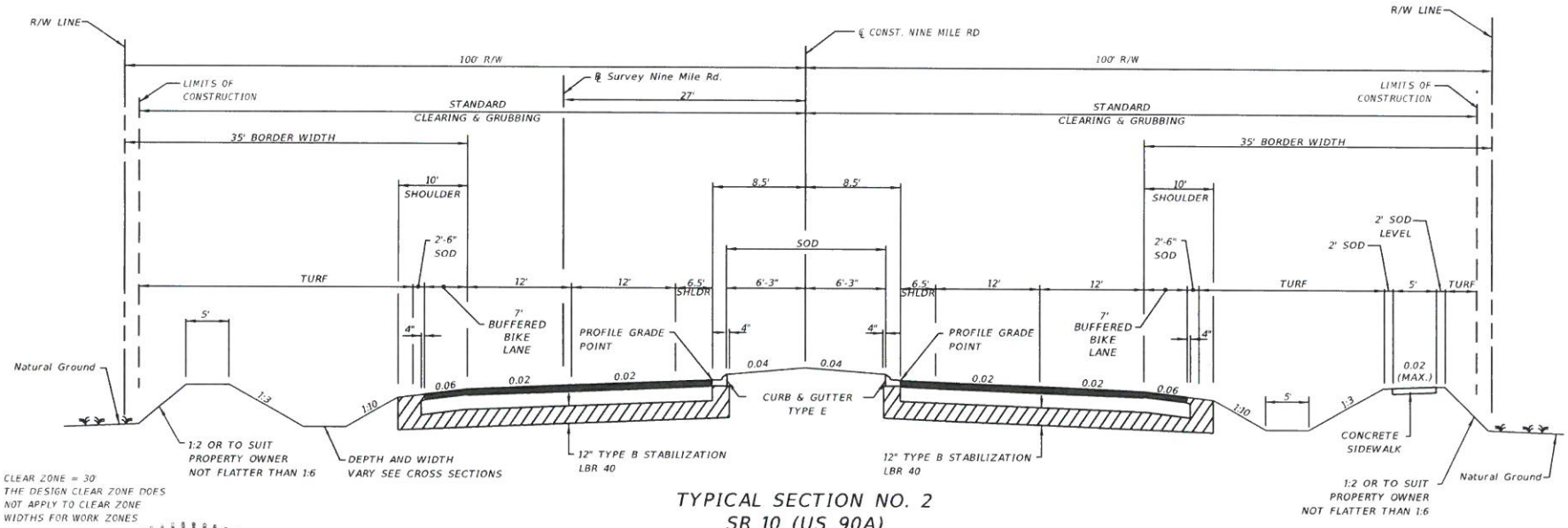


TYPICAL SECTION NO. 2
SR 10 (US 90A)
DESIGN SPEED = 55 MPH
POSTED SPEED = 45 MPH
SUBURBAN

| APPROVED BY: Tracy D. Boutwell, PE | FDOT CONCURRENCE | FHWA CONCURRENCE |
|---|---|---|
| Tracy D. Boutwell 8/14/15<br>Engineer Of Record Signature and Date | Jared W. Perdue, PE<br>FDOT District Design Engineer — Date | Printed Name<br>FHWA Transportation Engineer — Date |

TRACY D. BOUTWELL LICENSE No. 57670 STATE OF FLORIDA PROFESSIONAL ENGINEER

# PROJECT IDENTIFICATION

FINANCIAL PROJECT ID 218605-4-22-01 FEDERAL AID PROJECT NO. N/A COUNTY NAME Escambia

SECTION NO. 48010000 ROAD DESIGNATION SR 10 LIMITS/MILEPOST MP 6.809 - MP 7.257

PROJECT DESCRIPTION Major Reevalutalon for SR 10 (US 90A, Nine Mile Road) from SR 10A (US 90, Mobile Highway) to SR 297 (Pine Forest Road)

# PROPOSED ROADWAY TYPICAL SECTION

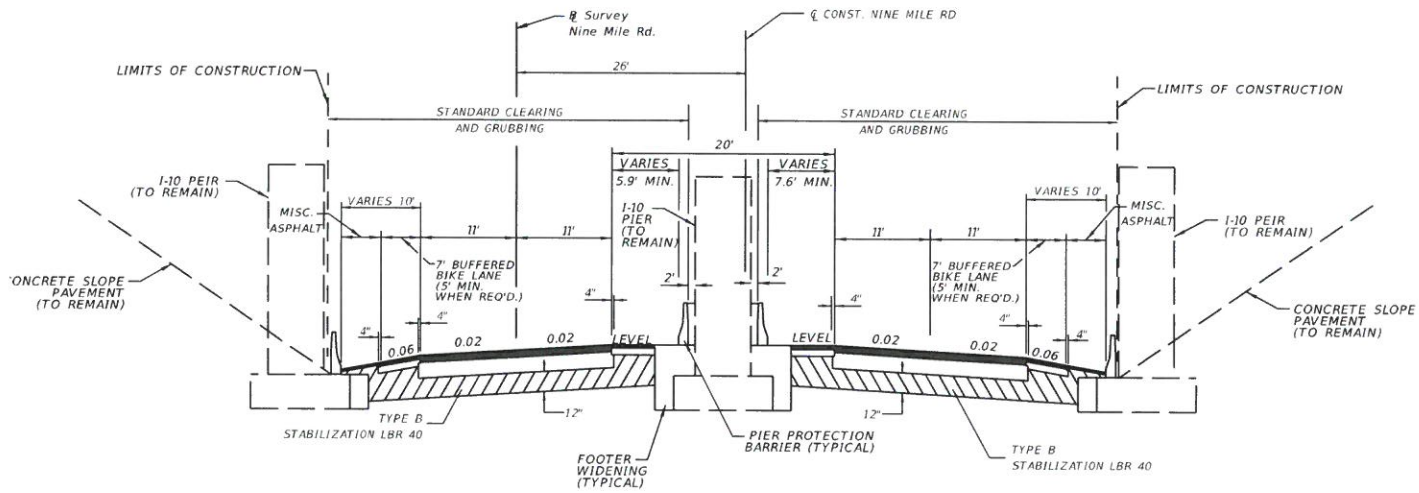


TYPICAL SECTION NO. 3
SR 10 (US 90A)
DESIGN SPEED = 55 MPH
POSTED SPEED = 45 MPH
SUBURBAN

| APPROVED BY: Tracy D. Boutwell, PE | FDOT CONCURRENCE | FHWA CONCURRENCE |
|---|---|---|
| Tracy D. Boutwell 8/14/15<br>Engineer Of Record Signature and Date | Jared W. Perdue, PE<br>FDOT District Design Engineer — Date | Printed Name<br>FHWA Transportation Engineer — Date |

TRACY D. BOUTWELL LICENSE No. 57670 STATE OF FLORIDA PROFESSIONAL ENGINEER

USER: 5turned 8/7/2015 9:10:56 AM F:\PROJECT\5133009\21860542201\roadway\TYPDRD01.DGN

# PROJECT IDENTIFICATION

FINANCIAL PROJECT ID 218605-4-22-01 FEDERAL AID PROJECT NO. N/A COUNTY NAME Escambia

SECTION NO. 48010000 ROAD DESIGNATION SR 10 LIMITS/MILEPOST MP 6.498 - MP 6.556

PROJECT DESCRIPTION Major Reevalutaion for SR 10 (US 90A, Nine Mile Road) from SR 10A (US 90, Mobile Highway) to SR 297 (Pine Forest Road)

# PROPOSED STRUCTURAL TYPICAL SECTION

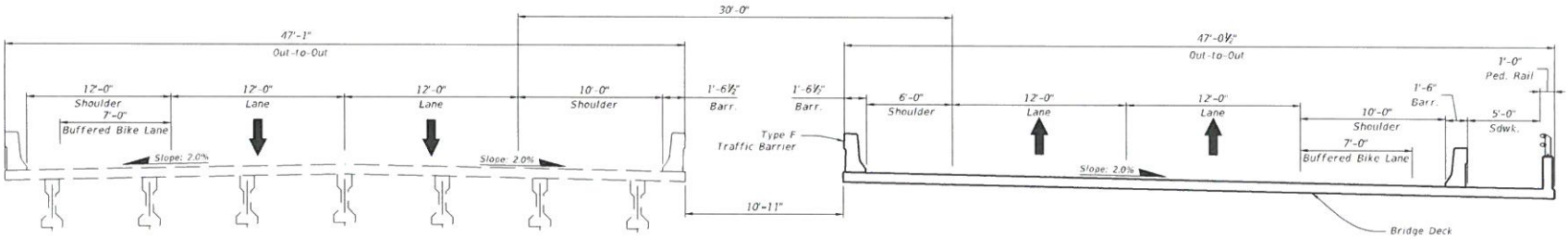


TYPICAL SECTION NO. 4
SR 10 (US 90A)
BRIDGE OVER ELEVEN MILE CREEK
DESIGN SPEED = 55 MPH
POSTED SPEED = 45 MPH
EXISTING BRIDGE NO. 01880

| APPROVED BY Tracy D. Boutwell, PE | FDOT CONCURRENCE | FHWA CONCURRENCE |
|---|---|---|
| Tracy D. Boutwell 8/14/15<br>Engineer Of Record Signature and Date | Jared W. Perdue, PE<br>FDOT District Design Engineer — Date | Printed Name<br>FHWA Transportation Engineer — Date |

TRACY D. BOUTWELL LICENSE No. 57670 STATE OF FLORIDA PROFESSIONAL ENGINEER

# PROJECT IDENTIFICATION

FINANCIAL PROJECT ID 218605-4-22-01 COUNTY (SECTION) Escambia (48260000)

PROJECT DESCRIPTION Major Reevalutalon for SR 10 (US 90A, Nine Mile Rd.) from SR 10A (US 90, Mobile Hwy.) to SR 297 (Pine Forest Rd.)

# PROJECT CONTROLS

## FUNCTIONAL CLASSIFICATION

( ) RURAL
X URBAN

| | | | |
|---|---|---|---|
| X | FREEWAY/EXPWY. | ( ) | MAJOR COLL. |
| ( ) | PRINCIPAL ART. | ( ) | MINOR COLL. |
| ( ) | MINOR ART. | ( ) | LOCAL |

## HIGHWAY SYSTEM

| Yes | No | |
|---|---|---|
| X | ( ) | NATIONAL HIGHWAY SYSTEM |
| X | ( ) | FLORIDA INTRASTATE HIGHWAY SYSTEM |
| X | ( ) | STRATEGIC INTERMODAL SYSTEM |
| X | ( ) | STATE HIGHWAY SYSTEM |
| ( ) | X | OFF STATE HIGHWAY SYSTEM |

## ACCESS CLASSIFICATION

X 1 - FREEWAY
( ) 2 - RESTRICTIVE w/Service Roads
( ) 3 - RESTRICTIVE w/660 ft. Connection Spacing
( ) 4 - NON-RESTRICTIVE w/2640 ft. Signal Spacing
( ) 5 - RESTRICTIVE w/440 ft. Connection Spacing
( ) 6 - NON-RESTRICTIVE w/1320 ft. Signal Spacing
( ) 7 - BOTH MEDIAN TYPES

## TRAFFIC

| | YEAR | AADT |
|---|---|---|
| CURRENT | 2013 | N/A |
| OPENING | 2030 | N/A |
| DESIGN | 2040 | N/A |

DESIGN SPEED 25-45
POSTED SPEED 25-45

DISTRIBUTION
K N/A %
D N/A %
$T_{24}$ N/A %

## CRITERIA

X NEW CONSTRUCTION / RECONSTRUCTION
( ) RRR INTERSTATE / FREEWAY
( ) RRR NON-INTERSTATE / FREEWAY
( ) TDLC / NEW CONSTRUCTION / RECONSTRUCTION
( ) TDLC / RRR
( ) MANUAL OF UNIFORM MINIMUM STANDARDS (FLORIDA GREENBOOK) (OFF-STATE HIGHWAY SYSTEM ONLY)

DESIGN SPEED APPROVALS

DISTRICT DESIGN ENGINEER DATE

DISTRICT TRAFFIC OPERATIONS ENGINEER DATE

## LIST ANY POTENTIAL EXCEPTIONS AND VARIATIONS RELATED TO TYPICAL SECTION ELEMENTS:

None at this time

## LIST MAJOR STRUCTURES LOCATION/DESCRIPTION - REQUIRING INDEPENDENT STRUCTURE DESIGN:

None at this time

## LIST MAJOR UTILITIES WITHIN PROJECT CORRIDOR:

Power, Water, Sewer, Gas, Telephone, and Cable - At SR 10 Intersection

## LIST OTHER INFORMATION PERTINENT TO DESIGN OF PROJECT:

None at this time

# PROJECT IDENTIFICATION

FINANCIAL PROJECT ID 218605-4-22-01 FEDERAL AID PROJECT NO. N/A COUNTY NAME Escambia

SECTION NO. 48260000 ROAD DESIGNATION SR 8 (I-10) LIMITS/MILEPOST MP 5.359- MP 5.743

PROJECT DESCRIPTION Major Reevalutaion for SR 10 (US 90A, Nine Mile Road) from SR 10A (US 90, Mobile Highway) to SR 297 (Pine Forest Road)

# PROPOSED ROADWAY TYPICAL SECTION

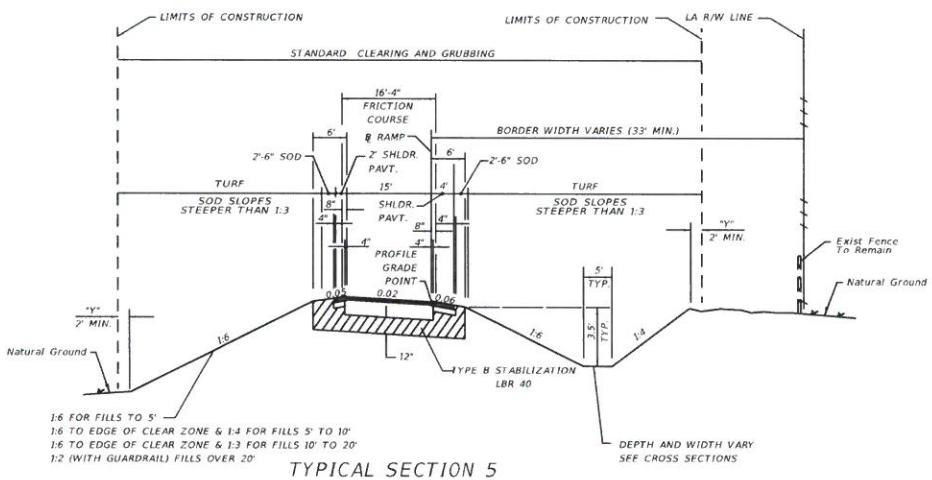


TYPICAL SECTION 5
SR 8 (I-10)
(SINGLE LANE RAMP)
EASTBOUND SR 10 TO SOUTHBOUND I-10
WESTBOUND SR 10 TO NORTHBOUND I-10
DESIGN SPEED = 25-45 MPH
POSTED SPEED = N/A

CLEAR ZONE = 14'
THE DESIGN CLEAR ZONE DOES NOT APPLY TO CLEAR ZONE WIDTHS FOR WORK ZONES

| APPROVED BY Tracy D. Boutwell, PE | FDOT CONCURRENCE | FHWA CONCURRENCE |
|---|---|---|
| Tracy D. Boutwell 8/14/15<br>Engineer Of Record Signature and Date | Jared W. Perdue, PE<br>FDOT District Design Engineer<br>Date | Printed Name<br>FHWA Transportation Engineer<br>Date |

TRACY D. BOUTWELL LICENSE No. 57676 STATE OF FLORIDA PROFESSIONAL ENGINEER

# PROJECT IDENTIFICATION

FINANCIAL PROJECT ID 218605-4-22-01 FEDERAL AID PROJECT NO. N/A COUNTY NAME Escambia

SECTION NO. 48260000 ROAD DESIGNATION SR 8 (I-10) LIMITS/MILEPOST MP 5.359- MP 5.743

PROJECT DESCRIPTION Major Reevalutaion for SR 10 (US 90A, Nine Mile Road) from SR 10A (US 90, Mobile Highway) to SR 297 (Pine Forest Road)

# PROPOSED ROADWAY TYPICAL SECTION

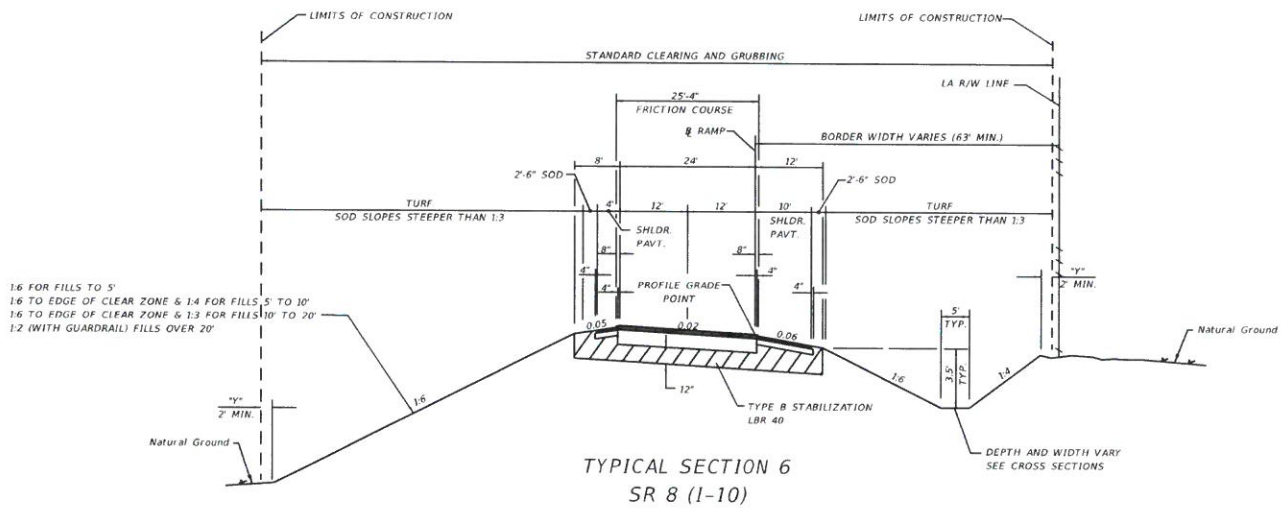


TYPICAL SECTION 6
SR 8 (I-10)
(TWO LANE RAMP)
SOUTHBOUND I-10 EXIT RAMP
DESIGN SPEED = 25-45 MPH
POSTED SPEED = N/A

CLEAR ZONE = 24'
THE DESIGN CLEAR ZONE DOES NOT APPLY TO CLEAR ZONE WIDTHS FOR WORK ZONES

| APPROVED BY: Tracy D. Boutwell, PE | FDOT CONCURRENCE | FHWA CONCURRENCE |
|---|---|---|
| Tracy D. Boutwell 8/14/15<br>Engineer Of Record Signature and Date | Jared W. Perdue, PE<br>FDOT District Design Engineer — Date | Printed Name<br>FHWA Transportation Engineer — Date |

TRACY D. BOUTWELL LICENSED No. 57670 STATE OF FLORIDA PROFESSIONAL ENGINEER

# PROJECT IDENTIFICATION

FINANCIAL PROJECT ID 218605-4-22-01 FEDERAL AID PROJECT NO. N/A COUNTY NAME Escambia

SECTION NO. 48260000 ROAD DESIGNATION SR 8 (I-10) LIMITS/MILEPOST MP 5.359- MP 5.743

PROJECT DESCRIPTION Major Reevalutaion for SR 10 (US 90A, Nine Mile Road) from SR 10A (US 90, Mobile Highway) to SR 297 (Pine Forest Road)

# PROPOSED ROADWAY TYPICAL SECTION

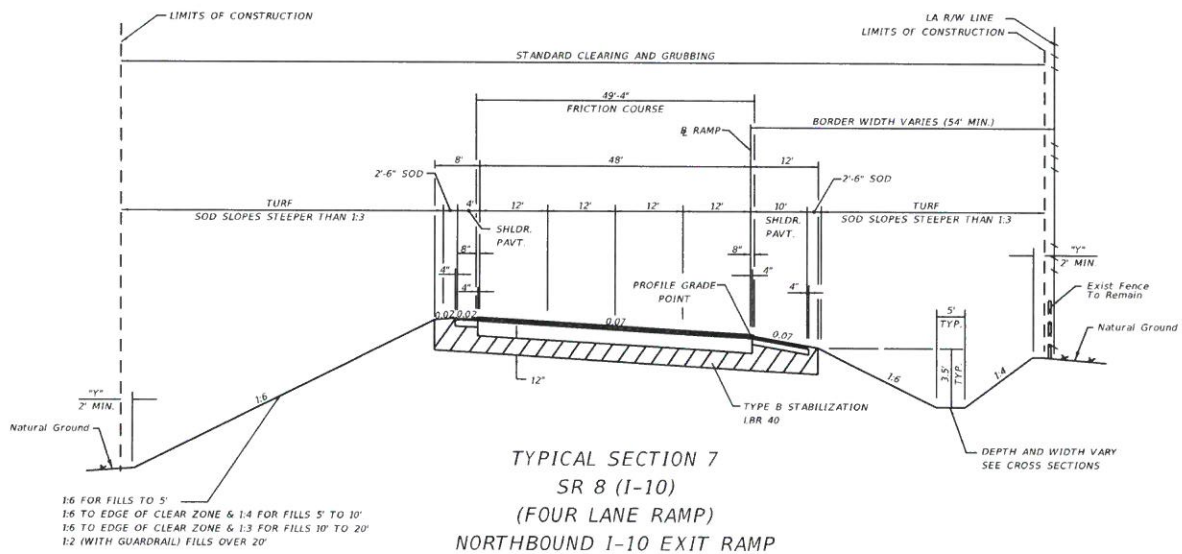


TYPICAL SECTION 7
SR 8 (I-10)
(FOUR LANE RAMP)
NORTHBOUND I-10 EXIT RAMP
DESIGN SPEED = 25-45 MPH
POSTED SPEED = N/A

| APPROVED BY: Tracy D. Boutwell, PE | FDOT CONCURRENCE | FHWA CONCURRENCE |
|---|---|---|
| Tracy D. Boutwell 8/14/15<br>Engineer Of Record Signature and Date | Jared W. Perdue, PE<br>FDOT District Design Engineer — Date | Printed Name<br>FHWA Transportation Engineer — Date |

TRACY D. BOUTWELL LICENSE No. 57670 STATE OF FLORIDA PROFESSIONAL ENGINEER

# PROJECT IDENTIFICATION

FINANCIAL PROJECT ID 218605-4-22-01 FEDERAL AID PROJECT NO. N/A COUNTY NAME Escambia

SECTION NO. 48010000 ROAD DESIGNATION SR 10 LIMITS/MILEPOST

PROJECT DESCRIPTION Major Reevalutaion for SR 10 (US 90A, Nine Mile Road) from SR 10A (US 90, Mobile Highway) to SR 297 (Pine Forest Road)

# PROPOSED ROADWAY TYPICAL SECTION

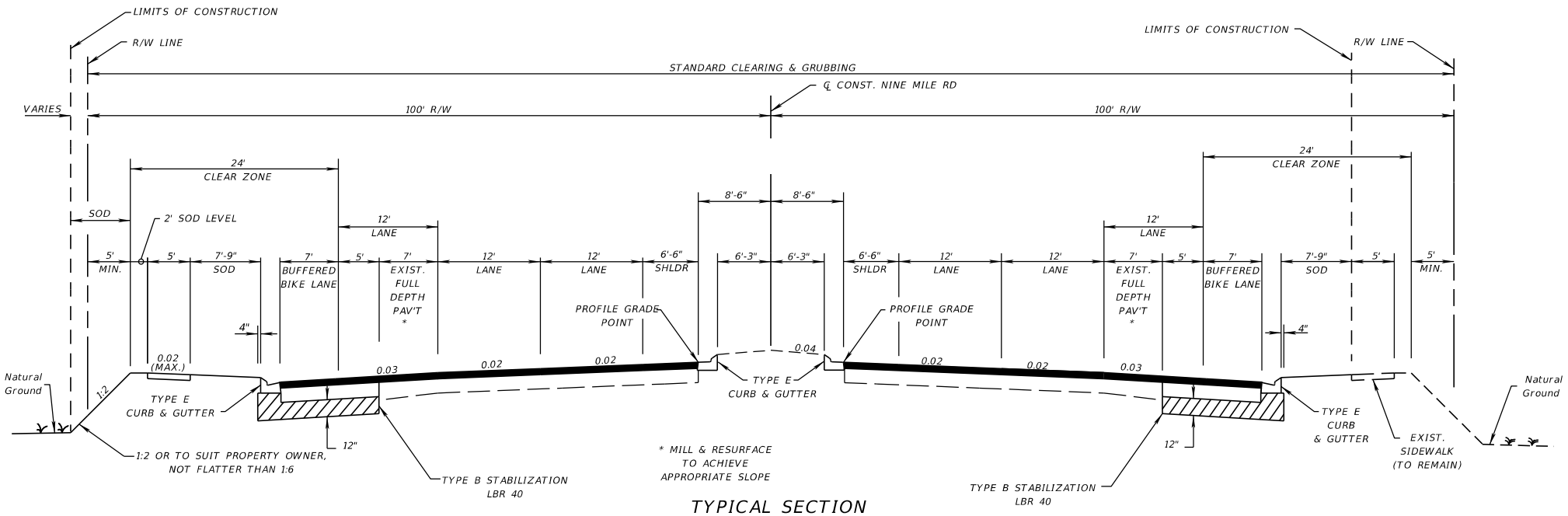


TYPICAL SECTION
SR 10 (US 90A)
SIX LANE BUILD-OUT

| APPROVED BY: Tracy D. Boutwell, PE | FDOT CONCURRENCE | FHWA CONCURRENCE |
|---|---|---|
| Engineer Of Record Signature and Date | Jared W. Perdue, PE<br>FDOT District Design Engineer — Date | Printed Name<br>FHWA Transportation Engineer — Date |

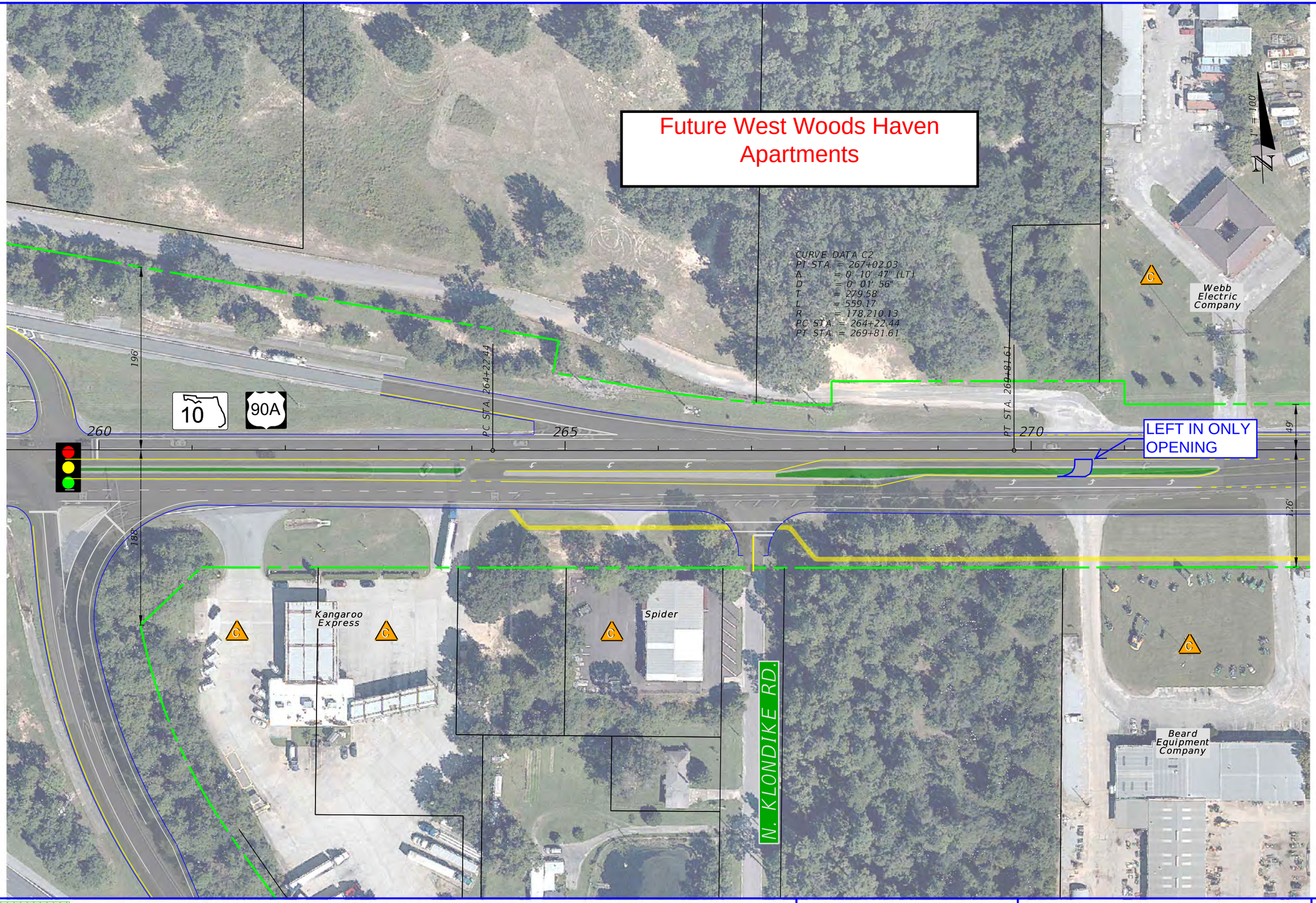


**LEGEND**

- WETLANDS
- FLOODPLAINS
- POTENTIALLY CONTAMINATED SITE
- EXISTING ROW
- PROPERTY LINES
- SIDEWALK/TRAIL
- PROPOSED BRIDGE
- PROPOSED ROADWAY
- POND ALTERNATIVES

0 20 100
Feet

DATE OF AERIAL: 2013

AMERICAN CONSULTING ENGINEERS OF FLORIDA, LLC
4489 Woodbine Rd.
Pace, Florida 32571
Phone: (850) 289-1000 Fax: (850) 289-1001
Certificate of Authorization No. 9302
Tracy D. Boutwell, P.E. No. 57670

**S.R. 10 PD&E STUDY**

**Mobile Hwy. (S.R.10A) to Pine Forest Rd. (S.R.297)**

**Draft Concept Plans**

SHEET NO.

19

*Florida Department of Transportation*
*District 3*

***FINAL***

# DESIGN-BUILD
# REQUEST FOR PROPOSAL
# for
# SR 10 (US 90A / Nine Mile Rd.) Multilane
# from CR 99 (Beulah Rd.) to SR 297 (Pine Forest Rd.)

## Section No. 48010000

## Escambia County

**Financial Projects Number(s): 218605-6-52-01 & 218605-7-52-01**
**Federal Aid Project Number(s): N/A**
**Contract Number: E3O54**

**Previous Draft Addendums Nos. 1, 2 & 3 are incorporated**

**Addendum No. 1 – 08/18/15**

# Table of Contents

**I. Introduction. ..... 1**
- **A. Design-Build Responsibility** ..... 7
- **B. Department Responsibility** ..... 8

**II. Schedule of Events. ..... 9**

**III. Threshold Requirements. ..... 10**
- **A. Qualifications** ..... 10
- **B. Joint Venture Firm** ..... 10
- **C. Price Proposal Guarantee** ..... 11
- **D. Pre-Proposal Meeting** ..... 11
- E. Technical Proposal Page-Turn Meeting ..... 11
- F. Question and Answer Session ..... 12
- **G. Protest Rights** ..... 12
- **H. Non-Responsive Proposals** ..... 13
- **I. Waiver of Irregularities** ..... 13
- J. Modification or Withdrawal of Technical Proposal ..... 14
- **K. Department's Responsibilities** ..... 14
- **L. Design-Build Contract** ..... 14

**IV. Disadvantaged Business Enterprise (DBE) Program. ..... 14**
- **A. DBE Availability Goal Percentage:** ..... 14
- **B. DBE Supportive Services Providers**: ..... 15
- **C. Bidders Opportunity List**: ..... 15

**V. Project Requirements and Provisions for Work. ..... 15**
- A. Governing Regulations: ..... 15
- **B. Innovative Aspects**: ..... 18
- C. Geotechnical Services: ..... 21
- D. Department Commitments: ..... 21
- E. Environmental Permits: ..... 21
- F. Railroad Coordination – N/A ..... 23
- G. Survey: ..... 23
- H. Verification of Existing Conditions: ..... 23
- I. Submittals: ..... 23
- J. Contract Duration: ..... 26
- K. Project Schedule: ..... 26
- L. Key Personnel/Staffing: ..... 28
- **M. Partner/Teaming Arrangement:** ..... 28
- N. Meetings and Progress Reporting: ..... 28

O. Public Involvement: 29
P. Quality Management Plan (QMP): 30
Q. Liaison Office: 31
R. Engineers Field Office: - N/A 31
**S. Schedule of Values:** 31
T. Computer Automation: 32
U. Construction Engineering and Inspection: 32
**V. Testing:** 32
W. Value Added: 32
X. Adjoining Construction Projects: 33
**Y. Issue Escalation**: 33

**VI. Design and Construction Criteria. 34**
A. General: 34
B. Vibration and Settlement Monitoring: 34
**C. Geotechnical Services:** 34
**D. Utility Coordination:** 37
**E. Roadway Plans:** 40
**F. Geometric Design:** 43
G. Design Documentation, Calculations, and Computations: 43
H. Structure Plans: 43
**I. Specifications:** 44
J. Shop Drawings: 45
**K. Sequence of Construction**: 45
**L. Stormwater Pollution Prevention Plans (SWPPP):** 45
**M. Temporary Traffic Control Plan:** 46
N. Environmental Services/Permits/Mitigation: 47
**O. Signing and Pavement Marking Plans:** 49
**P. Lighting Plans:** 49
**Q. Signalization Plans:** 50
**R. Landscape Opportunity Plans:** 51

**VII. Technical Proposal Requirements: 53**
A. General: 53
B. Submittal Requirements: 53
C. Evaluation Criteria: 55
D. Final Selection Formula: 57
E. Final Selection Process: 58
F. Stipend Awards: 58

**VIII. Bid Proposal Requirements. 58**
A. Bid Price Proposal: 58

## ATTACHMENTS

The Attachments listed below are hereby incorporated into and made a part of this Request for Proposal (RFP) as though fully set forth herein.

Project Advertisement
Division I Design-Build Specifications
Divisions II and III Special Provisions identified by the Department to be used on the Project:
- Mobilization (SP1010000DB)
- Contractor Quality Control General Requirements (SP1050813DB)
- Structures Foundations (SP4550000DB)

Value Added Developmental Specifications
- Value Added Bridge Component (DEV475)

Workforce and Bituminous Material document
NEPA documents
Right-of-way certification
Right-of-way Commitments/Agreements
**Revised** Pavement Design
**Revised** Typical Section Package
**Future Six Lane typical section**
**West Woods Haven Appt. Median Opening Sketch**

Bid Price Proposal Forms:
1. Design Build Proposal Of Proposer (No. 375-020-12)
2. Design-Build Bid Blank (No. 375-020-17)
3. Design-Build Bid or Proposal Bond (No. 375-020-34)
4. Vendor Certification Regarding Scrutinized Companies Lists (No. 375-030-60)
5. Design-Build Bid Proposal (No. 700-010-65)

Other Contract Forms:
1. Design-Build Contract Bond (No. 375-020-14)
2. Contract Affidavit (No. 375-020-30)
3. Design-Build Contract (No. 375-020-13)

## REFERENCE DOCUMENTS

The following documents are being provided with this RFP. Except as specifically set forth in the body of this RFP, these documents are being provided for reference and general information only. They are not being incorporated into and are not being made part of the RFP, the contract documents or any other document that is connected or related to this Project except as otherwise specifically stated herein. No information contained in these documents shall be construed as a representation of any field condition or any statement of facts upon which the Design-Build Firm can rely upon in performance of this contract. All information contained in these reference documents must be verified by a proper factual investigation. The bidder agrees that by accepting copies of the documents, any and all claims for damages, time or any other impacts based on the documents are expressly waived.

Straight line diagram
Location Map

Conceptual Plans
Right-of-way Maps
FDOT ITS Asbuilts
FPID 220876-8 Pushbutton Traffic Signal Plans – provided via ZIP file
Project information for conceptual plans – provided via ZIP file
Existing Bridge Information for Bridge Nos. 480061, 480066 and 480188 – provided via ZIP file
Adjacent SR 10 (US 90A / Nine Mile Rd) Multilane Project (218605-3) – provided via ZIP file

# I. Introduction.

The Florida Department of Transportation (Department) has issued this Request for Proposal (RFP) to solicit competitive bids and proposals from Proposers for the widening of SR 10 (US 90A / Nine Mile Rd.) from the existing two lane capacity to a four lane capacity roadway from CR 99 (Beulah Rd) (CMP 4.282) to SR 297 (Pine Forest Rd.) (CMP 8.299). The current four lane typical section in the vicinity of the SR 8 (I-10) interchange will be modified to lower the roadway to improve the deficient vertical clearance at the overpass bridges. The contract includes FPID 218605-6 which includes the limits from CR 99 (Beulah Rd.) (CMP 4.282) to SR 8 (I-10) (CMP 7.483) and FPID 218605-7 which includes the limits from SR 8 (I-10) (CMP 7.483) to SR 297 (Pine Forest Rd.) (CMP 8.299). The total Project length is approximately 4.017 miles. The Project is located in Escambia County.

Right-of-way acquisition is currently ongoing to acquire pond right-of-way as depicted in the conceptual plans and latest right-of-way maps. The anticipated right-of-way clear date for the Project is **May 16, 2016.** This right of-way clear date has been utilized to determine the maximum contract duration established in this RFP by the Department. The Design-Build Firm shall utilize these dates in determining their schedule for the Project that will be submitted in accordance with the Design-Build Division I Specifications.

Due to ongoing right-of-way acquisition, separate Notice to Proceeds will be issued on the contract. The first Notice to Proceed after contract execution will be for the design phase to begin. A separate Notice to Proceed will be issued for construction. A Notice to Proceed for construction will be issued once all right-of-way is clear, design plans and specifications have been released for construction, NEPA for construction is clear, all permits are obtained, and utilities are certified. The Department will be responsible for right-of-way and NEPA clearances and the Design-Build Firm will be responsible for plans, specifications, permits, and utility certification. The Design-Build Firm will be allowed to request to be released for construction to clear and grub in advance of the official Notice to Proceed for construction. These clearing and grubbing activities should be in upland areas that do not require a permit for clearing activities or a permit must be approved if clearing and grubbing in wetlands is pursued. The Design-Build Firm shall provide sufficient advance notification to allow the Department sufficient time to obtain NEPA clearances as necessary. The Design-Build Firm will also be allowed to request to be released for construction for various components of construction (i.e. utility relocations, pond excavations, specific lengths of roadway construction, etc.) to help expedite their schedule. This may include issuing an early NTP and then releasing certain plan components for construction. The Department will ONLY consider this request if appropriate permits have been obtained and the Department has cleared these activities based on right-of-way and NEPA constraints.

The conceptual plans included in the Reference Documents of this RFP were developed at the time of the recent PD&E Reevaluation. The limits depicted in the conceptual plans do NOT match the limits of this contract. Be mindful that the section of conceptual plans shown from SR 10A (US 90 / Mobile Hwy.) to just west of CR 99 (Beulah Rd.) are not included in this design build project. The conceptual plans are preliminary in nature. The approved typical section included in the Attachments of this RFP is a binding requirement of this contract. Preliminary utility coordination has occurred and resulting information is being provided. A separate set of conceptual plans is included in the Reference Documents section depicting the utility location information obtained during the preliminary coordination.

The Design-Build Firm shall include a Landscape Architect duly authorized to practice Landscape Architecture in the State of Florida consistent with State Statute 481 part II. The Design-Build Firm's Landscape Architect (DBLA) shall review and identify future unencumbered landscape areas for this Project. This Project shall reserve landscape opportunities and implement the FDOT Highway Beautification Policy. Landscape construction will be performed by others and not included with this Project. Areas shall be identified in the Design-Build Firm's Proposal Plans as "future landscape areas to

be constructed by others". Coordination will be required by the Design-Build Firm and the District Landscape Architect. Coordination between the Design-Build Firm's Landscape Architect, the District Landscape Architect and Engineer will be required during the Design-Build plans development process to ensure landscape opportunities are accommodated within the project limits. The DBLA shall be included in the project kick-off meeting and subsequent progress meetings.

**Description of Work**

The Design-Build Firm will be required to design and construct the project including all work necessary to convert the existing two lane facility to a fully functional four lane divided facility with two eastbound lanes and two westbound lanes. Design and construction of storm water facilities will be required to obtain necessary permits. All work shall be contained within the Department's right-of-way. No work may be performed outside of the Department's existing right-of-way until the planned right-of-way acquisitions are complete (and then only within the existing right-of-way).

The conceptual plans (and associated files) are being provided for information only. The Typical Section Packages included in this RFP as an Attachment is the minimum requirement for the project. The preliminary median opening locations and sizes (including auxiliary lanes) as depicted in the conceptual plans are required to be installed. Minor access management modifications will be allowed to satisfy the Department's Governing Criteria, but any significant modifications will require approval of the District Design Engineer. The reconstruction and/or resurfacing limits for connecting side roads will be required to, at a minimum, match the limits in the conceptual plans. The Design-Build Firm will be required to provide proper access (i.e. driveways) to SR 10 (US 90A/ Nine Mile Rd.) to ensure the safety and efficiency of the transportation system is maintained. This includes but is not limited to providing reconstructed driveways at all locations where driveways currently exist. Traffic signal modification/installation/removal, including mast arm construction is a requirement of this contract. The Design-Build Firm shall design and construct sidewalk for the full limits depicted in the conceptual plans. The pavement design attached to this RFP shall be the minimum pavement design requirements. The Design- Build Firm will be required to comply with all right-of-way commitments attached to this RFP.

**The approved Typical Section Package for this project includes improvements beyond standard design criteria based on the approved results of the Value Engineering Study performed during the NEPA Reevaluation. The improved components include widening the inside shoulder from 4' to 6.5' section and installing full depth base and pavement on the shoulders. Both elements are included to better accommodate the future six-lane typical section.**

**A left-in only eastbound median opening for a future development (West Woods Haven Apartments) shall be installed as indicated in Addendum No. 1. The Design-Build Firm will be responsible for all design and construction for this additional median opening.**

Noise wall construction is a requirement of this contract as per the Noise Study Report findings at Nature Trail. The Design-Build Firm will be required to install a noise wall from Sta. 179+00 to Sta. 188+60 and from Sta. 195+00 to Sta. 210+00. The offset of the wall from the roadway may vary, but should be as close to the right-of-way as feasible. The Design-Build shall make every effort to avoid impacting the recently relocated overhead electric lines. For this reason the Design-Build Firm may locate the wall within an 8' offset from the right-of-way line which would require a 10' wall height or at a 17' offset from the right-of-way line at an 8' wall height. Variations in these offsets and heights are allowed with Department approval. In order to eliminate constructability and maintenance concerns adjacent to the overhead electric line, the Design-Build Firm shall evaluate utilizing shorter wall panel heights or front panel installation in lieu of drop-in panels. The maintenance concerns are primarily for utility company to be able to access their line

in the future. The Department will prepare the Final Noise Study Report which will require the Design-Firm's elevations for roadway profile and finish grade at the proposed wall location to reanalyze the noise wall effectiveness. The Design-Build Firm will be required to adjust the wall height and/or offset if necessary until noise wall effectiveness is achieved. The Department will be responsible for any public involvement required for the noise wall; however, the Design-Build Firm will be required to provide any necessary information to facilitate the public information coordination.

The seasonal high water table elevations provided in this RFP shall be utilized as the base clearance water elevation. The Design-Build Firm shall ensure proper separation between base course and the base clearance water elevation as required by Department criteria for both the existing and proposed roadway. Base clearance shall be provided to ensure a future six lane roadway section has sufficient base clearance. The Department will only consider proposals for modification of the seasonal high water elevations if sufficient documentation is provided and the District Design Engineer approves.

The typical section for SR 10 (US 90A / Nine Mile Rd.) shall be a rural typical section from west of CR 99 (Beulah Rd.) and transition to a suburban typical section east of Beulah Rd. to east of SR 297 (Pine Forest Rd.). The typical section for the entire Project shall include two eastbound travel lanes and two westbound travel lanes with a minimum 12' lane width and 7' buffered bike lane. Where allowable, offset left turn lanes should be provided. A parallel structure shall be provided at Eleven Mile Creek south of the existing bridge.

SR 10 (US 90A / Nine Mile Rd.) at SR 8 (I-10) does not meet minimum vertical clearance requirements at the overpass bridges. The Design-Build Firm shall lower SR 10 (US 90A / Nine Mile Rd.) as much as possible to increase the vertical clearance under SR 8 (I-10) (refer to Vertical Clearance Memorandum dated May 13, 2014). It is anticipated that one foot additional clearance can be attained therefore lowering the roadway by one foot shall be the minimum requirement. The minimum base clearance requirement shall apply in this area, but it does not have to be provided for a future six lane section. The Design-Build Firm shall provide a proper drainage design in this area to ensure ponding does not occur as the sag profile is designed and constructed.

The SR 8 (I-10) ramps will be required to be reconstructed for the vertical profile change and also to provide additional lanes per the concept plans and Design Traffic Technical Memorandum. The ramps shall not be widened past the gore. The SR 8 (I-10) ramp improvements depicted in the conceptual plans are the minimum limits requirements and number of lanes required to be provided by the Design-Build Firm. No deviation past the gore point will be allowed since it would require a new NEPA document for SR 8 (I-10).

The begin project limits will extend approximately 1700' west of CR 99 (Beulah Rd.) to allow for the intersection to be built out to four lanes, including turn lanes, and transition back to two lanes west of the intersection. The reduced speed limit of 45 mph should extend to approximately 1,000 feet west of CR 99 (Beulah Rd.). The end project limits will tie to the adjacent multilane project (FPID 218605-3) that begins just west of SR 297 (Pine Forest Rd.). The Design-Build Firm shall coordinate with the Department and/or designer and contractor for FPID 218605-3 as the project progresses to monitor and adjust design and construction limits and methods as needed.

All work associated with the previously listed elements shall be included in the Project. This additional work will include removing existing materials as necessary, clearing and grubbing, performance turf, performance turf-sod (as appropriate), earthwork, erosion control, drainage components removal or construction (including any extensions necessary), design/removal/installation of roadside signs within the Project limits, thermoplastic pavement markings, raised (retro-reflective) pavement markings, profiled

thermoplastic pavement markings, mailboxes and any additional items needed to widen SR 10 (US 90A / Nine Mile Rd.) to a four lane facility.

Approved design variations for guardrail offset, border width, vertical clearance and median width less than 30 feet have been approved and may be utilized by the Design-Build Firm. These variations may ONLY be used within the limits approved in the design variations. Any proposed design exceptions and/or variations should be requested during the procurement process through the alternative technical concept (ATC) process.

The Design-Build Firm will be required to comply with new Department criteria that discourages the use of fencing around stormwater ponds. If permitting requirements dictate usage of fencing around a stormwater pond, the Design-Build Firm will be responsible for obtaining the appropriate Design Variations and including the fencing in their design. For any proposed fencing location, the Design-Build Firm shall provide black vinyl coated fencing (Type B), a 24' wide sliding gate (black vinyl coated) be provided and at a minimum one gate access at the driveway or access location be installed. All fence components and hardware shall match in color.

The Design-Build Firm will be responsible for providing utility adjustment plans and coordinating utility relocations. Survey was performed December 2013 and will be the Design-Build Firm's responsibility to verify utility locations.

The Design-Build Firm shall provide a fully functional drainage system to accommodate the requirements of this project. This includes, but is not limited to, replacement or modification of existing structures as needed, and any other drainage modifications necessary to provide a fully functional four lane facility along SR 10 (US 90A / Nine Mile Rd.) and SR 8 (I-10) ramp widening to meet water quality and quantity permitting requirements. The Design-Build Firm will be responsible for obtaining all permits. The Design-Build Firm shall NOT include littoral zones and plantings in stormwater pond designs. Any proposed storm water pond modifications must remain within the proposed or existing right-of-way defined by the Department. The storm water ponds shall be designed for the future six lane facility.

The existing high mast lighting at the SR 8 (I-10) interchange may require modifications. If modifications are required, the Design-Build Firm shall relocate/modify the existing high mast lighting to ensure illumination coverage of the interchange is provided.

The Department has an existing ITS system within the project limits that is operated and maintained byTranscore ITS, LLC. This system is NOT included in the Sunshine One-Call system. Existing as-built plans are being provided in this RFP as a Reference Document. The Design-Build Firm shall avoid impacts to the existing ITS system to the greatest extent possible. Transcore will be responsible for any necessary relocations resulting from anticipated impacts to the ITS system. The Design-Build Firm will be responsible for all coordination during design and construction to determine where impacts to the existing ITS system occur and coordinating the necessary ITS relocations with Transcore. The Design-Build Firm shall also include adequate time in the project schedule to accommodate all necessary relocations/modifications/protection to be performed by Transcore. Contact information for Transcore is Jeff Messer, 580 East Burgess Rd., Suite B-1, Pensacola, FL 32504, Jeff.messer@transcore.com, (404) 952-3943.

The Design-Build Firm shall design and construct new traffic signals along SR 10 (US 90A / Nine Mile Rd.) at the SR 8 (I-10) interchange. The existing signalized intersections at CR 99 (Beulah Rd.), Heritage Oaks Blvd./Salt Grass Dr., and Navy Federal Way will require replacing existing traffic signals to accommodate the new four lane section. Pedestrian features shall be installed at all signalized intersections.

New roadside signage will be required along SR 10 (Nine Mile Rd.) and all side roads in accordance with Department requirements and Manual for Uniform Traffic Control Devices (MUTCD) requirements.

Performance turf-sod is required for any slopes steeper than 1:3.

Vibration monitoring will required for the residential structures along West Salt Grass Dr. which is along the south side of SR 10 (US 90A / Nine Mile Rd) (Stations 179+00 to 212+00).

It is the intent to always preserve existing vegetation including trees and palms that do not conflict with proposed improvements. Tree and palm protection shall comply with FDOT Standard Index 544. Within the Project limits and within the Project Right-of-Way, it will be the responsibility of the Design-Build Firm to identify and remove all Category 1 invasive exotics as defined by the Florida Exotic Pest Plant Council (www.fleppc.org) and as identified in the Landscape Opportunity Plan.

The intent of this Project is to replace, repair or rehabilitate all deficiencies within the Project limits such that maintenance work required upon Final Acceptance is limited to routine work.

Ongoing Right-of Way Acquisition Process

The Department's Right-of-Way Office is acquiring the necessary property right-of-way for the stormwater ponds either by negotiated settlement or by the exercise of eminent domain (condemnation). The right-of-way requirements for the Project are based on the maps as developed from the requirements of the conceptual plans attached to this RFP.

In addition to the right-of-way maps provided as a Reference Document in this RFP, the Department right-of-way maps for SR 10 (US 90A / Nine Mile Rd.) can be found on the internet at: http://www.dot.state.fl.us/surveyingandmapping/rowmap.shtm. These right-of-way maps are for informational purposes only. Design-Build Firm's verification with the public records is advised to confirm the accuracy of the maps.

Construction activities cannot occur on acquired property until it has been certified as "clear" by the Department's Right-of-Way Office and the Notice to Proceed for construction has been issued.

During the right-of-way acquisition process there are often instances where design commitments are made based on agreements with owners during settlement negotiations or as part of final negotiated settlements. Such agreements are required to enable successful negotiations with property owners. Often times, these agreements are of benefit to both the property owner and the Department. These agreements include, but are not limited to profile grade, driveway connections, culverts, ditch profiles, median openings, etc. The design commitments previously made in settlement must be incorporated in the design and construction of the Project to not only function as a safe and efficient roadway, but for it to also consider the desires and needs of adjoining property owners. Existing Right-of-way Commitments for these specific items are included as attachments to this RFP.

There will likely be additional agreements with property owners made during remaining right-of-way acquisition negotiations. As the right-of-way process progresses there will be other such commitments that will be forthcoming. Any further right-of-way commitments made by the Department and subsequently issues to the awarded Design-Build Firm after contract execution shall be incorporated into the plans and design documents for the Project and be constructed as part of the Project. After Contract execution, if additional installations/modifications are required beyond the totals listed in this paragraph, the Department

will negotiate with the Design-Build Firm on an appropriate supplemental agreement for the required work or in the Department's discretion pay for such work pursuant to Subarticle 4-3.2, Division I, Design-Build Specifications for this contract.

As the negotiation phase of any right-of-way parcel acquisition comes to a close there will likely be a need for one or more parcels that have not been acquired by negotiation to be condemned. Any such condemnation action will be initiated by the Department and will immediately require assistance and court testimony from the Engineer of Record for the Design-Build Firm regarding both public purpose and the reasonable necessity of specific parcels for the project. The Design-Build Firm will be required to provide any and all documentation immediately as may be requested by the Department to aid in the Right-of-Way acquisition process. The Design-Build Firm's Engineer of Record is required to be available as needed by the Department to assist in the Right-of-Way acquisition process. If the Design- Build Firm's Engineer of Record is required to act as an expert witness (i.e. for deposition or court testimony) the Department will enter into a separate contract with the Design-Build Firm's Engineer of Record for this effort.

After right-of-way acquisitions are complete, the Department will have its demolition contractor (under a separate contract) remove all building, septic tanks, and wells during its clearing activities. The Design-Build Firm will be responsible for any remaining clearing and grubbing including but not limited to existing fencing, trees, concrete removal, etc.

All design and construction activities for the project will be required to remain within the existing right-of-way. The Department Right-of-Way Maps are available on the internet. These maps are the controlling document in reference to right-of-way line location. The conceptual plans may or may not accurately depict the right-of-way being acquired by the Department.

During the right-of-way acquisition negotiation process, the Department may obtain rights-of-entry or easements from property owners and document this specific access right in the Right-of-Way Commitments. For this reason, the Right-of-Way Commitments that include property access rights shall overrule the Right-of-Way Maps and the conceptual plans.

Right-of-way acquisition process for unique proposals by Design-Build Firms

It is the Department's intent that all Project construction activities be conducted within the existing Right-of-Way. The Design-Build Firm may submit a Technical Proposal that requires the acquisition of additional Right-of-Way if the subject acquisition was approved during the Alternative Technical Concept (ATC) process. Any Technical Proposal that requires the acquisition of additional Right-of-Way will not extend the contract duration as set forth in the Request for Proposal under any circumstances. The Department will have sole authority to determine whether the acquisition of additional Right-of-Way on the Project is in the Department's best interest, and the Department reserves the right to reject the acquisition of additional Right-of-Way.

If a Design-Build Firm intends to submit a Technical Proposal that requires the acquisition of additional Right-of-Way, the Design-Build Firm shall discuss such a proposal with the Department as part of the ATC process. If a Design-Build Firm submits a Technical Proposal that requires the acquisition of additional Right-of-Way and the Design-Build Firm fails to obtain Department approval as part of the ATC process, then the Department will not consider such aspects of the Proposal during the Evaluation process. If the Design-Build Firm's Technical Proposal requires additional Right-of-Way approved by the ATC process, the additional Right-of-Way will be required to be directly acquired by the Department. The Design-Build Firm shall submit, along with the Technical Proposal, Right-of-Way maps and legal descriptions including area in square feet of any proposed additional Right-of-Way parcels in the Technical Proposal. The

additional Right-of-Way will be acquired by the Department in accordance with all applicable state and federal laws, specifically including but not limited to the Uniform Relocation Assistance and Real Property Acquisition Policies for Federal and Federally Assisted Programs (42 USC Chapter 61) and its implementing regulations. This includes completing a SEIR/NEPA evaluation as appropriate. All costs concerning the acquisition of additional Right-of-Way will be borne solely by the Design-Build Firm. These costs include, but are not limited to consultant acquisition, appraisal services, court fees, attorney and any expert fees, property cost, etc. The Department will have sole discretion with respect to the entire acquisition process of the additional Right-of-Way.

If the Design-Build Firm's Technical Proposal requires additional Right-of-Way, the acquisition of any such Right-of-Way shall be at no cost to the Department, and all costs associated with securing and making ready for use such Right-of-Way for the Project shall be borne solely by the Design-Build Firm as a part of the Design-Build Firm's Lump Sum Price Bid. The Department will not advance any funds for any such Right-of-Way acquisition and the Design-Build Firm shall bear all risk of delays in the acquisition of the additional property, regardless of cause or source.

The Department will provide to the successful Design-Build Firm an estimate of all costs related to the acquisition and use of the additional Right-of-Way for the project. At the time the Design-Build Firm returns the executed contract to the Department, the Design-Build Firm will provide the Department funds equal to the amount of the Department's estimate along with a Letter of Credit approved by the Department in an amount equal to 100% of the Department's estimate. If additional funds beyond the Department's estimate are anticipated, the Design-Build Firm shall be solely responsible for all such costs and provide the same to the Department upon ten (10) days written notice from the Department. The Letter of Credit is for the purpose of securing the obligations of the Design-Build Firm with respect to the acquisition and use of additional Right-of-Way. The Letter of Credit will be released upon the Department's determination that all costs related to the acquisition of and making ready for use of the additional Right-of-Way have been satisfied. Any remaining funds provided will be returned to the Design-Build Firm.

Any additional Right-of-Way must be acquired prior to the commencement of any construction on or affecting the subject property. The Design-Build Firm waives any and all rights or claims for information, compensation, or reimbursement of expenses with respect to the Design-Build Firm's payment to the Department for costs associated with the acquisition of the additional Right-of-Way. The additional Right-of-Way cannot be used for any construction activity or other purpose until the Department has issued an applicable parcel clear letter or a Right-of-Way Certification for Construction.

If the Department's attempt to acquire the additional Right-of-Way is unsuccessful, then the Design-Build Firm shall provide a design of the Project within existing Right-of-Way and be required to complete the Project solely for the Lump Sum Price Bid, with no further monetary or time adjustments arising therefrom. Under no circumstances will the Department be liable for any increase in either time or money impacts the Design-Build Firm suffers due to the Design-Build Firm's proposed acquisition of additional Right-of-Way, whether or not the acquisition is successful.

### A. Design-Build Responsibility

The Design-Build Firm shall be responsible for survey, geotechnical investigation, design, preparation of all documentation related to the acquisition of all permits not acquired by the Department, preparation of any and all information required to modify permits acquired by the Department if necessary, maintenance of traffic, demolition, and construction on or before the Project completion date indicated in the Proposal. The Design-Build Firm shall coordinate all utility relocations.

The Design-Build Firm shall be responsible for compliance with Design and Construction Criteria (Section VI) which sets forth requirements regarding survey, design, construction, and maintenance of traffic during construction, requirements relative to Project management, scheduling, and coordination with other agencies and entities such as state and local government, utilities and the public.

The Design-Build Firm shall be responsible for reviewing the approved Environmental Document of the PD&E Study and all subsequent environmental document reevaluations.

The Design-Build Firm is responsible for coordinating with the District Environmental Management Office (DEMO) on any engineering information related to Environmental Reevaluations. The Design-Build Firm will not be compensated for any additional costs or time associated with Reevaluation(s) resulting from proposed design changes.

The Design-Build Firm may propose changes which differ from the approved Interchange Proposal Report (if applicable) and/or the Project Development & Environment (PD&E) Study. Proposed changes must be coordinated through the Department. If changes are proposed to the configuration, the Design-Build Firm shall be responsible for preparing the necessary analyses and documentation required to satisfy requirements to obtain approval of the Department and , if applicable, FHWA. The Design-Build Firm shall provide the required documentation for review and processing. Approved revisions to the configuration may also be required to be included in the Reevaluation of the National Environmental Policy Act (NEPA) document or State Environmental Impact Report (SEIR) Reevaluations, per Section N (Environmental Services/Permits/Mitigation) of the RFP. The Design-Build Firm will not be compensated for any additional costs or time resulting from proposed changes.

The Design-Build Firm shall examine the Contract Documents and the site of the proposed work carefully before submitting a Proposal for the work contemplated and shall investigate the conditions to be encountered, as to the character, quality, and quantities of work to be performed and materials to be furnished and as to the requirements of all Contract Documents. Written notification of differing site conditions discovered during the design or construction phase of the Project will be given to the Department's Project Manager.

The Design-Build Firm shall examine boring data, where available, and make their own interpretation of the subsoil investigations and other preliminary data, and shall base their bid on their own opinion of the conditions likely to be encountered. The submission of a proposal is prima facie evidence that the Design-Build Firm has made an examination as described in this provision.

The Design-Build Firm shall demonstrate good Project management practices while working on this Project. These include communication with the Department and others as necessary, management of time and resources, and documentation.

The Design-Build Firm will provide Litter Removal and Mowing in accordance with Specification Section 107 with a 30 calendar day mowing frequency and a 30 calendar day litter removal.

### B. Department Responsibility

The Department will provide contract administration, management services, construction engineering inspection services, environmental oversight, and quality acceptance reviews of all work associated with the development and preparation of the contract plans, permits, and construction of the improvements. The Department will provide Project specific information and/or functions as outlined in this document.

In accordance with 23 CFR 636.109 of the FHWA, in a Federal Aid project, the Department shall have oversight, review, and approval authority of the permitting process.

The Department will determine the environmental impacts and coordinate with the appropriate agencies during the preparation of NEPA or SEIR Reevaluations. For Federal Aid projects, the Department will coordinate and process Reevaluations with FHWA.

## II. Schedule of Events.

Below is the current schedule of the events that will take place in the procurement process. The Department reserves the right to make changes or alterations to the schedule as the Department determines is in the best interests of the public. Proposers will be notified sufficiently in advance of any changes or alterations in the schedule. Unless otherwise notified in writing by the Department, the dates indicated below for submission of items or for other actions on the part of a Proposer shall constitute absolute deadlines for those activities and failure to fully comply by the time stated shall cause a Proposer to be disqualified.

| Date | Event |
|---|---|
| 05/18/15 | Advertisement |
| 06/08/15 | Letters of Interest for Phase I of the procurement process due in District Office by 4:00 pm local time |
| 06/26/15 | Proposal Evaluators submit Letter of Interest Scores to Contracting Unit 8:00 am local time |
| 07/01/15 | Contracting Unit provides Letter of Interest scores and Proposal Evaluators comments to Selection Committee 12:00 pm local time |
| 07/20/15 | Public Meeting of Selection Committee to review and confirm Letter of Interest scores 8:30 am local time |
| 07/20/15 | Notification to Responsive Design-Build Firms of the Letter of Interest scores 10:00 am local time |
| 07/22/15 | Deadline for all responsive Design-Build Firms to affirmatively declare intent to continue to Phase II of the procurement process 10:00 am local time |
| 07/22/15 | Shortlist Posting 12:00 pm local time |
| 07/27/15 | Final RFP provided to Design-Build Firms providing Affirmative Declaration of Intent to continue to Phase II of the procurement process |
| 08/06/15 | Mandatory Pre-proposal meeting at 1:30 pm local time at FDOT, 1074 Highway 90, Chipley, FL. All Utility Agency/Owners that the Department contemplates an adjustment, protection, or relocation is possible are to be invited to the mandatory Pre-Proposal meeting. |
| 08/13/15 | Deadline for Design-Build Firm to request participation in One-on-One Alternative Technical Concept Discussion Meeting No. 1 |
| 08/18/15 | Deadline for Design-Build Firm to submit preliminary list of Alternative Technical Concepts prior to One-on-One Alternative Technical Concept Discussion Meeting No. 1 |
| 08/20/15 | One-on-One Alternative Technical Concept Discussion Meeting No. 1. 90 Minutes will be allotted for this Meeting. |
| 08/27/15 | Deadline for Design-Build Firm to request participation in One-on-One Alternative Technical Concept Discussion Meeting No. 2 |
| 08/31/15 | Deadline for Design-Build Firm to submit preliminary list of One-on-One Alternative Technical Concepts prior to Alternative Technical Concept Discussion Meeting No. 2 |

| | |
|---|---|
| 09/03/15 | One-on-One Alternative Technical Concept Discussion Meeting No. 2. 90 Minutes will be allotted for this Meeting. |
| 09/17/15 | Deadline for submittal of Alternative Technical Concept Proposals 4:00pm local time. |
| 09/17/15 | Final deadline for submission of requests for Design Exceptions or Design Variations 4:00 pm local time. |
| 10/15/15 | Deadline for submittal of questions, for which a response is assured, prior to the submission of the Technical Proposal. All questions shall be submitted to the Pre-Bid Q&A website. |
| 10/20/15 | Deadline for the Department to post responses to the Pre-Bid Q&A website for questions submitted by the Design-Build Firms prior to the submittal of the Technical Proposal. |
| 10/27/15 | Technical Proposals due in District Office by 10:00 am local time |
| 10/27/15 | Deadline for Design-Build Firm for to "opt out" of Technical Proposal Page Turn meeting. |
| 11/05/15 | Technical Proposal Page Turn Meeting. Times will be assigned during the Pre-Proposal Meeting. 30 Minutes will be allotted for this Meeting. |
| 11/18/15 | Question and Answer Session. Times will be assigned during the pre-proposal meeting. One hour will be allotted for questions and responses. |
| 11/25/15 | Deadline for submittal of Written Clarification letter following Question and Answer Session 4:00 pm local time |
| 12/04/15 | Deadline for submittal of questions, for which a response is assured, prior to the submission of the Price Proposal. All questions shall be submitted to the Pre-Bid Q&A website. |
| 12/09/15 | Deadline for the Department to post responses to the Pre-Bid Q&A website for questions submitted by the Design-Build Firms prior to the submittal of the Price Proposal. |
| 12/18/15 | Price Proposals due in District Office by 10:00 am local time. |
| 12/18/15 | Public announcing of Technical Scores and opening of Price Proposals at 10:30 am local time at FDOT, 1074 Highway 90, Chipley, FL. |
| 12/28/15 | Public Meeting of Selection Committee to determine intended Award |
| 12/29/15 | Posting of the Department's intended decision to Award |
| 01/05/16 | Anticipated Award Date |
| 01/27/16 | Anticipated Execution Date |

## III. Threshold Requirements.

### A. Qualifications

Proposers are required to be pre-qualified in all work types required for the Project. The technical qualification requirements of Florida Administrative Code (F.A.C.) Chapter 14-75 and all qualification requirements of F.A.C. Chapter 14-22, based on the applicable category of the Project, must be satisfied.

### B. Joint Venture Firm

Two or more Firms submitting as a Joint Venture must meet the Joint Venture requirements of Section 14-22.007, F.A.C. Parties to a Joint Venture must submit a Declaration of Joint Venture and Power of Attorney Form No. 375-020-18, prior to the deadline for receipt of Letters of Interest.

If the Proposer is a Joint Venture, the individual empowered by a properly executed Declaration of Joint Venture and Power of Attorney Form shall execute the proposal. The proposal shall clearly identify who will be responsible for the engineering, quality control, and geotechnical and construction portions of the Work.

### C. Price Proposal Guarantee

A Price Proposal guaranty in an amount of not less than five percent (5%) of the total bid amount shall accompany each Proposer's Price Proposal. The Price Proposal guaranty may, at the discretion of the Proposer, be in the form of a cashier's check, bank money order, bank draft of any national or state bank, certified check, or surety bond, payable to the Department. The surety on any bid bond shall be a company recognized to execute bid bonds for contracts of the State of Florida. The Price Proposal guaranty shall stand for the Proposer's obligation to timely and properly execute the contract and supply all other submittals due therewith. The amount of the Price Proposal guaranty shall be a liquidated sum, which shall be due in full in the event of default, regardless of the actual damages suffered. The Price Proposal guaranty of all Proposers' shall be released pursuant to 3-4 of the Division I Design-Build Specifications.

### D. Pre-Proposal Meeting

Attendance at the pre-proposal meeting is mandatory. Any affirmatively declared proposer failing to attend will be deemed non-responsive and automatically disqualified from further consideration. The purpose of this meeting is to provide a forum for the Department to discuss with all concerned parties the proposed Project, the design and construction criteria, Critical Path Method (CPM) schedule, method of compensation, instructions for submitting proposals, Design Exceptions, Design Variations, and other relevant issues. In the event that any discussions at the pre-proposal meeting require, in the Department's opinion, official additions, deletions, or clarifications of the Request for Proposal, the Design and Construction Criteria, or any other document, the Department will issue a written addendum to this Request for Proposals as the Department determines is appropriate. No oral representations or discussions, which take place at the pre-proposal meeting, will be binding on the Department. FHWA will be invited on oversight Projects, in order to discuss the Project in detail and to clarify any concerns. Proposers shall direct all questions to the Departments Question and Answer website:
https://www3b.dot.state.fl.us/BidQuestionsAndAnswers/Proposal.aspx/SearchProposal

Failure by a Proposer to attend or be represented at the pre-proposal meeting will constitute a non-responsive determination of their bid package. Bids found to be non-responsive will not be considered. All Proposers must be present and signed in prior to the start of the mandatory pre-proposal meeting. The convener of the meeting will circulate the attendee sign in sheet at the time the meeting was advertised to begin. Once all Proposers have signed, the sign in sheet will be taken and the meeting will "officially" begin. Any Proposer not signed in at the "official" start of the meeting will be considered late and will not be allowed to propose on the Project.

### E. Technical Proposal Page-Turn Meeting

The Department will meet with each Proposer, formally for thirty (30) minutes, for a page-turn meeting. FHWA will be invited on Federal Aid Oversight Projects. The purpose of the page-turn meeting is for the Design-Build Firm to guide the Technical Review Committee through the Technical Proposal, highlighting sections within the Technical Proposal that the Design-Build Firm wishes to emphasize. The page-turn meeting will occur between the date the Technical Proposal is due and the Question and Answer session occurs, per the Schedule of Events section of this RFP. The Department will terminate the page-turn meeting promptly at the end of the allotted time. The Department will record all or part of the page-

turn meeting. All recordings will become part of the Contract Documents. The page-turn meeting will not constitute discussions or negotiations. The Design-Build Firm will not be permitted to ask questions of the Technical Review Committee during the page-turn meeting. An unmodified aerial or map of the project limits provided by the Design-Build Firm is acceptable for reference during the page-turn meeting. The unmodified aerial or map may not be left with the Department upon conclusion of the page turn meeting. Use of other visual aids, electronic presentations, handouts, etc., during the page turn meeting is expressly prohibited. Upon conclusion of the thirty (30) minutes, the Technical Review Committee is allowed five (5) minutes to ask questions pertaining to information highlighted by Design-Build Firm. Participation in the page-turn meeting by the Design-Build Firm shall be limited to eight (8) representatives from the Design-Build Firm. Design-Build Firms desiring to opt out of the page-turn meeting may do so by submitting a request to the Department.

### F. Question and Answer Session

The Department may meet with each Proposer, formally, for a Question and Answer (Q&A) session**.** FHWA shall be invited on Federal Aid Oversight Projects. The purpose of the Q & A session is for the Department to seek clarification and ask questions, as it relates to the Technical Proposal, of the Proposer. The Department may terminate the Q & A session promptly at the end of the allotted time. The Department shall record all or part of the Q & A session. All recordings will become part of the Contract Documents. The Q & A session will not constitute "discussions" or negotiations. Proposers will not be permitted to ask questions of the Department except to ask the meaning of a clarification question posed by the Department. No supplemental materials, handouts, etc. will be allowed to be presented in the Q & A session. No additional time will be allowed to research answers.

Within one (1) week of the Q & A session, the Design-Build Firm shall submit to the Department a written clarification letter summarizing the answers provided during the Q & A session. The questions, answers, and written clarification letter will become part of the Contract Documents and will be considered by the Department as part of the Technical Proposal. The Design-Build Firm shall not include information in the clarification letter which was not discussed during the Q&A session. In the event the Design-Build Firm includes additional information in the clarification letter which was not discussed during the Q&A session and is not otherwise included in the Technical Proposal, such additional information will not be considered by the Department during the evaluation of the Technical Proposal.

The Department will provide some (not necessarily all) proposed questions to each Design-Build Firm as it relates to their Technical Proposal approximately 24 hours before the scheduled Q & A session.

### G. Protest Rights

Any person who is adversely affected by the specifications contained in this Request for Proposal must file a notice of intent to protest in writing within seventy-two hours of the posting of this Request for Proposals. Pursuant to Sections 120.57(3) and 337.11, Florida Statutes, and Rule Chapter 28-110, F.A.C., any person adversely affected by the agency decision or intended decision shall file with the agency both a notice of protest in writing and bond within 72 hours after the posting of the notice of decision or intended decision, or posting of the solicitation with respect to a protest of the terms, conditions, and specifications contained in a solicitation and will file a formal written protest within 10 days after the filing of the notice of protest. The formal written protest shall be filed within 10 days after the date of the notice of protest if filed. The person filing the Protest must send the notice of intent and the formal written protest to:

Clerk of Agency Proceedings
Department of Transportation

605 Suwannee Street, MS 58
Tallahassee, Florida 32399-0458

Failure to file a notice of protest or formal written protest within the time prescribed in section 120.57(3), Florida Statutes, or failure to post the bond or other security required by law within the time allowed for filing a bond shall constitute a waiver of proceedings under Chapter 120 Florida Statutes.

### H. Non-Responsive Proposals

Proposals found to be non-responsive shall not be considered. Proposals may be rejected if found to be in nonconformance with the requirements and instructions herein contained. A proposal may be found to be non-responsive by reasons, including, but not limited to, failure to utilize or complete prescribed forms, conditional proposals, incomplete proposals, indefinite or ambiguous proposals, failure to meet deadlines and improper and/or undated signatures.

Other conditions which may cause rejection of proposals include evidence of collusion among Proposers, obvious lack of experience or expertise to perform the required work, submission of more than one proposal for the same work from an individual, firm, joint venture, or corporation under the same or a different name (also included for Design-Build Projects are those proposals wherein the same Engineer is identified in more than one proposal), failure to perform or meet financial obligations on previous contracts, employment of unauthorized aliens in violation of Section 274A (e) of the Immigration and Nationalization Act, or in the event an individual, firm, partnership, or corporation is on the United States Comptroller General's List of Ineligible Design-Build Firms for Federally Financed or Assisted Projects.

The Department will not give consideration to tentative or qualified commitments in the proposals. For example, the Department will not give consideration to phrases as “we may” or “we are considering” in the evaluation process for the reason that they do not indicate a firm commitment.

Proposals will also be rejected if not delivered or received on or before the date and time specified as the due date for submission.

Any proposal submitted by a Proposer that did not sign-in at the mandatory pre-proposal meeting will be non-responsive.

### I. Waiver of Irregularities

The Department may waive minor informalities or irregularities in proposals received where such is merely a matter of form and not substance, and the correction or waiver of which is not prejudicial to other Proposers. Minor irregularities are defined as those that will not have an adverse effect on the Department's interest and will not affect the price of the Proposals by giving a Proposer an advantage or benefit not enjoyed by other Proposers.

1. Any design submittals that are part of a proposal shall be deemed preliminary only.

2. Preliminary design submittals may vary from the requirements of the Design and Construction Criteria. The Department, at their discretion, may elect to consider those variations in awarding points to the proposal rather than rejecting the entire proposal.

3. In no event will any such elections by the Department be deemed to be a waiving of the Design and Construction Criteria.

4. The Proposer who is selected for the Project will be required to fully comply with the Design and Construction Criteria for the price bid, regardless that the proposal may have been based on a variation from the Design and Construction Criteria.

5. Proposers shall identify separately all innovative aspects as such in the Technical Proposal. An innovative aspect does not include revisions to specifications or established Department policies. Innovation should be limited to Design-Build Firm's means and methods, roadway alignments, approach to Project, use of new products, new uses for established products, etc.

6. The Proposer shall obtain any necessary permits for the project.

7. Those changes to the Design Concept may be considered together with innovative construction techniques, as well as other areas, as the basis for grading the Technical Proposals in the area of innovative measures.

### J. Modification or Withdrawal of Technical Proposal

Proposers may modify or withdraw previously submitted Technical Proposals at any time prior to the Technical Proposal due date. Requests for modification or withdrawal of a submitted Technical Proposal shall be in writing and shall be signed in the same manner as the Technical Proposal. Upon receipt and acceptance of such a request, the entire Technical Proposal will be returned to the Proposer and not considered unless resubmitted by the due date and time. Proposers may also send a change in sealed envelope to be opened at the same time as the Technical Proposal provided the change is submitted prior to the Technical Proposal due date.

### K. Department's Responsibilities

This Request for Proposal does not commit the Department to make studies or designs for the preparation of any proposal, nor to procure or contract for any articles or services.

The Department does not guarantee the details pertaining to borings, as shown on any documents supplied by the Department, to be more than a general indication of the materials likely to be found adjacent to holes bored at the site of the work, approximately at the locations indicated.

### L. Design-Build Contract

The Department will enter into a Lump Sum contract with the successful Design-Build Firm. In accordance with Section V, the Design-Build Firm will provide a schedule of values to the Department for their approval. The total of the Schedule of Values will be the lump sum contract amount.

The terms and conditions of this contract are fixed price and fixed time. The Design-Build Firm's submitted bid (time and cost) is to be a lump sum bid for completing the scope of work detailed in the Request for Proposal.

## IV. Disadvantaged Business Enterprise (DBE) Program.

### A. DBE Availability Goal Percentage:

The Department of Transportation has an overall, race-neutral DBE goal. This means that the State's goal is to spend a portion of the highway dollars with Certified DBE's as prime Design-Build Firms or as subcontractors. Race-neutral means that the Department believes that the overall goal can be achieved through the normal competitive procurement process. The Department has reviewed this Project and assigned a DBE availability goal shown in the Project Advertisement and on the bid blank/contract front page under "% DBE Availability Goal". The Department has determined that this DBE percentage can be achieved on this Project based on the number of DBE's associated with the different types of work that will be required.

Under 49 Code of Federal Regulations Part 26, if the overall goal is not achieved, the Department may be required to return to a race-conscious program where goals are imposed on individual contracts. The Department encourages Design-Build Firms to actively pursue obtaining bids and quotes from Certified DBE's.

The Department is reporting to the Federal Highway Administration the planned commitments to use DBE's. This information is being collected through the Department's Equal Opportunity Compliance (EOC) system.

### B. DBE Supportive Services Providers:

The Department has contracted with a consultant, referred to as DBE Supportive Services Provider, to provide managerial and technical assistance to DBE's. This consultant is also required to work with prime Design-Build Firms, who have been awarded contracts, to assist in identifying DBE's that are available to participate on the Project. The successful Design-Build Firm should meet with the DBE Supportive Services Provider to discuss the DBE's that are available to work on this Project. The current DBE Supportive Services Provider for the State of Florida can be found in the Equal Opportunity website at: http://www.dot.state.fl.us/equalopportunityoffice/serviceproviders.shtm

### C. Bidders Opportunity List:

The Federal DBE Program requires States to maintain a database of all Firms that are participating, or attempting to participate, on DOT-assisted contracts. The list must include all Firms that bid on prime contracts or bid or quote subcontracts on DOT-assisted Projects, including both DBE's and Non-DBE's.

A Bid Opportunity List should be submitted through the Equal Opportunity Compliance system which is available at the Equal Opportunity Office Website. This information should be returned to the Equal Opportunity Office within 3 days of submission.

## V. Project Requirements and Provisions for Work.

### A. Governing Regulations:

The services performed by the Design-Build Firm shall be in compliance with all applicable Manuals and Guidelines including the Department, FHWA, AASHTO, and additional requirements specified in this document. Except to the extent inconsistent with the specific provisions in this document, the current edition, including updates, of the following Manuals and Guidelines shall be used in the performance of this work. Current edition is defined as the edition in place and adopted by the Department at the date of advertisement of this contract with the exception of the Standard Specifications for Road and Bridge Construction (Divisions II & III), Special Provisions and Supplemental Specifications, Manual on Uniform Traffic Control Devices (MUTCD), Design Standards and Revised Index Drawings. The Design-Build Firm shall use the edition of the Standard Specifications for Road and Bridge Construction (Divisions II & III), Special Provisions and Supplemental Specifications, Design Standards and Revised Index Drawings in effect at the time the bid price proposals are due in the District Office. The Design-Build Firm shall use

the 2009 edition of the MUTCD (as amended in 2012). It shall be the Design-Build Firm's responsibility to acquire and utilize the necessary manuals and guidelines that apply to the work required to complete this Project. The services will include preparation of all documents necessary to complete the Project as described in Section I of this document.

1. Florida Department of Transportation Roadway Plans Preparation Manuals (PPM)
http://www.dot.state.fl.us/rddesign/PPMManual/PPM.shtm

2. Florida Department of Transportation Specifications Package Preparation Procedure
http://www2.dot.state.fl.us/proceduraldocuments/procedures/bin/630010005.pdf

3. Florida Department of Transportation Design Standards
http://www.dot.state.fl.us/rddesign/DesignStandards/Standards.shtm

4. Florida Department of Transportation Standard Specifications for Road and Bridge Construction (Divisions II & III), Special Provisions and Supplemental Specifications
http://www.dot.state.fl.us/specificationsoffice/Default.shtm

5. Florida Department of Transportation Surveying Procedure
http://www2.dot.state.fl.us/proceduraldocuments/procedures/bin/550030101.pdf

6. Florida Department of Transportation EFB User Handbook (Electronic Field Book)
http://www.dot.state.fl.us/surveyingandmapping/doc_pubs.shtm

7. Florida Department of Transportation Drainage Manual
http://www.dot.state.fl.us/rddesign/Drainage/ManualsandHandbooks.shtm

8. Florida Department of Transportation Soils and Foundations Handbook
http://www.dot.state.fl.us/structures/Manuals/SFH.pdf

9. Florida Department of Transportation Structures Manual
http://www.dot.state.fl.us/structures/DocsandPubs.shtm

10. Florida Department of Transportation Current Structures Design Bulletins
http://www.dot.state.fl.us/structures/Memos/currentbulletins.shtm

11. Florida Department of Transportation Computer Aided Design and Drafting (CADD) Manual
http://www.dot.state.fl.us/ecso/downloads/publications/Manual/default.shtm

12. Florida Department of Transportation Computer Aided Design and Drafting (CADD) Production Criteria Handbook
http://www.dot.state.fl.us/ecso/downloads/publications/CriteriaHandBook/

13. Florida Department of Transportation Production Criteria Handbook CADD Structures Standards
http://www.dot.state.fl.us/ecso/downloads/publications/CriteriaHandBook/

14. Instructions for Design Standards
http://www.dot.state.fl.us/structures/IDS/IDSportal.pdf

15. AASHTO – A Policy on Geometric Design of Highways and Streets
https://bookstore.transportation.org/collection_detail.aspx?ID=110

16. MUTCD - 2009
http://mutcd.fhwa.dot.gov/

17. Safe Mobility For Life Program Policy Statement
http://www2.dot.state.fl.us/proceduraldocuments/procedures/bin/000750001.pdf

18. Traffic Engineering and Operations Safe Mobility for Life Program
http://www.dot.state.fl.us/trafficoperations/Operations/SafetyisGolden.shtm

19. Florida Department of Transportation American with Disabilities Act (ADA) Compliance – Facilities Access for Persons with Disabilities Procedure
http://www2.dot.state.fl.us/proceduraldocuments/procedures/bin/625020015.pdf

20. Florida Department of Transportation Florida Sampling and Testing Methods
http://www.dot.state.fl.us/statematerialsoffice/administration/resources/library/publications/fstm/disclaimer.shtm

21. Florida Department of Transportation Flexible Pavement Coring and Evaluation Procedure
http://www.dot.state.fl.us/statematerialsoffice/administration/resources/library/publications/materialsmanual/documents/v1-section32-clean.pdf

22. Florida Department of Transportation Design Bulletins and Update Memos
http://www.dot.state.fl.us/rddesign/Bulletin/Default.shtm

23. Florida Department of Transportation Utility Accommodation Manual
http://www.dot.state.fl.us/specificationsoffice/utilities/UAM.shtm

24. AASHTO LRFD Bridge Design Specifications
https://bookstore.transportation.org/category_item.aspx?id=BR

25. Florida Department of Transportation Flexible Pavement Design Manual
http://www.dot.state.fl.us/rddesign/PM/publicationS.shtm

26. Florida Department of Transportation Rigid Pavement Design Manual
http://www.dot.state.fl.us/rddesign/PM/publicationS.shtm

27. Florida Department of Transportation Pavement Type Selection Manual
http://www.dot.state.fl.us/rddesign/PM/publicationS.shtm

28. Florida Department of Transportation Right-of-Way Manual
http://www.dot.state.fl.us/rightofway/Documents.shtm

29. Florida Department of Transportation Traffic Engineering Manual
http://www.dot.state.fl.us/TrafficOperations//Operations/Studies/TEM/TEM.shtm

30. Florida Department of Transportation Intelligent Transportation System Guide Book
http://www.dot.state.fl.us/TrafficOperations/Doc_Library/Doc_Library.shtm

31. Federal Highway Administration Checklist and Guidelines for Review of Geotechnical Reports and Preliminary Plans and Specifications
http://www.fhwa.dot.gov/engineering/geotech/pubs/reviewguide/checklist.cfm

32. AASHTO Guide for the Development of Bicycle Facilities
https://bookstore.transportation.org/collection_detail.aspx?ID=116

33. Federal Highway Administration Hydraulic Engineering Circular Number 18 (HEC 18).
http://www.fhwa.dot.gov/engineering/hydraulics/library_arc.cfm?pub_number=17

34. Florida Department of Transportation Manual of Uniform Minimum Standards for Design, Construction and Maintenance for Streets and Highways
http://www.dot.state.fl.us/rddesign/FloridaGreenbook/FGB.shtm

35. Florida Department of Transportation Project Development and Environment Manual, Parts 1 and 2
http://www.dot.state.fl.us/emo/pubs/pdeman/pdeman1.shtm

36. Florida Department of Transportation Driveway Information Guide
http://www.dot.state.fl.us/planning/systems/programs/sm/accman/pdfs/driveway2008.pdf

37. AASHTO Highway Safety Manual
http://www.highwaysafetymanual.org/

38. Florida Statutes
http://www.leg.state.fl.us/Statutes/index.cfm?Mode=View%20Statutes&Submenu=1&Tab=statutes&CFID=14677574&CFTOKEN=80981948

**B. Innovative Aspects**:

All innovative aspects shall be identified separately as such in the Technical Proposal.

An innovative aspect does not include revisions to specifications, standards or established Department policies. Innovation should be limited to Design-Build Firm's means and methods, roadway alignments, approach to Project, etc.

**1. Alternative Technical Concept (ATC) Proposals**

The ATC process allows innovation, flexibility, time and cost savings on the design and construction of Design-Build Projects while providing the best value for the public. Any deviation from the RFP that the Design-Build Firms seeks to obtain approval to utilize prior to Technical Proposal submission is, by definition, an ATC and therefore must be submitted to the Department for consideration through the ATC process. Any proposed material or technology not addressed by the RFP is considered an ATC and therefore must be submitted to the Department for consideration through the ATC process. The proposed ATC shall provide an approach that is equal to or better than the requirements of the RFP, as determined by the Department. ATC Proposals which reduce scope, quality, performance, or reliability should not be proposed. A proposed concept does not meet the definition of an ATC if the concept is contemplated by the RFP.

The Department will keep all ATC submissions confidential prior to the Final Selection of the Proposer to the fullest extent allowed by law, with few exceptions. Although the Department will issue an addendum for all ATC Proposals contained in the list below, the Department will endeavor to maintain confidentiality of the Design-Build Firms specific ATC proposal. Prior to approving ATC's which would result in the issuance of an Addendum as a result of the item being listed below, the Design-Build Firm will be given the option to withdraw previously submitted ATC proposals. Any approved ATC Proposal related to following requirements described by this RFP shall result in the issuance of an Addendum to the RFP:

- **Changes to the minimum pavement design requirements**
- **Median opening access management modifications**
- **Any right-of-way commitment modifications**
- **Approved typical section package modifications**

The following requirements described by this RFP may be modified by the Design-Build Firm provided they are presented in the One-on-One ATC discussion meeting, as defined below, and submitted to the Department for review and approval through the ATC process described herein. The Department may deem

a Proposal Non-Responsive should the Design-Build Firm include but fail to present and obtain Department approval of the proposed alternates through the ATC process. Department approval of an ATC proposal that is related to the items listed below will NOT result in the issuance of an Addendum to the RFP.

- **Any RFP requirement other than the items included in the previous paragraph's bulleted list**

**2. One-on-One ATC Proposal Discussion Meetings**

One-on-One ATC discussion meetings may be held in order for the Design-Build Firm to describe proposed changes to supplied basic configurations, Project scope, design criteria, and/or construction criteria. Each Design-Build Firm with proposed changes may request a One-on-One ATC discussion meeting to describe the proposed changes. The Design-Build Firm shall provide, by the deadline shown in the Schedule of Events of this RFP, a preliminary list of ATC proposals to be reviewed and discussed during the One-on-One ATC discussion meetings. This list may not be inclusive of all ATC's to be discussed but it should be sufficiently comprehensive to allow the Department to identify appropriate personnel to participate in the One-on-One ATC discussion meetings. The purpose of the One-on-One ATC discussion meeting is to discuss the ATC proposals, answer questions that the Department may have related to the ATC proposal, review other relevant information and when possible establish whether the proposal meets the definition of an ATC thereby requiring the submittal of a formal ATC submittal. The meeting should be between representatives of the Design-Build Firm and/or the Design-Build Engineer of Record and District/Central Office staff as needed to provide feedback on the ATC proposal. Immediately prior to the conclusion of the One-on-One ATC discussion meeting, the Department will advise the Design-Build Firm as to the following related to the ATC proposals which were discussed:

- The Proposal meets the criteria established herein as a qualifying ATC Proposal; therefore an ATC Proposal submission IS required, or
- The Proposal does not meet the criteria established herein as a qualifying ATC proposal since the Proposal is already allowed or contemplated by the original RFP; therefore an ATC Proposal submission is NOT required.

**3. Submittal of ATC Proposals**

All ATC submittals must be in writing and may be submitted at any time following the Shortlist Posting but shall be submitted prior to the deadline shown in the Schedule of Events of this RFP.

All ATC submittals are required to be on roll plots no larger than 36" or plan sheets and shall be sequentially numbered and include the following information and discussions:

a) Description: A description and conceptual drawings of the configuration of the ATC or other appropriate descriptive information, including, if appropriate, product details and a traffic operational analysis;

b) Usage: The locations where and an explanation of how the ATC would be used on the Project;

c) Deviations: References to requirements of the RFP which are inconsistent with the proposed ATC, an explanation of the nature of the deviations from the requirements and a request for approval of such deviations along with suggested changes to the requirements of the RFP which would allow the alternative proposal;

d) Analysis: An analysis justifying use of the ATC and why the deviation, if any, from the requirements of the RFP should be allowed;

e) Impacts: A preliminary analysis of potential impacts on vehicular traffic (both during and after construction), environmental impacts, community impacts, safety, and life-cycle Project and infrastructure costs, including impacts on the cost of repair, maintenance, and operation;

f) Risks: A description of added risks to the Department or third parties associated with implementation of the ATC;

g) Quality: A description of how the ATC is equal or better in quality and performance than the requirements of the RFP;

h) Operations: Any changes in operation requirements associated with the ATC, including ease of operations;

i) Maintenance: Any changes in maintenance requirements associated with the ATC, including ease of maintenance;

j) Anticipated Life: Any changes in the anticipated life of the item comprising the ATC.

### 4. Review and Approval of ATC Submittals

After receipt of the ATC submittal, the District Design Engineer (DDE), or designee, will communicate with the appropriate staff (i.e. District Structures Design Engineer, District Construction Engineer, District Maintenance Engineer, State Structures Engineer, State Roadway Design Engineer, FHWA, as applicable) as necessary, and respond to the Design-Build Firm in writing within 14 calendar days of receipt of the ATC submittal as to whether the ATC is acceptable, not acceptable, or requires additional information. If the DDE, or designee, determines that more information is required for the review of an ATC, questions should be prepared by the DDE, or designee, to request and receive responses from the Design-Build Firm. The review should be completed within 14 calendar days of the receipt of the ATC submittal. If the review will require additional time, the Design-Build Firm should be notified in advance of the 14 day deadline with an estimated timeframe for completion.

Approved Design Exceptions or Design Variations required as part of an approved ATC submittal will result in the issuance of an addendum to the RFP notifying all Shortlisted Design-Build Firms of the approved Design Exception(s) or Design Variation(s). Such a change will be approved by FHWA, as applicable. Prior to approving ATC's which would result in the issuance of an Addendum as a result of a Design Exception and/or Design Variation, the Design-Build Firm will be given the option to withdraw previously submitted ATC proposals.

The Department reserves the right to disclose to all Design-Build Firms, via an Addendum to the RFP, any errors of the RFP that are identified during the One-on-One ATC meetings, except to the extent that the Department determines, in its sole discretion, such disclosure would reveal confidential or proprietary information of the ATC.

ATC's are accepted by the Department at the Department's discretion and the Department reserves the right to reject any ATC submitted. The Department reserves the right to issue an Addendum to the RFP based upon a previously denied ATC Proposal, without regard to the confidentiality of the denied ATC Proposal.

The Project file will clearly document all communications with any Design-Build Firm.

**5. Incorporation of Approved ATC's into the Technical Proposal**

The Design-Build Firm will have the option to include any Department Approved ATC's in the Technical Proposal. The Proposal Price should reflect any incorporated ATC's. All approved ATC's that are incorporated into the Technical Proposal must be clearly identified in the Technical Proposal Plans and/or Roll Plots. The Technical Proposal shall also include a listing of the incorporated, approved ATCs.

By submitting a Proposal, the Design-Build Firm agrees, if it is not selected, to disclosure of its work product to the successful Design-Build Firm, only after receipt of the designated stipend (if applicable) or after award of the contract whichever occurs first.

**C. Geotechnical Services:**

1. **General Conditions**:

The Design-Build Firm shall be responsible for identifying and performing any geotechnical investigation, analysis and design of roadways, foundations, foundation construction, foundation load and integrity testing, and inspection dictated by the Project needs in accordance with Department guidelines, procedures and specifications. All geotechnical work necessary shall be performed in accordance with the Governing Regulations. The Design-Build Firm shall be solely responsible for all geotechnical aspects of the Project.

**D. Department Commitments:**

The Design-Build Firm will be responsible for adhering to the project commitments identified below:

1. All right-of-way commitments and agreements
2. Median opening locations

**E. Environmental Permits:**

All applicable data shall be prepared in accordance with Chapter 373 and 403, Florida Statutes, Chapters 40 and 62, F.A.C.; Rivers and Harbors Act of 1899, Section 404 of the Clean Water Act, 23 CFR 771, 23 CFR 636, and parts 114 and 115, Title 33, Code of Federal Regulations. Preparation of all documentation related to the acquisition of all applicable permits will be the responsibility of the Design-Build Firm. Preparation of complete permit packages will be the responsibility of the Design-Build Firm. The Design-Build Firm is responsible for the accuracy of all information included in permit application packages. As the permittee, the Department is responsible for reviewing, approving, and signing, the permit application package including all permit modifications, or subsequent permit applications. This applies whether the project is Federal or state funded. Once the Department has approved the permit application, the Design-Build Firm is responsible for submitting the permit application to the environmental permitting agency. A copy of any and all correspondence with any of the environmental permitting agencies shall be sent to DEMO and the Department Project Manager. If any agency rejects or denies the permit application, it is the Design-Build Firm's responsibility to make whatever changes necessary to ensure the permit application is approved. The Design-Build Firm shall be responsible for any necessary permit extensions or re-permitting in order to keep the environmental permits valid throughout the construction period. The Design-Build Firm shall provide the Department with draft copies of any and all permit applications, including responses to agency Requests for Additional Information, requests to modify the permits and/or requests for permit extensions, for review and approval by the Department prior to submittal to the agencies.

The Design-Build Firm will be required to pay all permit fees. Any fines levied by permitting agencies shall be the responsibility of the Design-Build Firm. The Design-Build Firm shall be responsible for complying with all permit conditions.

The Department is responsible for providing mitigation of all wetland impacts identified in the conceptual plans. If any design modifications by the Design-Build Firm propose to increase the amount of these wetland impacts, the Design-Build Firm shall be responsible for providing the Department information on the amount and type of wetland impacts as soon as the impacts are identified (including temporary impacts and/or any anticipated impacts due to construction staging or construction methods). Prior to submitting a permit modification to a regulatory agency, the Design-Build Firm shall provide the Department a draft of all supporting information. The Department will have up to 15 calendar days (excluding weekends and Department observed holidays) to review and comment on the draft permit package. The Design-Build Firm will address all comments by the Department and obtain Department approval, prior to submittal of the draft permit. The Design-Build Firm shall be solely responsible for all time and costs associated with providing the required information to the Department, as well as the time required by the Department to perform its review of the permit package, prior to submittal of the permit application(s) by the Design-Build Firm to the regulatory agencies.

Any additional mitigation required due to design modifications proposed by the Design-Build Firm shall be the responsibility of the Design-Build Firm and shall be satisfied through the purchase of mitigation bank credits. The Design-Build Firm shall purchase credits directly from a permitted mitigation back. In the event that permitted mitigation bank credits are unavailable or insufficient to meet the project needs, the Design-Build Firm will be responsible for providing alternative mitigation consistent with the provisions of section 373.4137, Florida Statutes, and acceptable to the permitting agencies. If the mitigation through 373.4137, F.S. is required for the project, the Design-Build Firm shall provide appropriate funds to the Department at the time of permit issuance and the Department will then transfer the mitigation funds to the appropriate water management district. The Design-Build Firm shall be solely responsible for all costs associated with permitting activities and shall include all necessary permitting activities in their schedule.

The Department has budgeted or paid WMD for the wetland impacts identified in the conceptual plans. These amounts may not be all inclusive of the wetland impacts occurring based on the design concept in the conceptual plans. The allocations are shown below:

| | | |
|---|---|---|
| 218605-6-C8-01 | Total Acres = 1 AC | Budgeted = To be paid in FY2016 |
| 218605-7-C8-01 | Total Acres = 1 AC | Budgeted = To be paid in FY2016 |

The Design-Build Firm is responsible for minimizing wetland impacts to the greatest extent possible. If minimization of impacts is achieved by the Design-Build Firm, the Department will NOT reimburse the Design-Build Firm for any mitigation cost savings.

The Design-Build Firm is required to include any necessary utility relocations in its plans and permit applications for relocations occurring within the right-of-way.

However, notwithstanding anything above to the contrary, upon the Design-Build Firm's preliminary request for extension of Contract Time, pursuant to 8-7.3, being made directly to the District Construction Engineer, the Department reserves unto the District Construction Engineer, in their sole and absolute discretion, according to the parameters set forth below, the authority to make a determination to grant a non-compensable time extension for any impacts beyond the reasonable control of the Design-Build Firm

in securing permits. Furthermore, as to any such impact, no modification provision will be considered by the District Construction Engineer unless the Design-Build Firm clearly establishes that it has continuously from the beginning of the Project aggressively, efficiently and effectively pursued the securing of the permits including the utilization of any and all reasonably available means and methods to overcome all impacts. There shall be no right of any kind on behalf of the Design-Build Firm to challenge or otherwise seek review or appeal in any forum of any determination made by the District Construction Engineer under this provision.

**F. Railroad Coordination – N/A**

**G. Survey:**

If the Design-Build Firm chooses to utilize the existing survey, the Design-Build Firm shall be responsible for verifying the accuracy of the information being provided and for providing all other surveys necessary for the Project.

The Design-Build Firm shall perform all surveying and mapping services necessary to complete the Project. Survey services must also comply with all pertinent Florida Statutes and applicable rules in the Florida Administrative Code. All field survey data will be furnished to the District Surveyor in a Department approved digital format, readily available for input and use in CADD Design files. All surveying and mapping work must be accomplished in accordance with the Department's Surveying Procedure, Topic Nos. 550-030-101; Right-of-Way Mapping Procedure, Topic No. 550-030-015; Aerial Surveying Standards for Transportation Projects Procedure, Topic No. 550-020-002. This work must comply with Chapter 5J-17, F.A.C., pursuant to Section 472.027, F.S. and the District 3 Quality Control documents for Surveying and Mapping. This survey also must comply with Chapter 177, F.S.

The Design-Build Firm will be responsible for all photogrammetric work necessary to interpret measure, digitize and compile, by stereoscopic techniques, the mapping and survey data from the aerial photography, as required for this Project.

**H. Verification of Existing Conditions:**

The Design-Build Firm shall be responsible for verification of existing conditions, including research of all existing Department records and other information.

By execution of the contract, the Design-Build Firm specifically acknowledges and agrees that the Design-Build Firm is contracting and being compensated for performing adequate investigations of existing site conditions sufficient to support the design developed by the Design-Build Firm and that any information is being provided merely to assist the Design-Build Firm in completing adequate site investigations. Notwithstanding any other provision in the contract documents to the contrary, no additional compensation will be paid in the event of any inaccuracies in the preliminary information.

**I. Submittals:**

**1. Component Submittals:**

The Design-Build Firm may submit components of the contract plans set instead of submitting the entire contract plan set; however, sufficient information from other components must be provided to allow for a complete review. In accordance with the Plans Preparation Manual, components of the contract plans set are roadway, signing and pavement marking, signalization, ITS, lighting, landscape, architectural,

structural, and toll facilities.

The Design-Build Firm may divide the project into separate areas and submit components for each area; however, sufficient information on adjoining areas must be provided to allow for a complete review. Submittals for bridges are limited to foundation, substructure, and superstructure. For bridges over navigable waterways, submittals are limited to foundation, approach substructure, approach superstructure, main unit substructure, and main unit superstructure. Further dividing the foundation, substructure, or superstructure into Pier 2, Abutment 1, Span 4, etc will not be accepted.

**2. Phase Submittals:**

The Design-Build Firm shall provide the documents for each phase submittal listed below to the Department's Project Manager. The particular phase shall be clearly indicated on the documents. The Department's Project Manager will send the documents to the appropriate office for review and comment. Once all comments requiring a response from the Design-Build Firm have been satisfactorily resolved as determined by the Department, the Department's Project Manager will initial, date and stamp the signed and sealed plans and specifications as "Released for Construction".

One (1) month prior to the 90% submittal listed below, the Design-Build Firm will be required to prepare and submit to the Department for review phase submittal notification letters for Local Governments. The final signed letters are to be sent to the local governments at the same time the submittal is sent to the Department for review and specifically discuss the 90% phase review for the Project. These letters shall meet the following requirements:

The Design-Build Firm shall prepare a letter for the District Secretary's signature for each City and/or County Commissioner, TPO, appropriate public official, etc. when the plans are ready to be submitted to their designated contact's office at the 90% submittal. The letter addressed to the designated contact (county engineer, city administrator, etc.) shall be prepared for the District Design Build Program Manager's signature. The District Secretary signs elected official letters and the District Design Build Program Manager signs non-elected official letters. A letter and a set of plans shall also be provided to the designated contact within the affected MPO area. Examples of this correspondence can be made available upon request to the Department's Design Project Manager.

When commissioners, council members, and/or MPO area representatives are notified that Phase Submittals have been sent to their designated contact's office, the notice shall include the following:

- FPID Number
- State Road Number and Local Road Name
- Project Limits
- Type of Work
- Construction Start Date
- Estimated Duration of Construction
- Department contact persons
- A fourteen (14) calendar day deadline for providing comments

Each comment or request provided by the local government shall be evaluated by the Design-Build Firm and discussed with the Department's Design Project Manager. Responses will be prepared by the Design-Build Firm for the District Secretary or District Design Build Program Manager's signature. All comments or requests shall be responded to in writing within thirty (30) days of receipt of comments.

The Design-Build Firm shall pay postage for these notifications and will be responsible for the mail-out effort (printing, envelope stuffing, stamping, etc.).

**90% Phase Submittal**
3 copies of 11" X 17" plans
3 copies of Landscape Opportunity Plans
2 signed and sealed geotechnical reports
2 copies of Settlement and Vibration Monitoring Plan (SVMP) for Department acceptance and update throughout the construction period
2 copies of Bridge Hydraulic Report
2 copies of design documentation
1 copy of Technical Special Provisions, if applicable
2 copies of Bridge Load Rating Calculations
2 copies of completed Bridge Load Rating Summary Detail Sheet
2 copies of Load Rating Summary Form
2 copies of Utility Conflict Matrix
3 CD's containing the above information in .pdf format

**Final Submittal**
1 set of signed and sealed 11" X 17" plans (including Landscape Opportunity Plans)
2 sets of signed and sealed design documentation
2 copies of Settlement and Vibration Monitoring Plan (SVMP)
2 signed and sealed copy of the Bridge Load Rating Summary Detail Sheet
2 signed and sealed copy of the Load Rating Summary Form
1 signed and sealed Construction Specifications Package
1 signed and sealed Technical Special Provisions, if applicable
3 CD's containing the above information in .pdf format

**All signed and sealed documents will be signed and sealed by hand (not electronically).**

**3. Requirements to Begin Construction:**

The Design-Build Firm may choose to begin construction prior to completion of the Phase Submittals and the Department stamping the plans and specifications Released for Construction except for bridge construction. To begin construction the Design-Build Firm shall submit signed and sealed plans for the specific activity; submit a signed and sealed Construction Specifications Package or Supplemental Specifications Package; obtain regulatory permits as required for the specific activity; obtain utility agreements and permits, if applicable; and provide five (5) days notice before starting the specific activity. The plans to begin construction may be in any format including report with details, 8½" X 11" sheets, or 11" X 17" sheets, and only the information needed by the Design-Build Firm to construct the specific activity needs to be shown. Beginning construction prior to the Department stamping the plans and specifications Released for Construction does not reduce or eliminate the Phase Submittal requirements.

**As-Built Set:**

The Design-Build Firm's Professional Engineer in responsible charge of the Project's design shall professionally endorse (sign, seal, and certify) the As-Built Plans, the special provisions and all reference and support documents. The professional endorsement shall be performed in accordance with the Department's Plans Preparation Manual.

The Design-Build Firm shall complete the As-Built Plans as the Project is being constructed. All changes made subsequent to the "Released for Construction" Plans shall be signed/sealed by the EOR. The As-Built Plans shall reflect all changes initiated by the Design-Build Firm or the Department in the form of revisions. The As-Built Plans shall be submitted prior to Project completion for Department review and acceptance as a condition precedent to the Departments issuance of Final Acceptance.

The Department shall review, certify, and accept the As-Built Plans prior to issuing Final Acceptance of the project in order to complete the As-Built Plans.

The Department shall certify the As-Built Plans per Chapter 5.12 of the Construction Project Administration Manual (TOPIC No. 700-000-000).

The Design-Build Firm shall furnish to the Department, upon Project completion, the following:

- 1 set of 11" X 17" signed and sealed plans
- 2 sets of 11 "X 17" copies of the signed and sealed plans
- 2 copies of Landscape Opportunity Plans
- 1 signed and sealed Bridge Load Rating based on as-built conditions, if applicable
- 2 sets of final documentation (if different from final component submittal)
- 3 Final Project CD's

**4. Milestones:**

Component submittals, in addition to the plan submittals listed in the previous section will be required. In addition to various submittals mentioned throughout this document the following milestone submittals will be required.

- Utility Clearance Certification
- Permit applications for Department review
- Responses to RAIs from permitting agencies for Department review
- Approved permits package

**5. Railroad Submittals – N/A**

**J. Contract Duration:**

The Design-Build Firm shall establish the Contract Duration for the subject Project. In no event shall the Contract Duration exceed **680 calendar days**. The Proposed Contract Duration shall be submitted with the Bid Price Proposal. Any utility relocations necessary for the project shall be completed within the contract duration established for the project.

The Department anticipates it will take 6 months to obtain permits for the project. This timeframe begins at the date the permitting agency confirms a complete application has been received. The Design-Build Firm shall determine contract duration in consideration of this timeframe.

**K. Project Schedule:**

The Design-Build Firm shall submit a Schedule, in accordance with Subarticle 8-3.2 (Design-Build

Division I Specifications). The Design-Build Firm's Schedule shall allow for up to fifteen (15) calendar days (excluding weekends and Department observed Holidays) review time for the Department's review of all submittals.

The Department will perform the review of Foundation Construction submittals in accordance with Section 455.

The following Special Events have been identified in accordance with Specification 8-6.4:

Pensacola Interstate Fair and Snowball Derby - 11 days in October/November
Spring Break 2016 dates – March 11th thru March 27th
2017 dates – March 10th thru March 26th
2018 dates – March 9th thru March 25th

Include only applicable activities in the project schedule as listed in the Schedule of Values and those listed below:

- Anticipated Contract Notice to Proceed Date
- Design Submittals
- Shop Drawing Submittals
- Design Survey
- Submittal Reviews by the Department and FHWA
- Design Review / Acceptance Milestones
- Materials Quality Tracking
- Geotechnical Investigation
- Department right-of-way clearance dates
- Notice to Proceed for construction date
- Start of Construction
- Clearing and Grubbing
- Construction Mobilization
- Embankment/Excavation
- Environmental Permit Acquisition
- Foundation Design
- Foundation Construction
- Substructure Design
- Substructure Construction
- Superstructure Design
- Superstructure Construction
- Walls Design
- Walls Construction
- Roadway Design
- Roadway Construction
- Signing and Pavement Marking Design
- Signing and Pavement Marking Construction
- Signalization Design
- Signalization Construction
- Lighting Design, if applicable
- Lighting Construction, if applicable

- Maintenance of Traffic Design
- Landscape Opportunity Plans
- Permit Submittals
- Maintenance of Traffic Set-Up (per duration)
- Erosion Control
- Holidays and Special Events (shown as non-work days)
- Additional Construction Milestones as determined by the Design-Build Firm
- Final Completion Date for All Work

**L. Key Personnel/Staffing:**

The Design-Build Firm's work shall be performed and directed by key personnel identified in the Letter of Interest and/or Technical Proposal by the Design-Build Firm. In the event a change in key personnel is requested, the Design-Build Firm shall submit the qualifications of the proposed key personnel and include the reason for the proposed change. Any changes in the indicated personnel shall be subject to review and approval by the District Construction Engineer. The Department shall have sole discretion in determining whether or not the proposed substitutions in key personnel are comparable to the key personnel identified in the Letter of Interest and/or Technical Proposal. The Design-Build Firm shall have available professional staff meeting the minimum training and experience set forth in Florida Statute Chapter 455.

**M. Partner/Teaming Arrangement:**

Partner/Teaming Arrangements of the Design-Build Firm (i.e., Prime Contractor or Lead Design Firm) cannot be changed after submittal of the Letter of Interest without written consent of the Department. In the event a change in the Partner/Teaming Arrangement is requested, the Design-Build Firm shall submit the reason for the proposed change. Any changes in the Partner/Teaming Arrangement shall be subject to review and approval by the Department's Chief Engineer. The Department shall have sole discretion in determining whether or not the proposed substitutions in Partner/Teaming Arrangements are comparable to the Partner/Teaming Arrangements identified in the Letter of Interest and/or Technical Proposal.

**N. Meetings and Progress Reporting:**

The Design-Build Firm shall anticipate periodic meetings with Department personnel and other agencies as required for resolution of design and/or construction issues. These meetings may include, but are not limited to:

- Department technical issue resolution
- Local government agency coordination
- Maintenance of Traffic Workshop
- Pavement Design Meeting
- Permit agency coordination
- Scoping Meetings
- Post Submittal Design Review Meetings

During design, the Design-Build Firm shall meet with the Department's Project Manager on a monthly basis and provide a one month look ahead of the activities to be completed during the upcoming month.

During construction, the Design-Build Firm shall meet with the Department's Project Manager on a weekly basis and provide a one-week look ahead for activities to be performed during the coming week.

The Design-Build Firm shall, on a monthly basis, provide written progress reports that describe the items of concern and the work performed on each task.

**O. Public Involvement:**

1. **General:**

Public involvement is an important aspect of the Project. Public involvement includes communicating to all interested persons, groups, and government organizations information regarding the development of the Project. The Department will be responsible for public involvement with respect to direct coordination with the public. The Design-Build Firm will continue to be part of the Public Involvement effort but on a limited basis as described below.

2. **Community Awareness:**

The Design-Build Firm will review and comment on a Community Awareness Program if requested by the Department.

3. **Public Meetings:**

The Design-Build Firm shall provide all support necessary for the Department to hold various public meetings, which may include:

- Kick-off or introductory meeting
- Metropolitan Planning Organization (MPO) Citizens Advisory Committee Meetings
- MPO Transportation Technical Committee Meetings
- MPO Meetings
- Public Information Meetings
- Elected and appointed officials
- Special interest groups (private groups, homeowners associations, environmental groups, minority groups and individuals)

The Design-Build Firm shall include attendance at two meetings per month for the term of the contract to support the public involvement program. The Department anticipates having one Construction Public Meeting for the contract.

For any of the above type meetings the Design-Build Firm shall provide all technical assistance, data and information necessary such as display boards, printed material, video graphics, computerized graphics, etc. This includes workshops, information meetings, and public hearings.

The Design-Build Firm shall, on an as-needed basis, attend the meetings with an appropriate number of personnel to assist the Department. The Design-Build Firm shall forward all requests for group meetings to the Department's Project Manager. The Design-Build Firm shall inform the Department of any meetings with individuals that occur without prior notice.

4. **Public Workshops, Information Meetings:**

The Design-Build Firm shall provide all the support services listed in No. 3 above.

All legal/display ads announcing workshops, information meetings, and public meetings will be prepared and paid for by the Department.

The Department will be responsible for the legal/display advertisements for design concept acceptance. The Department will be responsible for preparing and mailing (includes postage) for all letters announcing workshops and information meetings.

5. **Public Involvement Data:**

The Design-Build Firm is responsible for the following:

- Coordinating with the Department's Public Information Office.
- Identifying possible permit and review agencies and providing names and contact information for these agencies to the Department.
- Providing required expertise (staff members) to assist the Department on an as-needed basis.
- Preparing color graphic renderings and/or computer generated graphics to depict the proposed improvements for coordination with the Department, local governments, the Urban Design Guidelines Committee, and other agencies.

The collection of public input occurs throughout the life of the Project and requires maintaining files, newspaper clippings, letters, and especially direct contacts before, during and after any of the public meetings. The Design-Build Firm will be responsible for maintaining a public involvement file to include the information previously listed and sending articles such as those mentioned shall to the Department for its use and records.

In addition to collecting public input data, the Design-Build Firm may be asked by the Department to prepare responses to any public inquiries as a result of the public involvement process. The Department shall review all responses prior to mailing.

**P. Quality Management Plan (QMP):**

1. **Design:**

The Design-Build Firm shall be responsible for the professional quality, technical accuracy and coordination of all surveys, designs, drawings, specifications, geotechnical and other services furnished by the Design-Build Firm under this contract.

The Design-Build Firm shall provide a Design Quality Management Plan, which describes the Quality Control (QC) procedures to be utilized to verify, independently check, and review all design drawings, specifications, and other documentation prepared as a part of the contract. In addition the QMP shall establish a Quality Assurance (QA) program to confirm that the Quality Control procedures are followed. The Design-Build Firm shall describe how the checking and review processes are to be documented to verify that the required procedures were followed. The QMP may be one utilized by the Design-Build Firm, as part of their normal operation or it may be one specifically designed for this Project. The Design-Build Firm shall submit a QMP within fifteen (15) working days following issuance of the written Notice to Proceed. A marked up set of prints from the Quality Control review shall be available for the Department's review with each review submittal if requested. The responsible Professional Engineers or Professional Surveyor that performed the Quality Control review, as well as the QA manager will sign a statement certifying that the review was conducted.

The Design-Build Firm shall, without additional compensation, correct all errors or deficiencies in the surveys, designs, drawings, specifications and/or other services.

2. **Construction:**

The Design-Build Firm shall be responsible for developing and maintaining a Construction Quality Control Plan in accordance with Section 105 of Standard Specifications which describes their Quality Control procedures to verify, check, and maintain control of key construction processes and materials.

The sampling, testing and reporting of all materials used shall be in compliance with the Sampling, Testing and Reporting Guide (STRG) provided by the Department. The Design-Build Firm will use the Department's database(s) to allow audits of materials used to assure compliance with the STRG. The Department has listed the most commonly used materials and details in the Department's database. When materials being used are not in the Department's database list, the Design-Build Firm shall use appropriate material details from the STRG to report sampling and testing. Refer to the State Materials Office website for instructions on gaining access to the Department's databases: http://www.dot.state.fl.us/statematerialsoffice/quality/programs/qualitycontrol/contractor.shtm

Prepare and submit to the Engineer a Job Guide Schedule (JGS) using the Department database in accordance with Section 105 of Standard Specifications.

The Department shall maintain its rights to inspect construction activities and request any documentation from the Design-Build Firm to ensure quality products and services are being provided in accordance with the Department's Materials Acceptance Program.

**Q. Liaison Office:**

The Department and the Design-Build Firm will designate a Liaison Office and a Project Manager who shall be the representative of their respective organizations for the Project.

**R. Engineers Field Office: - N/A**

**S. Schedule of Values:**

The Design-Build Firm is responsible for submitting estimates requesting payment. Estimates requesting payment will be based on the completion or percentage of completion of tasks as defined in the schedule of values. Final payment will be made upon final acceptance by the Department of the Design-Build Project. Tracking DBE participation will be required under normal procedures according to the Construction Project Administration Manual. The Design-Build Firm must submit the schedule of values to the Department for approval. No estimates requesting payment shall be submitted prior to Department approval of the schedule of values.

Upon receipt of the estimate requesting payment, the Department's Project Manager will make judgment on whether or not work of sufficient quality and quantity has been accomplished by comparing the reported percent complete against actual work accomplished.

**T. Computer Automation:**

The Project shall be developed utilizing computer automation systems in order to facilitate the development of the contract plans. Various software and operating systems were developed to aid in assuring quality and conformance with Department policies and procedures. The Department supports MicroStation and GEOPAK as its standard graphics and roadway design platform as well as Autodesk's AutoCAD Civil 3D as an alternate platform. Seed Files, Cell Libraries, User Commands, MDL Applications and related programs developed for roadway design and drafting are in the FDOT CADD Software Suite. Furnish As-Built documents for all building related components of the project in AutoCAD format. It is the responsibility of the Design-Build Firm to obtain and utilize current Department releases of all CADD applications.

The Design-Build Firm is required to sign and seal the plans, specifications, documentation, etc. by hand (not electronically).

The Design-Build Firm will be required to furnish the Project's CADD files after the plans have been Released for Construction. The Design-Build Firm's role and responsibilities are defined in the Department's CADD Manual. The Design-Build Firm will be required to submit final documents and files which shall include complete CADD design and coordinate geometry files in Intergraph / Micro station format.

As part of the As-Built Set deliverables, field conditions shall be incorporated into MicroStation and/or AutoCAD design files. Use the cloud revision utility as well as an "AB" revision triangle to denote field conditions on plan sheets.

**U. Construction Engineering and Inspection:**

The Department is responsible for providing Construction Engineering and Inspection (CEI) and Quality Assurance Engineering.

The Design-Build Firm is subject to the Department's Independent Assurance (IA) Procedures.

**V. Testing:**

The Department or its representative will perform verification and resolution sampling and testing activities at both on site, as well as, off site locations such as pre-stress plants, batch plants, structural steel and weld, fabrication plants, etc. in accordance with the latest Specifications.

**W. Value Added:**

The Design-Build Firm may provide Value Added Project Features, in accordance with Article 5-14 of the Specifications for the following features:

- Roadway features
- Roadway drainage systems,
- Approach slabs

- Superstructure
- Substructure
- Concrete defects
- And any other products or features the Design-Build Firm desires.

The Design-Build Firm shall develop the Value Added criteria, measurable standards, and remedial work plans in the Design-Build Firm's Technical Proposal for features proposed by the Design-Build Firm.

The Design-Build Firm shall provide at a minimum the three (3) year warranty period as defined by Article 338, Value Added Asphalt Pavement, Division II, Standard Specifications. The Design-Build Firm may provide a longer warranty period than the three (3) year minimum.

The Design-Build Firm shall provide at a minimum the five (5) year warranty period as defined by Article 475, Value Added Bridge Components, Division II, Value Added Specifications. The Design-Build Firm may provide a longer warranty period than the five (5) year minimum.

**X. Adjoining Construction Projects:**

The Design-Build Firm shall be responsible for coordinating construction activities with other construction Projects that are impacted by or impact this Project. This includes Projects under the jurisdiction of local governments, the Department, or other regional and state agencies.

**Y. Issue Escalation**:

In the event issues arise during prosecution of the work, the resolution of those issues will be processed as described below unless revised by a project specific Partnering Agreement:

The escalation process begins with the Construction Project Manager. All issues are to be directed to the Construction Project Manager. If the issue cannot be resolved by the Construction Project Manager in coordination with the Resident Engineer and Design Project Manager as applicable, the Construction Project Manager shall forward the issue to the District Construction Engineer who will coordinate with the District Design Engineer, as applicable. Each level shall have a maximum of five (5) calendar days (excluding weekends and Department observed holidays) to answer, resolve, or address the issue. The Design-Build Firm shall provide all supporting documentation relative to the issue being escalated. The five (5) calendar day period (excluding weekends and Department observed holidays) begins when each level in the issue escalation process has received all required supporting documentation necessary to arrive at an informed and complete decision. The five (5) calendar day period (excluding weekends and Department observed holidays) is a response time and does not infer resolution. Questions asked by the Department may be expressed verbally and followed up in writing within one (1) calendar day (excluding weekends and Department observed holidays). Responses provided by the Design-Build Firm may be expressed verbally and followed up in writing within one (1) working day. Once a response is received from the District Construction Engineer, the Construction Project Manager will respond to the Design-Build Firm in a timely manner but not to exceed three (3) calendar days (excluding weekends and Department observed holidays).

The Design-Build Firm shall provide a similar issue escalation process for their organization with personnel of similar levels of responsibility.

Should an impasse develop, the Dispute Review Board shall assist in the resolution of disputes and claims arising out of the work on the Contract.

## VI. Design and Construction Criteria.

### A. General:

All design and construction work completed under the Contract shall be in accordance with the United States Standard Measures.

### B. Vibration and Settlement Monitoring:

The Department has identified vibration sensitive sites along the Project corridor. These specific locations include residential structures along West Salt Grass Dr. located south of SR 10 (US 90A / Nine Mile Rd.) (between Sta. 179+00 to Sta. 212+00). The Design-Build Firm shall be responsible for the identification of and coordination with vibration sensitive sites impacted by the Work for the duration of the construction period.

The Design-Build Firm is responsible for evaluating the need for, design of, and the provision of any necessary precautionary features to protect existing structures from damage, including, at a minimum, selecting construction methods and procedures that will prevent damage. The Design-Build Firm shall submit for Department acceptance a Settlement and Vibration Monitoring Plan (SVMP) as part of the 90% plans submittal and update the SVMP throughout the Construction Period. The Design-Build Firm is responsible for establishing maximum settlement and vibration thresholds equivalent to or lower than the Department Specification requirements for all construction activities, including vibratory compaction operations and excavations.

Submittals for Settlement and Vibration Monitoring Plan (SVMP) shall include the following as a minimum:

- Identify any existing structures in addition to those identified that will be monitored for vibrations during the construction period.
- Establish the maximum vibration levels. The maximum vibration levels stated for existing structures shall not be exceeded.
- Identify any existing structures in addition to those identified that will be monitored for settlement during the construction period.
- Establish the maximum settlement levels for the existing structures that must not be exceeded. The maximum settlement level stated shall not be exceeded.
- Identify any existing structures in addition to those identified that require pre-construction and post-construction surveys.

The Department will perform the review of Vibration and Settlement submittals in accordance with Department Specifications.

### C. Geotechnical Services:

**Driven Pile Foundations for Bridges and Major Structures**

The Design-Build Firm shall determine whether the resistance factors used for pile design will be based on static/statnamic load testing. Prepare a Technical Special Provision (TSP) for tests other than the Modified Quick Test, such as Osterberg Cell Load Test or Statnamic Load Test. For Osterberg Cell Load Tests use the same loading and unloading intervals, as well as the same loading times specified for the Modified Quick Test. Comply with the instrumentation requirements of 455-2.4.

The Design-Build Firm shall be responsible for the following:

1. Selection of pile type and size.
2. Selection of test pile lengths, locations and quantity of test piles.
3. Selection of pile testing methods.
4. Determining the frequency of such testing unless otherwise stated herein.
5. Performance of the selected test pile program, including dynamic load test personnel and equipment. The Department may observe the installation of test piles and all pile testing.
6. Preparing and submitting a Pile Installation Plan for the Department's acceptance.
7. Selection of production pile lengths.
8. Development of the driving criteria.
9. Driving piles to the required capacity and minimum penetration depth.
10. Inspecting and Recording the pile driving information.
11. Submitting Foundation Certification Packages.
12. Providing safe access, and cooperating with the Department in verification of the piles, both during construction and after submittal of the certification package.

**Drilled Shaft Foundations for Bridges and Miscellaneous Structures**

The Design-Build Firm shall determine whether the resistance factors used for drilled shaft design will be based on static/statnamic load testing. Prepare a Technical Special Provision (TSP) for tests other than the Modified Quick Test, such as Osterberg Cell Load Test or Statnamic Load Test. For Osterberg Cell Load Tests use the same loading and unloading intervals, as well as the same loading times specified for the Modified Quick Test. Comply with the instrumentation requirements of 455-2.4.

The Design-Build Firm shall be responsible for the following:

1. Evaluating geotechnical conditions to determine the drilled shaft diameter and length and construction methods to be used.
2. Performing the subsurface investigation and drilling pilot holes prior to establishing the drilled shaft tip elevations and socket requirements. For redundant drilled shaft bridge foundations, perform at least one test boring in accordance with the Soils and Foundations Handbook at each bent/pier.
3. Determining the locations of the load test shafts and the types of tests that will be performed.

4. Performing pilot borings for test holes (also known as test shafts or method shafts) and load test shafts and providing the results to the Department at least one (1) working day before beginning construction of these shafts.
5. Preparing and submitting a Drilled Shaft Installation Plan for the Department's acceptance.
6. Constructing the method shaft (test hole) and load test shafts successfully and conducting integrity tests on these shafts.
7. Providing all personnel and equipment to perform a load test program on the load test shafts.
8. Determining the production shaft lengths.
9. Documenting and providing a report that includes all load test shaft data, analysis, and recommendations to the Department.
10. Constructing all drilled shafts to the required tip elevation and socket requirement in accordance with the specifications.
11. Inspecting and documenting the construction of all drilled shafts in accordance with the specifications.
12. Performing Cross-Hole Sonic Logging (CSL) or Thermal Integrity tests on all nonredundant drilled shafts supporting bridges. For redundant drilled shaft bridge foundations and drilled shafts for miscellaneous structures, perform CSL or Thermal Integrity testing on any shaft suspected of containing defects.
13. Repairing all detected defects and conducting post repair integrity testing using 3D tomographic imaging and gamma-gamma density logging.
14. Submitting Foundation Certification Packages in accordance with the specifications.
15. Providing safe access, and cooperating with the Department in verification of the drilled shafts, both during construction and after submittal of the certification package.

**Auger Cast Piles for Sound Barrier Walls**

The Design-Build Firm shall be responsible for the following:

1. Evaluating geotechnical conditions and designing the foundations, including diameter and lengths.
2. Constructing all auger cast piles to the required tip elevation and socket requirements, in accordance with the specifications.
3. Preparing and submitting a Auger Cast Pile Installation Plan for the Department's acceptance.
4. Inspecting and documenting the auger cast pile installation.
5. Submitting Foundation Certification Packages in accordance with the specifications.
6. Providing safe access, and cooperating with the Department in verification of the auger cast piles, both during construction and after submittal of the certification package.

**Specialty Geotechnical Services Requirements**

Specialty geotechnical work is any alternative geotechnical work not covered by Department Specifications and requires the development of a Technical Special Provision (TSP). Any TSP for geotechnical work shall

include the following:

- Criteria of measurable parameters to be met in order to accept the specialty geotechnical work,
- A field testing and instrumentation program to verify design assumptions and performance,
- A quality control program to be performed by the Design-Build Firm that includes sampling and testing to ensure the material quality, products, and installation procedures meet , requirements,
- A verification testing program to be performed by the Geotechnical Foundation Design Engineer of Record (GFDEOR) that includes inspection, sampling, and testing to verify the material, products, and procedures meet requirements. The TSP shall include language providing separate lab samples to be used for the Department's independent verification.
- A certification process

After construction of the specialty geotechnical work, the Design-Build Firm shall submit a certification package for Department's review. The certification package shall include the results of all the field testing, instrumentation and lab testing performed and a signed and sealed letter by the GFDEOR certifying that the specialty geotechnical work meets the requirements. The Department may issue comments and request additional verification testing.

**D. Utility Coordination:**

The Design-Build Firm shall utilize a single dedicated person responsible for managing all utility coordination. This person shall be contractually referred to as the Utility Coordination Manager and shall be identified in the Design-Build Firm's proposal. The Design-Build Firm shall notify the Department in writing of any change in the identity of the Utility Coordination Manager. The Utility Coordination Manager shall have the following knowledge, skills, and abilities:

1. A minimum of 4 years of experience performing utility coordination in accordance with Department standards, policies, and procedures.
2. Knowledge of the Department plans production process and utility coordination practices,
3. Knowledge of Department agreements, standards, policies, and procedures.

The Design-Build Firm's Utility Coordination Manager shall be responsible for managing all utility coordination, including, but not limited to, the following:

1. Ensuring that all utility coordination and activities are conducted in accordance with the requirements of the Contract Documents.
2. Identifying all existing utilities and coordinating any new installations
3. Reviewing proposed utility permit application packages and recommending approval/disapproval of each permit application based on the compatibility of the permit as related to the Design-Build Firm's plans.
4. Scheduling and attending utility meetings, preparing and distributing minutes of all utility meetings, and ensuring expedient follow-up on all unresolved issues.
5. Distributing all plans, conflict matrices and changes to affected Utility Agency/Owners and making sure this information is properly coordinated.
6. Identifying and coordinating the execution and performance under any agreement that is required for any utility work needed with the Design-Build Project.

7. Preparing, reviewing, approving, signing, coordinating the implementation of and submitting to the Department for review, all Utility Agreements. Provide copies to the Department Utility Administrator.
8. Resolving utility conflicts.
9. Obtaining and maintaining all appropriate "*Sunshine State One Call of Florida*" tickets.
10. Performing Constructability Reviews of plans prior to construction activities with regard to the installation, removal, temporary removal, de-energizing, deactivation, relocation, or adjustment of utilities.
11. Providing periodic Project updates to the Department Project Manager and District Utility Office as requested. Copy the Department's Area Utility Manager on all correspondence regarding utilities.
12. Coordination with the Department on any issues that arise concerning reimbursement of utility work costs.

The following Utility Agency/Owners (UA/O's) have been identified by the Department as having facilities within the Project corridor which Department contemplates an adjustment, protection, or relocation is possible. Also provided below is a determination made by the Department as to the eligibility of reimbursement for each UA/O. The UA/O's will be responsible for any necessary relocations for the project. The Department will pay and handle all reimbursable agreements outside of the Design-Build contract if the UA/O is deemed eligible for reimbursement. The Design-Build Firm is responsible for all other coordination and agreements indicated in this document with the exception of reimbursable agreements.

**Summary of UAO having facilities within the Proposed Project Limits**

| UAO | Contact Information | Eligible for Department Reimbursement |
|---|---|---|
| AT&T | Steve Hamer<br>6304 Benjamin Rd., Ste. 501<br>Tampa, FL 33634<br>(813) 888-8300<br>shamer@sdt-1.com | NO |
| AT&T Florida | Stan Wright<br>605 W. Garden St., 2nd Floor<br>Pensacola, FL 32501<br>(850) 436-1488<br>Sw1778@att.com | NO |
| Brighthouse | Ray Lepley<br>240 Hwy. 97 South<br>Cantonment, FL 32533<br>(850) 554-8822<br>Albert.lepley@mybrighthouse.com | NO |

| | | |
|---|---|---|
| Centurylink/Qwest | Cameron Jernigan<br>650 Denton Blvd.<br>Fort Walton Beach, FL 32549<br>(713) 724-4448<br>Cameron.jernigan@centurylink.com | NO |
| Cox Southeast | Troy Young<br>3405 McLemore Dr.<br>Pensacola, FL 32514<br>(850)232-5044<br>Troy.young@cox.com | NO |
| Emerald Coast Utilities Authority | Brandon Knight<br>9255 Sturdevant St.<br>Pensacola, FL 32514<br>(850) 969-6650<br>Brandon.knight@ecua.fl.gov | NO |
| Gulf Power Company | Chad Swails<br>5120 Dogwood Dr.<br>Milton, FL 32570<br>(850) 429-2446<br>ceswails@southernco.com | NO |
| Level 3 Communications | Nickey Worthington<br>1025 Eldorado Blvd.<br>Broomfield, CO 80021<br>(321) 308-0205<br>Nickey.worthington@level3.com | NO |
| Pensacola Energy | Glenn Bailey<br>1625 Atwood Dr.<br>Pensacola, FL 32514<br>(850) 474-5319<br>gbailey@cityofpensacola.com | NO |
| Southern Light, LLC | Andru Bramblett<br>156 St. Anthony St.<br>Mobile, AL 36603<br>(251) 662-1170<br>abramblett@slfiber.com | NO |
| Transcore | Jeff Messer<br>580 East Burgess Road, Ste. B-1<br>Pensacola, FL 32504<br>(404) 952-3943<br>Jeff.messer@transcore.com | NO |
| Verizon | Chuck Brunick<br>812 Ohio Ave.<br>Lynn Haven, FL 32444<br>(850) 265-3652<br>Chuck.brunick@verizonbusiness.com | NO |

The Design-Build Firm may request the utility to be relocated to accommodate changes from the conceptual plans; however, these relocations require the Department's approval and the Department will not pay the Utility Agency/Owner (UA/O) or the Design-Build Firm for the utility relocation work regardless of the UA/O's eligibility for reimbursement.

For a reimbursable utility relocation where the UA/O desires the work to be done by their contractor, the UA/O will perform the work in accordance with the utility work schedule and permit, and bill the Department directly.

DEVIATION FROM THE CONCEPTUAL UTILITY RELOCATION PLAN: If the Design-Build Firm chooses to deviate from the conceptual plans and the scope of the impact to a utility depicted in the Reference Documents section of the RFP, and thereby causes a greater impact to a utility, the Design-Build Firm shall be solely responsible for all increased costs incurred by the utility owner associated with the increase in the scope of the impact to a utility from that depicted in the conceptual plans. The Design-Build Firm shall obtain an agreement from the utility owner being impacted which outlines the changes to the scope of the impact to a utility from that depicted in the conceptual plans. The agreement shall also address the Design-Build Firm's obligation to compensate the utility owner for the additional costs above the costs which would have been incurred without the Design Build Firm's increase in the scope of the impact to a utility from that depicted in the conceptual plans. The Design-Build Firm shall also provide a draft utility permit application acceptable to the Department for the placement of the utility owner's facilities based on the final design. The Department shall not compensate or reimburse the Design-Build Firm for any cost created by a change in scope of the impact to a utility from that depicted in the conceptual plans, or be liable for any time delays caused by a change in scope of the impact to a utility from that depicted in the conceptual plans.

The relocation agreements, plans, work schedules and permit application are to be forwarded to the Department for review by the District Utility Office (DUO) and Department's Project Manager. The DUO and Department's Project Manager will review the documents and are not to sign them. Once reviewed, the utility permit application will be forwarded to the District Maintenance office for the permit to be signed and recorded or submitted through the Online System Permitting (OSP) system.

### E. Roadway Plans:

#### General:

The Design-Build Firm shall prepare the Roadway Plans Package. This work effort includes the roadway design and drainage analysis needed to prepare a complete set of Roadway Plans, Traffic Control Plans, Environmental Permits and other necessary documents.

#### Design Analysis:

The Design-Build Firm shall develop and submit a signed and sealed Typical Section Package, Pavement Design Package (if changed from the minimum pavement design in this RFP) and design documentation for review and concurrence by the Department and FHWA on Federal Aid Oversights Projects.

Any deviation from the Department's design criteria will require a Design Variation and any deviation from AASHTO will require a Design Exception. All such Design Variations and Design Exceptions must be approved.

These packages shall include the following:

1. **Roadway Design:**

See PPM Volume 2; Chapter 2 for Roadway Design sheets, elements and completion level required for each submittal.

2. **Typical Section Package:**

The approved typical section package included in this RFP is the minimum requirements for the contract. If alternate typical sections are proposed, the following submittal requirements should be provided to the Department for review.

- Transmittal letter
- Location Map
- Roadway Typical Section(s)
    1. Pavement Description (Includes milling depth)
    2. Minimum lane, shoulder, median widths
    3. Slopes requirements
    4. Barriers
    5. Right-of-Way
- Data Sheet
- Design Speed

3. **Pavement Design Package:**

The recommended pavement design attached to this document is the minimum required pavement design for the contract. If alternate pavement designs are proposed, the following submittal requirements should be provided to the Department for review.

- Pavement Design
    1. Minimum design period
    2. Minimum ESAL's
    3. Minimum design reliability factors
    4. Resilient modulus for existing and proposed widening (show assumptions)
    5. Roadbed resilient modulus
    6. Minimum structural asphalt thickness
    7. Cross slope
    8. Identify the need for modified binder
    9. Pavement coring and evaluation
    10. Identify if ARMI layer is required
    11. Minimum milling depth

Any proposals for the use of the Mechanistic-Empirical Pavement Design Guide (MEPDG) for pavement design will not be allowed.

4. **Drainage Analysis:**

The Design-Build Firm shall be responsible for designing the drainage and stormwater management systems. All design work shall be in compliance with the Department's Drainage Manual; Florida Administrative Code, chapter 14-86; Federal Aid Policy Guide 23 CFR 650A; and the requirements of the

regulatory agencies. This work will include the engineering analysis necessary to design any or all of the following: cross drains, French drains, roadway ditches, outfall ditches, storm sewers, retention/detention facilities, interchange drainage and water management, other drainage systems and elements of systems as required for a complete analysis. Full coordination with all permitting agencies, the District Environmental Management Office and Drainage Design Engineer will be required from the outset. Full documentation of all meetings and decisions are to be submitted to the District Drainage Engineer, District Environmental Permits Engineer, and the Department's Project Manager. These activities and submittals should be coordinated through the Department's Project Manager.

The exact number of drainage basins, outfalls and water management facilities (retention/detention areas, weirs, etc.) will be the Design-Build Firm's responsibility. The Department has developed preliminary pond designs utilizing the location depicted in the conceptual plans. The Design-Build Firm shall complete the design and permitting for these specific pond locations and the project. The objective is to obtain approved stormwater treatment/attenuation design.

The Design-Build Firm shall provide a drainage map in its hydraulic design documentation. The hydrology should be by regional or local regression equations, or by the rational method. An assumed velocity should not be used.

Perform design and generate construction plans documenting the permitted systems function to criteria.

The Design-Build Firm shall verify that all existing cross drains and storm sewers that are to remain have adequate hydraulic capacity and design life. Flood flow requirements will be determined in accordance with the Department's procedures. If any of these existing cross drains or storm sewers are found to be hydraulically inadequate or found to have insufficient design life, they must be replaced or supplemented in accordance with the drainage requirements of this RFP. If any existing cross drains or storm sewers require repairs but otherwise would have sufficient remaining design life, repairs shall be made in accordance with the requirements of this RFP. These requirements also apply to any proposed extensions of existing drainage pipes and structures.

The Design-Build Firm will consider optional culvert materials in accordance with the Department's Drainage Manual Criteria.

Prior to proceeding with the Drainage Design, the Design-Build Firm shall meet with the District Drainage Engineer and District Environmental Permits Engineer. The purpose of this meeting is to provide information to the Design-Build Firm that will better coordinate the Preliminary and Final Drainage Design efforts. This meeting is Mandatory and is to occur fifteen (15) calendar days (excluding weekends and Department observed holidays) prior to any submittals containing drainage components.

All drainage design for the project must be approved by the District Drainage Engineer.

The Design-Build Firm shall provide the Department's District Drainage Engineer a signed and sealed Drainage Design Report. If modifications to the drainage system are made during construction, an As-Built Plan of all drainage computations, both hydrologic and hydraulic shall be provided. The engineer shall include all necessary support data.

**F. Geometric Design:**

The Design-Build Firm shall prepare the geometric design for the Project using the Design Standards and criteria that are most appropriate with proper consideration given to the design traffic volumes, adjacent land use, design consistency, aesthetics, ADA requirements, and this document.

The design elements shall include, but not be limited to, the horizontal and vertical alignments, lane widths, shoulder widths, median widths, cross slopes, borders, sight distance, side slopes, front slopes and ditches. The geometric design developed by the Design-Build Firm shall be an engineering solution that is not merely an adherence to the minimum AASHTO and/or Department standards.

**G. Design Documentation, Calculations, and Computations:**

The Design-Build Firm shall submit to the Department design documentation, notes, calculations, and computations to document the design conclusions reached during the development of the construction plans.

The design notes and computation sheets shall be fully titled, numbered, dated, indexed, and signed by the designer and the checker. Computer output forms and other oversized sheets shall be folded to a standard size 8½" x 11". At the Project completion, a final set of design notes and computations, signed by the Design-Build Firm, shall be submitted with the As-Built Plans and tracings.

The design documentation, notes, calculations and computations shall include, but not be limited to the following data:

1. Design Standards and criteria used for the Project
2. Geometric design calculations for horizontal alignments
3. Vertical geometry calculations
4. Documentation of decisions reached resulting from meetings, telephone conversations or site visits

**H. Structure Plans:**

1. **Structure Design Analysis:**

a. The Design-Build Firm shall submit to the Department final signed and sealed design documentation prepared during the development of the plans.

b. The Design-Build Firm shall insure that the final geotechnical and hydraulic recommendations and reports required for structure design are submitted with the 90% plans.

c. The Design-Build Firm shall "Load Rate" all bridges in accordance with the Department Procedure 850-010-035 and the Structures Manual. The Bridge Load Rating Calculations, the Completed Bridge Load Rating Summary Detail Sheet, and the Load Rating Summary Form shall be submitted to the Department for review with the 90% superstructure submittal. The final Bridge Load Rating Summary Sheet and Load Rating Summary Form shall be submitted to the Department for review with the Final superstructure submittal. A final, signed and sealed Bridge Load

Rating, updated for as-built conditions, shall be submitted to the Department for each phase of the bridge construction prior to placing traffic on the completed phase of the bridge. A final, signed and sealed Bridge Load Rating, updated for the as-built conditions as part of the As-Built Plans submittal shall be submitted to the Department before any traffic is placed on the bridge. The Bridge Load Rating shall be signed and sealed by a Professional Engineer licensed in the State of Florida.

d. The Design-Build Firm shall evaluate scour on all bridges over water using the procedures described in HEC 18.

e. The Engineer of Record for structures shall analyze the effects of the construction related loads on the permanent structure. These effects include but are not limited to: construction equipment loads, change in segment length, change in construction sequence, etc. The Engineer of Record shall review all specialty engineer submittals (camber curves, falsework systems, etc.) to ensure compliance with the contract plan requirements and intent.

2. **Criteria**

The Design-Build Firm shall incorporate the following into the design of this facility:

a. All plans and designs are to be prepared in accordance with the Governing Regulations of Section V. A.

b. Critical Temporary Retaining Walls: Whenever the construction of a component requires excavation that may endanger the public or an existing structure that is in use the Design-Build Firm must protect the existing facility and the public. If a critical temporary retaining wall is, therefore, required during the construction stage only, it may be removed and reused after completion of the work. Such systems as steel sheet pilings, soldier beams and lagging or other similar systems are commonly used. In such cases, the Design-Build Firm is responsible for designing detailing the wall in the set of contract plans. These plans must be signed and sealed by the Structural Engineer in responsible charge of the wall design.

**I. Specifications:**

Department Specifications may not be modified or revised. Technical Special Provisions shall be written only for items not addressed by Department Specifications, and shall not be used as a means of changing Department Specifications.

The Design-Build Firm shall prepare and submit a signed and sealed Construction Specifications Package for the Project, containing all applicable Division II and III Special Provisions and Supplemental Specifications from the Specifications Workbook in effect at the time the Bid Price Proposals were due in the District Office all Division II and III specifications provided as Attachments to this RFP, and any signed and sealed Technical Special Provisions. Any subsequent modifications to the Construction Specifications Package shall be prepared, signed and sealed as a Supplemental Specifications Package. The Specifications Package shall be prepared, signed and sealed by the Design-Build Firms Engineer of Record who has successfully completed the mandatory Specifications Package Preparations Training.

The website for completing the training is at the following URL address:

http://www2.dot.state.fl.us/SpecificationsEstimates/PackagePreparation/TrainingConsultants.aspx

Specification Workbooks are posted on the Department's website at the following URL address:

https://www2.dot.state.fl.us/SpecificationsPackage/Utilities/Membership/login.aspx?ReturnUrl=%2fspecificationspackage%2fDefault.aspx.

Upon review and approval by the Department, the Construction Specifications Package will be stamped "Released for Construction" and initialed and dated by the Department.

**J. Shop Drawings:**

The Design-Build Firm shall be responsible for the preparation and approval of all Shop Drawings. Shop Drawings shall be in conformance with the Department's Plans Preparation Manual when submitted to the Department and shall bear the stamp and signature of the Design-Build Firm's Engineer of Record (EOR), and Specialty Engineer, as appropriate. The Department shall review the Shop Drawing(s) to evaluate compliance with Project requirements and provide any findings to the Design-Build Firm. The Department's procedural review of shop drawings is to assure that the Design-Build Firm's EOR has approved and signed the drawing, the drawing has been independently reviewed and is in general conformance with the plans. The Department's review is not meant to be a complete and detailed review. Upon review and approval of the shop drawing, the Department will initial, date, and stamp "Released for Construction" or "Released for Construction as Noted".

Shop Drawing submittals must be accompanied by sufficient information for adjoining components or areas of work to allow for proper evaluation of the Shop Drawing(s) submitted for review.

**K. Sequence of Construction**:

The Design-Build Firm shall construct the work in a logical manner and with the following objectives as guides:

1. Maintain or improve, to the maximum extent possible, the quality of existing traffic operations, both in terms of flow rate and safety, throughout the duration of the Project.
2. Minimize the number of different Traffic Control Plan (TCP) phases, i.e., number of different diversions and detours for a given traffic movement.
3. Take advantage of newly constructed portions of the permanent facility as soon as possible when it is in the best interest of traffic operations and construction activity.
4. Maintain reasonable direct access to adjacent properties at all times, with the exception in areas of limited access Right-of-Way where direct access is not permitted.
5. Coordinate with adjacent construction Projects and maintaining agencies.

**L. Stormwater Pollution Prevention Plans (SWPPP):**

The Design-Build Firm shall prepare a Storm Water Pollution Prevention Plan (SWPPP) as required by the National Pollution Discharge Elimination System (NPDES). The Design-Build Firm shall refer to the Department's Project Development and Environment Manual and Florida Department of Environmental

Protection (FDEP) Rule 62-621.300(4)(a) for information in regard to the SWPPP. The SWPPP and the Design-Build Firm's Certification (FDEP Form 62-621.300(4)(b) **NOTICE OF INTENT (NOI) TO USE GENERIC PERMIT FOR STORMWATER DISCHARGE FROM LARGE AND SMALL CONSTRUCTION ACTIVITIES)** shall be submitted for Department review and approval. Department approval must be obtained prior to beginning construction activities.

### M. Temporary Traffic Control Plan:

#### 1. Traffic Control Analysis:

The Design-Build Firm shall design a safe and effective Temporary Traffic Control Plan to move vehicular and pedestrian traffic during all phases of construction. Topics to be addressed shall include, but are not limited to, construction phasing, utility relocation, drainage structures, signalization, ditches, front slopes, back slopes, drop offs within clear zone, and temporary roadway lighting. Special consideration shall be given to the drainage system when developing the construction phases. Positive drainage must be maintained at all times and NOT impact adjacent properties.

The Temporary Traffic Control Plan shall address how to assist with maintenance of traffic throughout the duration of the contract.

The Temporary Traffic Control Plan shall be prepared by a certified designer who has completed the Department's Advanced Maintenance of Traffic training course, and in accordance with the Department's Design Standards and the Plans Preparation Manual.

The Design-Build Firm shall prepare a Transportation Management Plan (TMP) for this project:

A TMP will consist of three components:

(1) Temporary Traffic Control (TTC) plan component;
(2) Transportation Operations (TO) component; and
(3) Public Information (PI) component

Additional information can be found in Volume 1 / Chapter 10 of the PPM.

#### 2. Temporary Traffic Control Plans:

The Design-Build Firm shall utilize Index Series 600 of the Department's Design Standards where applicable. Should these standards be inadequate, a detailed Temporary Traffic Control Plan shall be developed. The Design-Build Firm shall prepare plan sheets, notes, and details to include the following: typical section sheet(s), general notes and construction sequence sheet(s), typical detail sheet(s), traffic control plan sheet(s).

The Design-Build Firm shall prepare additional plan sheets such as detours, cross sections, profiles, drainage structures, temporary roadway lighting, retaining wall details, and sheet piling as necessary for proper construction and implementation of the Temporary Traffic Control Plan.

#### 3. Traffic Control Restrictions:

On SR 10 (US 90A / Nine Mile Road) one lane of traffic in each direction shall remain open at all times. All existing auxiliary lanes shall be maintained at all times to include existing storage lengths. Temporary lane closures will NOT be permitted between 6:00am to 8:00pm. A temporary lane closure shall not last

more than three (3) hours unless approved by the Project Administrator. A lane may only be closed during active work periods. All lane closures, including ramp closures, must be reported to the local emergency agencies, the media and the District Public Information Officer. Also, the Design-Build Firm shall develop the Project to be able to provide for all lanes of traffic to be open in the event of an emergency.

Side roads, business access, and driveways shall remain open at all times. Side roads can NOT be closed unless approval from the District Secretary and any applicable local government is obtained.

A temporary reduction in the posted speed limit will be allowed as necessary for maintenance of traffic. The reduction in speed shall not be reduced lower than 10 mph below the posted speed limit unless approval from the Project Manager is obtained. Temporary regulatory speed signs shall be removed as soon as the conditions requiring the reduced speed no longer exist. Once the work zone regulatory speeds are removed, the regulatory speed existing prior to construction will automatically go back into effect unless new speed limit signing is provided in the plans.

All lanes must be open for traffic within 12 hours of a hurricane evacuation notice and shall remain open for the duration of the event as directed by the Project Administrator.

NO LANE CLOSURES are allowed on the Project during the Special Events days previously listed in this RFP in order to minimize potential impacts to the events.

### N. Environmental Services/Permits/Mitigation:

The Design-Build Firm will be responsible for preparing designs and proposing construction methods that are permittable. The Design-Build Firm will be responsible for any required permit fees. All permits required for a particular construction activity will be acquired prior to commencing the particular construction activity. Delays due to incomplete or erroneous permit application packages, agency rejection, agency denials, agency processing time, or any permit violations, except as provided herein, will be the responsibility of the Design-Build Firm, and will not be considered sufficient reason for a time extension or additional compensation. As the permittee, the Department is responsible for reviewing, approving, signing, and submitting the permit application package including all permit modifications, or subsequent permit applications.

The following Project specific Environmental Services/Permits/Commitments have been identified as specific requirements for this project:

1. Upon 24-hour notice to the Project Engineer by a church or religious assembly located along the project, noisy construction activities in the vicinity of that church or religious assembly shall be suspended for the time period beginning one hour prior to a normally scheduled service or special event, e.g. wedding, funeral, etc., to one hour following completion of said event.
2. The Design-Build Firm shall adhere to the Standard Protection Measures for the Eastern Indigo Snake during construction.
3. The Department has conducted an investigation of the Project site and determined that potential gopher tortoise habitats could be impacted by the Project. All coordination by the Design-Build Firm with the Department regarding gopher tortoises will be completed through DEMO. The Design-Build Firm shall be responsible for the potential gopher tortoise burrow survey that could be impacted by the Project including any areas to be used for construction staging. The Design-Build Firm shall be responsible for conducting the gopher tortoise burrow survey for the purpose of identifying potential gopher tortoise habitats that could be impacted by the Project including any areas to be used for construction staging. The habitat will be

systematically surveyed according to the current Gopher Tortoise Permitting guidelines published by the Florida Fish and Wildlife Conservation Commission (FWC). Surveying and permitting shall be conducted within 6 months prior to construction commencement. The Department must verify the completeness and accuracy of the assessment prior to commencement of any permitting or construction activities. Any areas where the Design-Build Firm proposes to protect burrows to remain on-site with "exclusionary fencing" shall be reviewed and approved by the Department. The Design-Build Firm shall submit an "exclusionary fencing" plan for review prior to any "exclusionary fencing" installation. If there are unavoidable impacts to gopher tortoise burrows, the Design-Build Firm shall be responsible for preparing required documentation for the Department to obtain a FWC permit for the relocation of gopher tortoises and commensals from burrows which cannot be avoided. Preparation of complete permit packages will be the responsibility of the Design-Build Firm. As the "permittee", the Department is responsible for reviewing and approving the permit application package including all permit modifications, or subsequent permit applications. This applies whether the project is Federal or state funded. Once the Department has approved the permit application, the Design-Build Firm is responsible for submitting the permit application to FWC. A copy of the permit and any subsequent reports to FWC must be provided to DEMO. If FWC rejects or denies the permit application, it is the Design-Build Firm's responsibility to make whatever changes necessary to ensure the permit application is approved. Once the permit is obtained, the Design-Build Firm shall notify the Department at least one week prior to the relocation of gopher tortoises. If gopher tortoise relocations are phased throughout the construction, the Design-Build Firm shall notify the Department at least one week prior to each relocation phase. The Department will provide oversight of the relocations and ensure permit compliance. The Design-Build Firm shall be responsible for any necessary permit extensions or re-permitting in order to keep the relocation permit valid throughout the construction period. The Design-Build Firm shall provide the Department with draft copies of requests to modify the permits and/or requests for permit extensions, for review and approval by the Department prior to submittal to the Agencies. The Design-Build Firm shall provide the appropriate reports as required by the permit conditions, including closing out the permit. The Design-Build Firm shall note that permits for gopher tortoise relocation for areas outside of the Department owned Right-of-Way (i.e. utility easements; license agreements) cannot be obtained with the Department as the "permittee", per FWC requirements. Should permits in areas outside of the Right-of-Way be required, the Department will still perform the oversight of the process as described above. The Design-Build Firm will be required to pay all permit fees including any and all fees associated with the relocation of gopher tortoises. Any fines levied by permitting agencies shall be the responsibility of the Design-Build Firm.

4. The Florida black bear is known to exist within the project area. It is protected under F.A.C. 68A-4.009. The FWC June 2012 Black Bear Management Plan requirements will be implemented on this project.
5. One specimen of the spoon-leaved sundew (Drosera intermedia) was found east of the tributary of Eleven Mile Creek within the existing Department right-of-way (latitude 30.535683, longitude -87.374008). No other state or federally-listed plant species were observed. If the spoon-leaved sundew occurs within the construction footprint, the Design-Build Firm shall notify DEMO and DEMO will coordinate with the appropriate agencies to allow relocation in accordance with statute 581.185. If plants occur within the Department's right-of-way, but outside of the construction footprint, the plant area will be labeled on the plans as "no storage and staging allowed".

6. The Design-Build Firm shall locate any necessary equipment storage and staging areas outside of wetlands and in previously disturbed or cleared areas during the design phase. Areas identified as storage and staging areas will be surveyed prior to construction for listed species.
7. The Design-Build Firm shall provide sufficient upland edge for wildlife to cross under the bridge at Eleven Mile Creek. The addition of an earthen shelf is expected to maintain habitat connectivity for animal passage under the bridge.
8. The Design-Build Firm shall coordinate with the District Contamination Impact Coordinator to properly identify contaminated sites in the design plans.
9. Per a letter from the United States Coast Guard (USCG) dated December 10, 2013, Eleven Mile Creek is a non-navigable waterway. The proposed bridge over Eleven Mile Creek will provide adequate clearances to accommodate occasional recreational boating. A set of As-built plans shall be sent to the USCG once construction is complete.

**O. Signing and Pavement Marking Plans:**

The Design-Build Firm shall prepare signing and pavement marking plans in accordance with Department criteria. Final pavement markings shall be thermoplastic. Neither audible and vibratory pavement markings nor rumble striping are required for this contract.

All existing signs shall be removed and new signs designed and installed within the project limits. It shall be the Design-Build Firm's responsibility to field inventory and show all existing signs within the Project limits and address all regulatory, warning and signage along the Project.

**P. Lighting Plans:**

If existing lighting is impacted within the project limits, the Design-Build Firm will be required to design and construct new lighting to mitigate for the impacts. This shall include, but not be limited to providing a lighting design and a lighting analysis, and preparing lighting plans in accordance with Department criteria.

The Design-Build Firm shall develop and submit for approval, a Load Center/Circuit/Pole Number identification plan that is compatible with the adjacent lighting systems maintenance identification scheme.

Where existing roadway lighting circuit sources (services, load centers, etc.) are being removed, the Design-Build Firm shall either:

1. Provide a new load center per current codes and all applicable criteria.
2. Identify an existing load center capable of feeding the proposed lighting while meeting all current codes and all applicable criteria.

All modified load centers shall comply with all applicable criteria and shall be in like new condition.

Existing light poles, luminaire arms, luminaires, and load centers identified for removal shall be coordinated with the Department as to whether these features will become the property of Design-Build Firm or salvaged, transported, and delivered to the Department for future use.

The Design-Build Firm shall perform detailed field reviews. Review and document all lighting (poles/luminaires, sign luminaires, etc.), circuiting, load centers, service points, utility transformers, etc., within the scope of work. This review includes: conductors, conduit, grounding, enclosures, voltages, mounting heights, pullboxes, etc. This review also includes circuits outside the scope of work that originate or touch this Project's scope of work.

All deficiencies within the Project scope shall be identified and corrected. Any deficiencies outside the Project scope shall be brought to the attention of the Department.

After the field reviews are completed, all damaged and/or non-functioning equipment shall be documented and forwarded to the Department prior to the start of construction. All damaged and/or non-functioning equipment within the scope of work are required to be replaced or repaired to meet all applicable criteria and shall be in like-new condition.

Where new electrical services are required, the Design-Build Firm shall coordinate final locations of distribution transformer and service pole to minimize service and branch circuit conductors and conduit lengths. Each service point shall be separately metered.

The Design-Build Firm shall comply with the requirements of each jurisdictional authority within the Project limits. Compliance with the jurisdictional authority includes but is not limited to: field reviews, technical meetings, special deliverable, etc. It is the Design-Build Firm's responsibility to verify and comply with all jurisdictional authority's requirements.

### Q. Signalization Plans:

#### 1. General

The Design-Build Firm shall prepare Signalization Plans in accordance with Department criteria. In addition, the Design-Build Firm shall incorporate all aspects of the District 3 Signalization General Notes that can be obtained from the District Design Office.

The design shall be submitted to the Department for review early in the signalization design process, as the approved design may affect eventual mast arm placement and structural design.

The design will provide for signalized pedestrian crossings at all signalized intersections.

The permanent traffic signals shall be oriented horizontally and supported by mast arms with underground electrical power service. The mast arm layout design shall provide for far-side signal head indications (as opposed to near-side indications), and may dictate installation of refuge islands in which to install mast arms to meet stop bar-to-signal head spacing criteria. Mast arm length shall be sufficient to provide for protected-only signal heads in the future if protected-permissive operation is deployed initially as part of the permanent design. Overhead street name signs shall be provided for all approaches.

The traffic control cabinet, associated peripheral equipment, and electrical power service assembly shall be strategically located in a protected area not vulnerable to damage by vehicular impact. The controller cabinet shall be of sufficient size to afford 30% usable free space when populated with all required equipment. The signal installation shall be equipped with an uninterruptible power supply capable of providing 30-minutes of normal stop-and-go operation.

Temporary signal(s) shall be installed at the Design-Build Firm's discretion or as directed by the Department anytime during the course of the project.

Detection at existing, temporary, or new signals shall be established and maintained by the Design-Build Firm throughout the duration of the project with no lapse in operation of the detection greater than 48-

hours. Temporary detection shall be accomplished by use of video, microwave, or conventional loops at the Design-Build Firm's discretion.

Permanent detection design regardless of technology utilized shall provide for advance vehicular detection on the main street through movements upstream of the stop bar of at least 330', and shall provide presence detection zones of at least 50' at all other stop bar locations.

Timing and phasing plans shall be developed and maintained by the Design-Build Firm for maintenance of traffic throughout the duration of the project in consideration of prevailing traffic conditions. It is anticipated that multiple timing plans will need to operate on a time-of-day basis to accommodate differing traffic conditions during AM peak, PM peak, off-peak, night time, and weekend periods. In addition to interim timing plans developed and maintained during the construction operation, the Design-Build Firm shall establish a permanent set of timing plans, time-of-day settings, and day-of-week settings that are to remain in the traffic signal equipment at the conclusion of the construction project. The permanent timings discussed above are to be summarized and documented in a signed and sealed report.

All existing signalization equipment and materials removed from the project, including mast arms, shall become property of the Design-Build Firm.

**2. Design and Engineering Services:**

The Design-Build Firm shall be responsible for all Signalization design and engineering services relating to the Project.

**3. Construction and Integration Services:**

The Design-Build Firm shall be responsible for all Signalization construction and integration services relating to the Project.

**4. Testing and Acceptance:**

All equipment furnished by the Design-Build Firm shall be subject to monitoring and testing to determine conformance with all applicable requirements. The Design-Build Firm is responsible for the coordination and performance of material inspection and testing, field acceptance tests, and system acceptance tests. The times and dates of tests must be accepted in writing by the Department's Project Manager. The Design-Build Firm shall conduct all tests in the presence of the Department's Project Manager or designated representative.

**R. Landscape Opportunity Plans:**

It is the intent of this work item to preserve the opportunity to provide for significant landscape planting areas within the Project limits that meet the intent of FDOT Highway Beautification Policy. The landscape opportunity design shall adhere to the FDOT Highway Beautification Policy with the intent of creating a unified landscape theme for the project.

The Design-Build Firm shall provide the necessary site inventory and site analysis and shall prepare a "Landscape Opportunity Plan" (Opportunity Plan) as part of the roadway plan set. The Landscape Opportunity Plan shall consider the Design-Build Firm's proposed roadway improvements, utilities, setbacks and clear zone dimensions, community commitments and other Project needs in identifying future

landscape planting areas. Landscape opportunity areas should be preserved in accordance with the Department's "Bold" initiative.

The Opportunity Plans shall include the following:

1. Proposed improvements and existing elements to remain as associated with the Project.
2. Vegetation disposition depicting existing plant material to be removed, relocated or to remain.
3. Wetland jurisdictional lines.
4. Proposed drainage retention areas and easements.
5. Proposed utilities and existing utilities to remain.
6. Graphically depicted on-site and off-site desired or objectionable views.
7. Locations of landscape opportunity planting areas in a bubble format which identifies various vegetation groupings in a hatched or colorized manner. Examples are: "trees/palms/shrubs", "shrubs only", "buffer plantings", etc.
8. Provided and labeled applicable clear zone, horizontal clearance, setback dimensions on the plans and in chart form which reflect AASHTO, FDOT and Department guidelines for landscape installation and maintenance operations, including those that have been coordinated with other disciplines
9. Identified outdoor advertising locations, owners and contacts and shown 1000 ft. view zone.
10. Indicated potential area(s) for wildflower plantings.

The Opportunity Plan shall match the scale and format used for the proposed roadway sheets. Should this format not convey design intent that is clearly legible, an alternate format may be considered.

Landscape construction documents and landscape installation are not included in this contract and shall be provided by others.

Disciplines that will have greatest impact to preserving landscape opportunities include environmental, drainage, utilities, signing, lighting and ITS. The DBLA shall identify potential conflicts relating to preserving opportunity landscape areas and provide suggested resolutions to preserve them. If conflicts cannot be resolved by the Design-Build Firm and the DBLA, they shall be discussed with the Department's Project Manager and District Landscape Architect for coordination and resolution.

The DBLA shall research and confirm any legally permitted outdoor advertising billboard (ODA) within 1,000-feet of the Project limits. The ODA sign(s) and 1,000-feet maximum vegetation protection zone limit shall be indicated on the plans. The Design-Build Firm's Landscape Architect shall provide a copy of all correspondence and attachments to the Department's District Landscape Architect.

The DBLA shall conduct a visual survey of existing vegetation within and adjacent to the Right-of-Way of the project. General locations of existing vegetation that will remain after roadway and associated improvements are completed shall be shown with notations of general plant species in each location on the Opportunity Plan. DBLA shall identify proposed buffer areas as needed.

The DBLA shall meet with the District Landscape Architect prior to the beginning of work for the purposes of coordination and to discuss adherence to the Highway Beautification Policy. No proposed planting areas indicated on the Opportunity Plan can occur in: federal and/or state jurisdictional wetlands or other surface waters; within open water bodies; in the bottom of stormwater management facilities; or use obligate wetlands or facultative wetland species within 25 feet of the seasonal high water of wetlands or other surface waters. Limited plantings may occur on the slopes and bottom of stormwater management facilities once coordinated with the District EMO office, District Drainage Engineer and the District Landscape Architect. Trees may not be planted within 5 feet of storm sewer pipes and utilities.

## VII. Technical Proposal Requirements:

### A. General:

Each Design-Build Firm being considered for this Project is required to submit a Technical Proposal. The proposal shall include sufficient information to enable the Department to evaluate the capability of the Design-Build Firm to provide the desired services. The data shall be significant to the Project and shall be innovative, when appropriate, and practical.

### B. Submittal Requirements:

The Technical Proposal shall be bound with the information, paper size and page limitation requirements as listed herein.

A copy of the written Technical Proposal must also be submitted in .pdf format including bookmarks for each section on a CD, DVD, or Flash Drive. Bookmarks which provide links to content within the Technical Proposal are allowed. Bookmarks which provide links directing to information not included within the content of the Technical Proposal shall not be utilized. No macros will be allowed. Minimum font size of ten (10) shall be used. Times New Roman shall be the required font type. For the hard copies, the Technical Proposal can be submitted in separate volumes and the volume cover shall clearly identify documents included in the specific volume.

Only upon request by the Department, provide calculations, studies and/or research to support features identified in the Technical Proposal. This only applies during the Technical Proposal Evaluation phase.

Submit one (1) original, one (1) CD's, DVD's or Flash Drives containing the Technical Proposal in .pdf format and four (4) collated, complete sets of hard copies of the Technical Proposal to:

Richard Norris
FDOT D3 Professional Services Administrator
1074 Highway 90
Chipley, Florida 32428

The minimum information to be included:

Section 1: Project Approach

- Paper size: 8½" x 11". The maximum number of pages shall be **15** single-sided, typed pages including text, graphics, tables, charts, and photographs.

Double-sided 8½" x 11" sheets will be counted as 2 pages. 11" x 17 " sheets are prohibited in this section.

- Describe how the proposed design solutions and construction means and methods meet the project needs described in this Request for Proposal. Provide sufficient information to convey a thorough knowledge and understanding of the project and to provide confidence the design and construction can be completed as proposed.
- Provide the term, measureable standards, and remedial work plan for any proposed Value Added features that are not Value Added features included in this RFP, or for extending the Value Added period of a feature that is included in this RFP. Describe any material requirements that are exceeded.
- Provide a Written Schedule Narrative that describes the Design and Construction phases and illustrates how each phase will be scheduled to meet the Project needs required of this Request for Proposal. Bar or Gantt charts are prohibited. Do not reveal or describe the Proposed Contract Time. Proposed Contract Time will be evaluated when Bid Price Proposals are received.
- Provide the name of the Utility Coordination Manager

Section 2: Plans and Technical Special Provisions

- Plan and Profile views of the proposed improvements shall be submitted in roll-plot format. The maximum width of the roll-plots shall be 36”. The maximum length of the roll-plot shall be 6’. No more than 5 roll-plots may be submitted.

  Inclusion of additional information on the roll-plot, other than depictions of the Plan and Profile views, is allowed provided it clarifies the plan and profile views. However, the Department may determine that such additional information is excessive and may require the Design-Build Firm to revise and resubmit the roll-plots. If this occurs, the Design-Build Firm will have 2 business days to revise and resubmit the roll-plots upon notification by the Department. All other information not included on the roll plots, such as typical sections, special emphasis details, structure plans, etc., shall be provided on 11”x17” sheets.
- Provide noise wall details that include consideration for minimizing impact to the overhead electric line (construction and utility access for maintainability).
- Provide profile view of vertical profile adjustments at the SR 8 (I-10) interchange.
- Provide Landscape Opportunity Plan sheets that depict a Bold Landscape design for the entire project limits. The Landscape Plan shall include graphic plant symbols that show the plant location, plant type, plant quantity, plant botanical and common name and installed plant size. Paper size shall be 11”x17”.
- Right-of-Way Maps and Legal Descriptions (including area in square feet) of any proposed additional Right-of-Way parcels if applicable and approved through the ATC process. Provide Technical Proposal Plans in accordance

with the requirements of the Plans Preparation Manual, except as modified herein.

- The Plans shall complement the Project Approach.
- Provide any Technical Special Provisions which apply to the proposed work. Paper Size: 8½" x 11".

### C. Evaluation Criteria:

The Department shall evaluate the written Technical Proposal by each Design-Build Firm. The Design-Build Firm should not discuss or reveal elements of the price proposal in the written proposals. A technical score for each Design-Build Firm will be based on the following criteria:

| Item | Value |
|---|---|
| 1. Design | 30 |
| 2. Construction | 30 |
| 3. Innovation | 10 |
| 4. Value Added | 10 |
| **Maximum Score** | **80** |

The following is a description of each of the above referenced items:

1. **Design (30 points)**

Credit will be given for the quality and suitability of the following elements:

- Structures design
- Roadway design / and safety
- Drainage design
- Environmental Design
- Design coordination plan minimizing design changes
- Geotechnical investigation plan
- Geotechnical load test program
- Minimizing impacts through design to:
    - Environment
    - Public
    - Adjacent Properties
    - Structures
- Traffic Control Plan design
- Utility Coordination and minimization of impacts
- Design considerations which improve recycling and reuse opportunities

Credit will be given for drainage designs that address temporary drainage needs and proper consideration avoidance of downstream impacts to adjacent property owners.

Credit will be given for maintenance of traffic considerations that address the potential development of businesses along the project that will result in increased vehicular traffic throughout the life of the construction project.

Credit will be given for design and utility coordination efforts that minimize the potential for adverse impacts and project delays due to utility involvement.

Credit will be given for development of design approaches which minimize periodic and routine maintenance. The following elements should be considered: access to provide adequate inspections and maintenance, access to structure, and impacts to long term maintenance costs.

Credit will be given for plan to ensure technical proposal commitments are addressed in final design.

2. **Construction (30 points)**

Credit will be given for the quality and suitability of the following elements:

- Safety
- Structures construction
- Roadway construction
- Drainage construction
- Construction coordination plan minimizing construction changes
- Minimizing impacts through construction to:
    - Environment
    - Public
    - Adjacent Properties
    - Structures
- Implementation of the Environmental design and Erosion/Sediment Control Plan
- Implementation of the Maintenance of Traffic Plan
- Implementation of the Incident Management Plan
- Utility Coordination and Construction

Credit will be given for developing and deploying construction techniques that enhance project durability, reduce long term and routine maintenance, and those techniques which enhance public and worker safety. This shall include, but not be limited to, minimization of lane and driveway closures, lane widths, visual obstructions, construction sequencing, and drastic reductions in speed limits.

Credit will be given for insuring all environmental commitments are honored.

Credit will be given for construction and utility coordination efforts that minimize the potential for adverse impacts and project delays due to utility conflicts.

Credit will be given for plan to ensure technical proposal commitments are addressed during construction.

3. **Innovation (10 points)**

Credit will be given for introducing and implementing innovative design approaches and construction techniques which address the following elements:

- Minimize or eliminate Utility relocations
- Materials
- Workmanship
- Enhance Design and Construction aspects related to future expansion of the transportation facility

4. **Value Added (10 points)**

Credit will be given for the following Value Added features:

- Broadening the extent of the Value Added features of this RFP while maintaining existing threshold requirements
- Exceeding minimum material requirements to enhance durability of project components
- Providing additional Value Added project features proposed by the Design-Build Firm

The following Value Added features have been identified by the Department as a requirement for this project. The Design-Build Firm may propose to broaden the extent of these Value Added features.

| Value Added Feature | Minimum Value Added Period |
|---|---|
| Value Added Asphalt | 3 years |
| Value Added Concrete Pavement | 5 years |
| Value Added Bridge Components | 5 years |

**D. Final Selection Formula:**

The Department shall publicly open the sealed bid proposals and calculate an adjusted score using the

$$\left[\left(\frac{TS}{TS1} X\, 0.15\right) + \left(\frac{ABPP1}{ABPP} X\, 0.70\right) + \left(\frac{PCT1}{PCT} X\, 0.15\right)\right] \text{X } 100 = \text{AS}$$

AS = Adjusted Score
BPP = Bid Price Proposal
BPP1 = Lowest Responsive Bid Price Proposal
TVC = Time Value Costs ($15,000 per day)
PCT = Proposed Contract Time
PCT1 = Lowest Responsive Proposed Contract Time
TS = Technical Score (Combination of Letter of Interest Score and Technical Proposal Score)
TS1= Highest Responsive Technical Score (Combination of Letter of Interest Score and Technical Proposal Score)
ABPP1 = Adjusted Lowest Responsive Bid Price Proposal = BPP1 + (TVC * $PCT_{BPP1}$)
ABPP = Adjusted Bid Price Proposal = BPP + (TVC * PCT)
$PCT_{BPP1}$ = Proposed Contract Time of Lowest Responsive Bid Price Proposal
*All numbers will be calculated to three decimal places.

The Design-Build Firm selected will be the Design-Build Firm whose adjusted score is highest.

The Department reserves the right to consider any proposal as non-responsive if any part of the Technical Proposal does not meet established codes and criteria. If the Proposed Contract Time is greater than Maximum Contract Time of 680 calendar days the Bid Price Proposal will be considered non-responsive.

### E. Final Selection Process:

After the sealed bids are received, the Department will have a public meeting for the announcement of the Technical Scores and opening of sealed Bid Price Proposals. This meeting will be recorded. At this meeting, the Department will announce the score for each member of the Technical Review Committee, by category, for each Proposer and each Proposer's Technical Score. Following announcement of the Technical Scores, the sealed Bid Price Proposals will be opened and the adjusted scores calculated. The Selection Committee should meet a minimum of two (2) calendar days (excluding weekends and Department observed holidays) after the public opening of the Technical Scores and Bid Price Proposals. The Department's Selection Committee will review the evaluation of the Technical Review Committee and the Bid Price Proposal of each Proposer as to the apparent highest adjusted score and make a final determination of the highest adjusted score. The Selection Committee has the right to correct any errors in the evaluation and selection process that may have been made. The Department is not obligated to award the contract and the Selection Committee may decide to reject all proposals. If the Selection Committee decides not to reject all proposals, the contract will be awarded to the Proposer determined by the Selection Committee to have the highest adjusted score.

### F. Stipend Awards:

The Department has elected to pay a stipend to a limited number of non-selected Short-Listed Design-Build Firms to offset some of the costs of preparing the Proposals. The non-selected Short-Listed Design-Build Firms meeting the stipend eligibility requirements of the Project Advertisement and complying with the requirements contained in this section will ultimately be compensated. The stipend will only be payable under the terms and conditions of the Design-Build Stipend Agreement and Project Advertisement, copies of which are included with this Request for Proposal. This Request for Proposal does not commit the Department or any other public agency to pay any costs incurred by an individual firm, partnership, or corporation in the submission of Proposals except as set forth in the Design-Build Stipend Agreement. The amount of the stipend will be $60,000 per non-selected Short-Listed Design-Build Firm that meets the stipend eligibility requirements contained in the Project Advertisement. The stipend is not intended to compensate any non-selected Short-Listed Design-Build Firm for the total cost of preparing the Technical and Price Proposals. The Department reserves the right, upon payment of stipend, to use any of the concepts or ideas within the Technical Proposals, as the Department deems appropriate.

In order for a Short-Listed Design-Build Firm to remain eligible for a stipend, the Short-Listed Design-Build Firm must fully execute with original signatures and have delivered to the Department within one (1) week after the Short-List protest period, one (1) original of the Design-Build Stipend Agreement, Form No. 700-011-14. The Short-Listed Design-Build Firm shall reproduce the necessary copies. Terms of said agreement are non-negotiable. A fully executed copy of the Design-Build Stipend Agreement will be returned to the Short-Listed Design-Build Firm.

A non-selected Short-Listed Design-Build Firm eligible for stipend compensation must submit an invoice for a lump sum payment of services after the selection/award process is complete. The invoice should include a statement similar to the following: "All work necessary to prepare Technical Proposal and Price Proposals in response to the Department's RFP for the subject Project".

## VIII. Bid Proposal Requirements.

### A. Bid Price Proposal:

Bid Price Proposals shall be submitted on the Bid Blank form attached hereto and shall include one lump sum price for the Project and the number of calendar days within which the Proposer will complete the

Project. The lump sum price shall include all costs for all design, geotechnical surveys, architectural services, engineering services, Design-Build Firms quality plan, construction of the Project, and all other work necessary to fully and timely complete that portion of the Project in accordance with the Contract Documents, as well as all job site and home office overhead, and profit, it being understood that payment of that amount for that portion of the Project will be full, complete, and final compensation for the work required to complete that portion of the Project. One (1) hard copy Bid Price Proposal shall be hand delivered in a separate sealed package to the following:

Richard Norris
FDOT D3 Professional Services Administrator
1074 Highway 90
Chipley, Florida 32428

The package shall indicate clearly that it is the Bid Price Proposal and shall identify clearly the Proposer's name, and Project description. The Bid Price Proposal shall be secured and unopened until the date specified for opening of Bid Price Proposals.

Forms to be included with the Price Proposal:

- Design Build Bid Blank Form
- Design Build Bid Proposal Form
- Design Build Proposal Of (Proposer) Form
- Design Build Bid or Proposal Bond
- Vendor Certification Regarding Scrutinized Companies List