**FLORIDA DEPARTMENT OF TRANSPORTATION**

# STRUCTURES DESIGN GUIDELINES

**FDOT STRUCTURES MANUAL**
**VOLUME 1**
**JANUARY 2017**

# Table of Contents

**Table of Contents . . . . . i**
**Introduction . . . . . I-1**
I.1 General . . . . . I-1
I.2 Format . . . . . I-1
I.3 Cross References (Rev. 01/17) . . . . . I-1
Table I.3-1 Cross Reference between AASHTO LRFD & SDG . . . . . I-2
Table I.3-2 Cross Reference between AASHTO LRFD-MHBD& SDG . . . . . I-5
**1 General Requirements . . . . . 1-1**
1.1 General . . . . . 1-1
1.1.1 Design Review . . . . . 1-1
1.1.2 Substructure and Superstructure Definitions . . . . . 1-1
1.1.3 Clearances (Rev. 01/17) . . . . . 1-1
Figure 1.1.3-1 Vertical Clearance Schematic for Prestressed Beams/Girders . 1-2
1.1.4 Bridge Height Classifications . . . . . 1-2
1.1.5 Buy America Provisions . . . . . 1-2
1.1.6 ADA on Bridges . . . . . 1-2
1.1.7 Design Life . . . . . 1-3
1.1.8 Welding of Aluminum Pedestrian/Bicycle Railings . . . . . 1-3
1.2 Deflection and Span-to-Depth Ratios [2.5.2.6] (Rev. 01/17) . . . . . 1-3
1.3 Environmental Classifications . . . . . 1-3
1.3.1 General . . . . . 1-3
1.3.2 Classification Criteria . . . . . 1-4
Table 1.3.2-1 Criteria for Substructure Environmental Classifications . . . . . 1-5
1.3.3 Chloride Content . . . . . 1-6
Table 1.3.3-1 Chloride Intrusion Rate/Environmental Classification . . . . . 1-7
Figure 1.3.3-1 Flow Chart for Environmental Classification of Structures . . . . 1-7
1.4 Concrete and Environment [5.12.1] . . . . . 1-7
1.4.1 General (Rev. 01/17) . . . . . 1-7
1.4.2 Concrete Cover (Rev. 01/17) . . . . . 1-8
Figure 1.4.2-1 End Bent (All Environments) . . . . . 1-9
Figure 1.4.2-2 Piers (All Environments) (1 of 3) . . . . . 1-9
Figure 1.4.2-3 Piers (All Environments) (2 of 3) . . . . . 1-10
Figure 1.4.2-4 Piers (All Environments) (3 of 3) . . . . . 1-10
Figure 1.4.2-5 Pier Cap and Intermediate Bent (All Environments) . . . . . 1-11
Figure 1.4.2-6 Cast-in-Place Deck / Beam Supported Superstructure (All environments) . . . . . 1-11
Table 1.4.2-1 Concrete Cover . . . . . 1-12

1.4.3 Class and Admixtures . . . . . 1-13
Table 1.4.3-1 Structural Concrete Class Requirements . . . . . 1-13
Table 1.4.3-2 Concrete Classes and Strengths. . . . . 1-14
1.4.4 Mass Concrete . . . . . 1-15
Figure 1.4.4-1 Mass Concrete for Pier and Expansion Joint Segments . . . . . 1-16
1.4.5 Concrete Surface Finishes . . . . . 1-17
1.5 Existing Hazardous Material . . . . . 1-18
1.6 Post-Installed Anchor Systems . . . . . 1-19
1.6.1 General . . . . . 1-19
1.6.2 Adhesive-Bonded Anchors and Dowels Systems (Rev. 01/17). . . . . 1-19
Figure 1.6.2-1 Effective Tensile Stress Areas of Adhesive Anchors . . . . . 1-25
Figure 1.6.2-2 Effective Shear Stress Areas of Adhesive Anchors . . . . . 1-25
1.6.3 Undercut Anchor Systems (Rev. 01/17) . . . . . 1-26
1.7 Load Rating. . . . . 1-26
1.8 Post-Design Services . . . . . 1-27
1.9 Miscellaneous Attachments to Bridges (Rev. 01/17). . . . . 1-28
Figure 1.9-1 Special Details for Attaching Miscellaneous Items to Traffic Railings . . . . . 1-29
1.10 Limitations on Bridge Skew Angle. . . . . 1-30
1.11 Post-Tensioning [5] . . . . . 1-30
1.11.1 General (Rev. 01/17) . . . . . 1-30
Table 1.11.1-1 Minimum Clearance Requirements at Anchorages for Replaceable Strand and Wire Tendons. . . . . 1-31
Figure 1.11.1-1 Jack Dimensions for Design and Detailing . . . . . 1-32
Table 1.11.1-2 Jack Dimensions for Design and Detailing . . . . . 1-32
1.11.2 Corrosion Protection (Rev. 01/17) . . . . . 1-34
1.11.3 Design Values (Rev. 01/17). . . . . 1-35
1.11.4 Ducts (Rev. 01/17). . . . . 1-36
Table 1.11.4-1 Maximum Duct External Dimensions for Detailing . . . . . 1-37
Table 1.11.4-2 Minimum Duct Radius and Tangent Length . . . . . 1-38
Figure 1.11.4-1 Minimum Duct Radius and Tangent Length Adjacent to Anchorages. . . . . 1-38
Figure 1.11.4-2 Layout of Internal Tendons with Segmental Duct Couplers . . 1-39
1.11.5 Tendon Design (Rev. 01/17) . . . . . 1-40
Figure 1.11.5-1 Support Hinge Locations . . . . . 1-41
1.11.6 Integrated Drawings . . . . . 1-41
1.11.7 Erection Schedule and Construction Sequence (Rev. 01/17) . . . . . 1-42
1.12 Fire Suppression Systems . . . . . 1-42

**2 Loads and Load Factors . . . . . 2-1**
2.1 General . . . . . 2-1
2.1.1 Load Factors and Load Combinations [3.4.1] . . . . . 2-1
2.1.2 Live Loads [3.6] . . . . . 2-1
2.2 Dead Loads (Rev. 01/17) . . . . . 2-1
Table 2.2-1 Miscellaneous Dead Loads . . . . . 2-2
2.3 Seismic Provisions [3.10.9][3.10.9.2][4.7.4] . . . . . 2-4
2.3.1 General . . . . . 2-4
2.3.2 Seismic Design for Widenings . . . . . 2-4
2.3.3 Lateral Restraint . . . . . 2-4
2.4 Wind Loads (Rev. 01/17) . . . . . 2-5
2.4.1 Wind Loads on Completed Structures: WL and WS [3.8] . . . . . 2-5
Table 2.4.1-1 Design Wind Speed, V . . . . . 2-5
2.4.2 Wind Loads on Other Structures . . . . . 2-6
2.4.3 Wind Loads During Construction [3.4.2] . . . . . 2-6
Table 2.4.3-1 Load Factors and Design Wind Speed During Construction . . . 2-6
Table 2.4.3-2 Drag Coefficient During Construction . . . . . 2-7
Table 2.4.3-3 Drag Coefficient During Construction:
Single Brace or Cross-Frame Design . . . . . 2-8
2.5 Wave Loads . . . . . 2-8
2.6 Vehicular Collision Force [3.6.5] . . . . . 2-10
2.6.1 General . . . . . 2-10
2.6.2 End Bents and Retaining Walls (Rev. 01/17) . . . . . 2-11
2.6.3 New Structures Over or Adjacent to Roadways . . . . . 2-11
2.6.4 Roadway Work Beneath or Adjacent to Existing Structures . . . . . 2-11
2.6.5 Widening of Existing Structures Over or Adjacent to Roadways . . . . . 2-12
2.6.6 Bridge Superstructures Adjacent to Piers of Other Bridges . . . . . 2-13
2.6.7 Structures Over or Adjacent to Railroad and Light Rail Tracks . . . . . 2-13
2.6.8 Design and Analysis Methods . . . . . 2-14
2.7 Force Effects due to Superimposed Deformations [3.12] . . . . . 2-15
2.7.1 Uniform Temperature . . . . . 2-15
Table 2.7.1-1 Temperature Range by Superstructure Material . . . . . 2-15
2.7.2 Temperature Gradient [3.12.3] . . . . . 2-15
2.8 Barriers and Railings [4.6.2.2] . . . . . 2-16
2.8.1 Distribution for Beam-Slab Bridges . . . . . 2-16
2.8.2 Limit State Checks [2.5.2.6][3.4.1][4.6.3] (Rev. 01/17) . . . . . 2-16
2.9 Live Load Distribution Factors [4.6.2.2][4.6.3.1] . . . . . 2-16
2.10 Redundancy and Operational Importance [1.3.4 and 1.3.5] . . . . . 2-17

2.11 Vessel Collision [3.14] . . . . . 2-19
2.11.1 General [3.14.1] . . . . . 2-19
2.11.2 Research and Information Assembly . . . . . 2-19
2.11.3 Design Vessel [3.14.4][3.14.5.3] . . . . . 2-20
2.11.4 Design Methodology - Damage Permitted [3.14.13] . . . . . 2-21
2.11.5 Widenings . . . . . 2-22
2.11.6 Movable Bridges . . . . . 2-22
2.11.7 Channel Span Unit . . . . . 2-22
2.11.8 Scour with Vessel Collision [3.14.1] . . . . . 2-22
2.11.9 Application of Impact Forces [3.14.14] . . . . . 2-23
Figure 2.11.9-1 Application of Longitudinal Vessel Impact Force on Long Footings . . . . . 2-23
2.11.10 Impact Forces on Superstructure [3.14.14.2] . . . . . 2-24
2.12 Substructure Limit States . . . . . 2-24
2.12.1 Strength and Service (always required) . . . . . 2-24
2.12.2 Extreme Event (if required) . . . . . 2-24
2.13 Construction Loads . . . . . 2-25
2.13.1 Constructability Limit State Checks . . . . . 2-25
2.13.2 Substructures for Segmental Bridges . . . . . 2-25
**3 Substructure and Retaining, Noise and Perimeter Walls . . . . . 3-1**
3.1 General (Rev. 01/17) . . . . . 3-1
Table 3.1-1 Usage Limitations and Corrosion Mitigation Measures for Steel Piles and Wall Anchor Bars . . . . . 3-3
3.2 Geotechnical Report . . . . . 3-4
3.3 Foundation Scour Design [2.6] . . . . . 3-5
3.4 Lateral Load [10.7.3.12][10.8.3.8] . . . . . 3-6
3.5 Piles . . . . . 3-7
3.5.1 Prestressed Concrete Piles [5.13.4.4] (Rev. 01/17) . . . . . 3-7
Table 3.5.1-1 Concrete Pile Size and Material Requirements . . . . . 3-8
3.5.2 Concrete Cylinder Piles . . . . . 3-9
3.5.3 Steel Sheet Piles . . . . . 3-9
3.5.4 Minimum Pile Spacing and Clearances [10.7.1.2] . . . . . 3-11
3.5.5 Downdrag [10.7.1.6.2] . . . . . 3-11
3.5.6 Resistance Factors [10.5.5] (Rev. 01/17) . . . . . 3-12
Table 3.5.6-1 Resistance Factors for Piles (all structures) . . . . . 3-12
3.5.7 Battered Piles [10.7.1.4] . . . . . 3-13
3.5.8 Minimum Tip Elevation [10.7.6] . . . . . 3-13
3.5.9 Anticipated Pile Lengths [10.7.3.3] . . . . . 3-14

3.5.10 Test Piles [10.7.9] . . . . . 3-14
3.5.11 Load Tests [10.7.3.8][10.8.3.5.6]. . . . . 3-15
3.5.12 Pile Driving Resistance [10.7.3.8.6]. . . . . 3-16
Table 3.5.12-1 Maximum Pile Driving Resistance . . . . . 3-17
3.5.13 Pile Jetting and Preforming . . . . . 3-18
3.5.14 Pile Data Table (Rev. 01/17) . . . . . 3-18
3.5.15 Plan Notes. . . . . 3-18
3.5.16 Fender Piles . . . . . 3-19
3.5.17 Concrete Piling Spliced with Steel Devices. . . . . 3-19
3.6 Drilled Shaft Foundations . . . . . 3-19
3.6.1 Minimum Sizes (Rev. 01/17) . . . . . 3-19
3.6.2 Downdrag . . . . . 3-19
3.6.3 Resistance Factors [10.5.5]. . . . . 3-20
Table 3.6.3-1 Resistance Factors for Drilled Shafts (Bridge Foundations) . . . 3-20
3.6.4 Minimum Tip Elevation [10.8.1.5] . . . . . 3-21
3.6.5 Load Tests. . . . . 3-21
3.6.6 Drilled Shaft Data Table . . . . . 3-21
3.6.7 Plan Notes. . . . . 3-22
3.6.8 Construction Joints . . . . . 3-23
3.6.9 Nonredundant Drilled Shaft Bridge Foundations. . . . . 3-23
3.6.10 Minimum Reinforcement Spacing [5.13.4.5.2, 10.8.3.9.3]. . . . . 3-24
3.6.11 Axial Resistance of Drilled Shafts [5.7.4.4] . . . . . 3-24
3.7 Cofferdams and Seals. . . . . 3-25
Table 3.7-1 Cofferdam Design Values. . . . . 3-25
3.8 Spread Footings [10.5.5][10.5.6]. . . . . 3-25
3.9 Mass Concrete . . . . . 3-25
3.10 Crack Control (Rev. 01/17) . . . . . 3-26
3.11 Pier, Cap, Column, and Footing Design . . . . . 3-26
3.11.1 General (Rev. 01/17) . . . . . 3-26
Table 3.11.1-1 Minimum Number of Tendons for Post-Tensioned Substructure Elements . . . . . 3-27
Table 3.11.1-2 Minimum Center-to-Center Duct Spacing . . . . . 3-28
Figure 3.11.1-1 Section Through Post-Tensioned Pier/Beam Caps Showing Duct Spacings. . . . . 3-29
Figure 3.11.1-2 Section Through Post-Tensioned Columns Showing Duct Spacings . . . . . 3-29
Table 3.11.1-3 Minimum Dimensions for Substructure Elements Containing Post-Tensioning Tendons . . . . . 3-30
3.11.2 Footing Design . . . . . 3-30
Figure 3.11.2-1 Minimum Footing Depth on Sloped Embankments . . . . . 3-31

3.11.3 Column Design . . . . . 3-31
3.11.4 Cap Design (Rev. 01/17) . . . . . 3-32
Figure 3.11.4-1 Inverted-T Pier Cap Detail . . . . . 3-32
3.11.5 Rigidly Framed Concrete Straddle Piers . . . . . 3-33
3.12 Retaining Wall Types (Rev. 01/17) . . . . . 3-33
Figure 3.12-1 Partial Height MSE Retaining Wall Types . . . . . 3-33
3.12.1 Mechanically Stabilized Earth (MSE) Walls (Rev. 01/17) . . . . . 3-36
3.12.2 Steel Sheet Pile Walls . . . . . 3-37
3.12.3 Concrete Sheet Piles . . . . . 3-37
3.12.4 Soil Nails . . . . . 3-37
3.12.5 Soldier Pile/Panel Walls . . . . . 3-38
3.12.6 Modular Block Walls (Rev. 01/17) . . . . . 3-38
3.12.7 Geosynthetic Reinforced Soil (GRS) Walls and Abutments . . . . . 3-38
3.13 Retaining Wall Design . . . . . 3-39
3.13.1 General . . . . . 3-39
3.13.2 Mechanically Stabilized Earth Walls [11.10] (Rev. 01/17) . . . . . 3-40
Figure 3.13.2-1 Design Criteria for Acute Corners of MSE Bin Walls . . . . . 3-41
Figure 3.13.2-2 MSE Wall Minimum Front Face Embedment . . . . . 3-42
Figure 3.13.2-3 Broken Backfill with Traffic Surcharge . . . . . 3-44
Figure 3.13.2-4 Broken Backfill without Traffic Surcharge . . . . . 3-45
Figure 3.13.2-5 Proprietary Retaining Walls . . . . . 3-46
Figure 3.13.2-6 Back-to-Back MSE Walls . . . . . 3-50
Figure 3.13.2-7 Horizontal Earth Pressure on Taller Back-to-Back MSE Wall . 3-51
Figure 3.13.2-8 Horizontal Earth Pressure on Stacked Back-to-Back MSE Walls . . . . . 3-52
3.13.3 Permanent and Critical Temporary Sheet Pile Walls . . . . . 3-52
3.13.4 GRS Walls and Abutments . . . . . 3-53
3.14 Fender Systems . . . . . 3-54
3.14.1 General . . . . . 3-54
3.14.2 EOR's Design Procedure (Rev. 01/17) . . . . . 3-55
Table 3.14.2-1 Table of Past Points and associated Minimum Energies . . . . 3-56
3.14.3 Contractor's Design Procedure (Rev. 01/17) . . . . . 3-58
3.15 Concrete Box and Three-Sided Culvert Design . . . . . 3-62
3.15.1 General . . . . . 3-62
3.15.2 Design Method . . . . . 3-62
3.15.3 Load Modifiers and Load Factors [3.4.1] [12.5.4] . . . . . 3-62
3.15.4 Dead Loads and Earth Pressure [3.5] [3.11.5] [3.11.7] . . . . . 3-62
3.15.5 Live Load . . . . . 3-63
3.15.6 Wall Thickness Requirements (Rev. 01/17) . . . . . 3-63

3.15.7 Concrete Strength and Class . . . . . 3-63
3.15.8 Reinforcement . . . . . 3-64
3.15.9 Reinforcement Details . . . . . 3-64
3.15.10 Skewed Culverts . . . . . 3-65
3.15.11 Deflection Limitations [2.5.2.6.2] . . . . . 3-65
3.15.12 Analysis and Foundation Boundary Conditions . . . . . 3-65
3.15.13 Span-to-Rise Ratios . . . . . 3-66
3.15.14 Load Rating Requirements . . . . . 3-66
3.16 Noise Wall Design . . . . . 3-66
3.16.1 Scope [15.1] . . . . . 3-66
3.16.2 General Features - Panel Height [15.4] and Post Spacing . . . . . 3-67
3.16.3 General Features - Concrete Strength and Class [15.4] . . . . . 3-67
3.16.4 Wind Loads [3.8.1][15.8.2] (Rev. 01/17) . . . . . 3-67
3.16.5 Vehicular Collision Forces [15.8.4] . . . . . 3-67
3.16.6 Foundation Design [15.9] . . . . . 3-68
3.16.7 Lateral Earth Pressures [3.11.5.10] . . . . . 3-68
3.17 Concrete Drainage Structures . . . . . 3-68
3.17.1 General . . . . . 3-68
3.17.2 Design Method . . . . . 3-68
3.17.3 Load Modifiers and Load Factors [3.4.1] [12.5.4] . . . . . 3-68
3.17.4 Dead Loads and Earth Pressure [3.5] [3.11.5] [3.11.7] . . . . . 3-69
3.17.5 Live Load . . . . . 3-69
3.17.6 Hydrostatic Loading . . . . . 3-69
3.17.7 Wall Thickness Requirements . . . . . 3-70
3.17.8 Slab Thickness Requirements . . . . . 3-70
3.17.9 Concrete Strength and Class . . . . . 3-70
3.17.10 Reinforcement . . . . . 3-71
3.17.11 Structural Fiber Reinforcement . . . . . 3-71
3.17.12 Deflection Limitations [2.5.2.6.2] . . . . . 3-72
3.17.13 Analysis and Boundary Conditions . . . . . 3-73
3.18 Perimeter Wall Design . . . . . 3-74
3.18.1 Scope [15.1] . . . . . 3-74
3.18.2 General Features - Panel Height [15.4] and Post Spacing . . . . . 3-74
3.18.3 General Features - Concrete Strength and Class [15.4] . . . . . 3-74
3.18.4 Wind Loads [3.8.1][15.8.2] (Rev. 01/17) . . . . . 3-75
3.18.5 Vehicular Collision Forces [15.8.4] . . . . . 3-75
3.18.6 Foundation Design [15.9] . . . . . 3-75
3.18.7 Lateral Earth Pressures [3.11.5.10] . . . . . 3-75
3.19 Connections Between Precast Elements . . . . . 3-75

**4 Superstructure - Concrete . . . . . 4-1**
4.1 General . . . . . 4-1
4.1.1 Concrete Cover . . . . . 4-1
4.1.2 Reinforcing Steel [5.4.3] . . . . . 4-1
4.1.3 Girder Transportation . . . . . 4-1
4.1.4 Shear Design [5.8.3] (Rev. 01/17) . . . . . 4-1
Figure 4.1.4-1 Shear Reinforcement Layout in Beam Members . . . . . 4-2
4.1.5 Minimum Reinforcement Requirements [5.7.3.3.2] . . . . . 4-3
4.1.6 Dapped Beam Ends . . . . . 4-3
4.1.7 Continuity of Precast Beams . . . . . 4-3
4.1.8 Crack Control (Rev. 01/17) . . . . . 4-4
4.1.9 Expansion Joints . . . . . 4-5
4.2 Decks [5.13.1][9.7] . . . . . 4-5
4.2.1 Bridge Length Definitions . . . . . 4-5
4.2.2 Deck Thickness Determination . . . . . 4-5
4.2.3 Grooving and Planing . . . . . 4-6
4.2.4 Deck Design - General [5.10.8][6.10.1.7][9.7.2][9.7.3] . . . . . 4-6
Table 4.2.4-1 Deck Concrete Strength Gain Values . . . . . 4-8
4.2.5 Decks Supporting Traffic Railings (Rev. 01/17) . . . . . 4-8
Table 4.2.5-1 Minimum Transverse Reinforcing Required for Decks Supporting Traffic Railings . . . . . 4-9
Table 4.2.5-2 Values for Designing Reinforcing Steel for Decks Supporting Traffic Railings . . . . . 4-11
4.2.6 Decks on Simple Span Concrete Beam Superstructures . . . . . 4-12
Figure 4.2.6-1 Schematic Plan View of Supplemental Longitudinal Bar Placement for Simple Span Concrete Beam Superstructures . 4-13
4.2.7 Decks on Continuous Concrete Beam/Girder Superstructures . . . . . 4-14
4.2.8 Decks on Simple Span and Continuous Steel Beam/Girder Superstructures . . . . . 4-15
Figure 4.2.8-1 Schematic Plan View of Supplemental Longitudinal Bar Placement on Steel Superstructures . . . . . 4-16
4.2.9 Skewed Decks [9.7.1.3] . . . . . 4-17
4.2.10 Stay-in-Place Forms (Rev. 01/17) . . . . . 4-17
4.2.11 Phase Constructed Decks . . . . . 4-18
4.2.12 Drip Grooves (Rev. 01/17) . . . . . 4-18
Figure 4.2.12-1 Drip Groove Details . . . . . 4-19
4.2.13 Decks on Perpendicularly Oriented Beams and Girders . . . . . 4-19
4.3 Pretensioned Beams . . . . . 4-19
4.3.1 General (Rev. 01/17) . . . . . 4-19
Table 4.3.1-1 Minimum Top Flange Longitudinal Reinforcing in Beam Ends . 4-21

4.3.2 Beam Camber/Build-Up over Beams . . . . . 4-23
4.3.3 Minimum Web Thickness [5.14.1.2.2] . . . . . 4-24
4.3.4 I-Beam Stability (Rev. 01/17). . . . . 4-24
4.4 Flat Slab Superstructures [5.14.4]. . . . . 4-26
4.4.1 General (Rev. 01/17) . . . . . 4-26
4.4.2 C.I.P. Flat Slab Superstructures . . . . . 4-27
4.4.3 Precast Flat Slab Superstructures (Rev. 01/17) . . . . . 4-27
4.5 Post-Tensioning, General [5.14.2] . . . . . 4-28
4.5.1 Minimum Dimensions (Rev. 01/17) . . . . . 4-29
Table 4.5.1-1 Minimum Dimensions for Superstructure Elements Containing Post-Tensioning Tendons . . . . . 4-29
4.5.2 Minimum Number of Tendons (Rev. 01/17). . . . . 4-30
Table 4.5.2-1 Minimum Number of Tendons Required for Post-Tensioned Superstructure Elements. . . . . 4-30
4.5.3 Duct Spacing (Rev. 01/17). . . . . 4-31
Table 4.5.3-1 Minimum Center-to-Center Duct Spacing . . . . . 4-31
Figure 4.5.3-1 Section Through Segmental Box Girder Showing Duct Spacings . . . . . 4-32
Figure 4.5.3-2 Section Through Post-Tensioned I-Girder Showing Duct Spacings . . . . . 4-33
Figure 4.5.3-3 Section Through Slab or Multi-Cell Box Girder Bridge Showing Duct Spacings. . . . . 4-33
4.5.4 Principal Tensile Stresses [5.8.5] [5.9.4.2.2] [5.14.2.3.3] . . . . . 4-34
4.5.5 Expansion Joints . . . . . 4-34
4.6 Segmental Box Girders . . . . . 4-34
4.6.1 Maximum Web Spacing for Precast Segmental Box Girders . . . . . 4-35
Figure 4.6.1-1 Maximum Web Spacing for Precast Box Girders . . . . . 4-35
4.6.2 Access and Maintenance (Rev. 01/17) . . . . . 4-35
4.6.3 Tendons (Rev. 01/17) . . . . . 4-38
Figure 4.6.3-1 Internal Tendon Layout Schematics for Precast Segmental Box Girders . . . . . 4-39
Figure 4.6.3-2 Cantilever Tendon Layout Schematic for Cast-In-Place Box Girders . . . . . 4-40
Table 4.6.3-1 Minimum Number, Size and Anchorage Location of External Top Slab Tendons Across Mid Span Closure Pours. . . . . 4-41
Figure 4.6.3-3 External Top Slab Continuity Tendon Layout versus Web Spacing at Mid Span Closure Pours . . . . . 4-41
4.6.4 Anchorage, Blister and Deviator Details (Rev. 01/17) . . . . . 4-42
Figure 4.6.4-1 Deviator Diaphragm Detail . . . . . 4-42
Figure 4.6.4-2 Inside Corner Detail at Pier Segments . . . . . 4-43

4.6.5 Design Requirements for Cantilever Bridges with Fixed Pier Tables . . . . 4-43
Figure 4.6.5-1 Elevation and Detail - Typical Cantilever Concrete Segmental Box with Fixed Pier Tables . . . . . 4-43
4.6.6 Creep and Shrinkage [5.14.2.3.6] . . . . . 4-44
4.6.7 Expansion Joints (Rev. 01/17). . . . . 4-44
Figure 4.6.7-1 Details at Expansion Joints . . . . . 4-45
4.6.8 Construction Data Elevation and Camber Curve for Box Girders . . . . . 4-45
4.6.9 Transverse Deck Loading, Analysis & Design. . . . . 4-46
4.6.10 Span-by-Span Segmental Diaphragm Details. . . . . 4-46
4.6.11 Analytical Methods for the Load Rating of Post-tensioned Box Girder Bridges . . . . . 4-46
4.7 Pretensioned/Post-Tensioned I-Beams (Rev. 01/17) . . . . . 4-47
4.8 Pretensioned/Post-Tensioned U-Girders (Rev. 01/17) . . . . . 4-47
4.8.1 General . . . . . 4-48
4.8.2 Access and Maintenance . . . . . 4-49
4.8.3 Initial Prestressing . . . . . 4-51
4.8.4 Post-Tensioning. . . . . 4-51
4.8.5 Transverse Concrete Deck Analysis . . . . . 4-51
4.8.6 Principal Stresses in Spliced U-Girder Webs . . . . . 4-52
4.9 Approach Slabs. . . . . 4-52
Figure 4.9-1 Approach Slab Geometry Schematic . . . . . 4-52
**5 Superstructure - Steel . . . . . 5-1**
5.1 General (Rev. 01/17). . . . . 5-1
5.1.1 Corrosion Prevention. . . . . 5-1
5.1.2 Girder Transportation . . . . . 5-1
5.1.3 Dapped Girder Ends . . . . . 5-2
5.1.4 Decks. . . . . 5-2
5.1.5 Expansion Joints . . . . . 5-2
5.2 Dead Load Camber [6.7.2] . . . . . 5-2
5.3 Structural Steel [6.4.1]. . . . . 5-3
5.3.1 General . . . . . 5-3
5.3.2 Testing (Rev. 01/17) . . . . . 5-3
5.4 Bolts [6.4.3.1] (Rev. 01/17) . . . . . 5-4
5.5 Minimum Steel Dimensions [6.7.3] . . . . . 5-4
Table 5.5-1 Thickness Increments for Common Steel Plates . . . . . 5-5
5.6 Box Sections . . . . . 5-5
5.6.1 General . . . . . 5-5
5.6.2 Access and Maintenance . . . . . 5-5

5.6.3 Cross Frames [6.7.4] . . . . . 5-7
5.6.4 Lateral Bracing [6.7.5] . . . . . 5-8
5.6.5 Transverse Concrete Deck Analysis . . . . . 5-8
5.7 Diaphragms and Cross Frames for I-Girders [6.7.4] . . . . . 5-8
5.8 Transverse Intermediate Stiffeners [6.10.11.1] . . . . . 5-8
5.9 Bearing Stiffeners [6.10.11.2] . . . . . 5-9
5.10 Longitudinal Stiffeners [6.10.11.3] . . . . . 5-9
5.11 Connections and Splices [6.13] . . . . . 5-9
5.11.1 Slip Resistance [6.13.2.8] . . . . . 5-10
5.11.2 Welded Connections [6.13.3] . . . . . 5-10
5.11.3 Welded Splices [6.13.6.2] . . . . . 5-11
5.12 Corrosion Protection . . . . . 5-11
5.12.1 Environmental Testing for Site Specific Corrosion Issues . . . . . 5-12
5.12.2 Galvanizing (Rev. 01/17) . . . . . 5-13
5.13 Global Displacement Amplification in Narrow I-Girder Bridge Units . . . . . 5-13
**6 Superstructure Components . . . . . 6-1**
6.1 General . . . . . 6-1
6.2 Curbs and Medians [13.11] . . . . . 6-1
6.3 Temperature Movement [3.12.2] . . . . . 6-1
6.4 Expansion Joints . . . . . 6-1
Table 6.4-1 Expansion Joint Width Limitations by Joint Type . . . . . 6-1
6.4.1 General Design Provisions [14.5.1] (Rev. 01/17) . . . . . 6-1
6.4.2 Movement [14.4] [14.5.3] . . . . . 6-2
6.4.3 Expansion Joints for Bridge Widenings . . . . . 6-2
6.4.4 Bridge Widenings - Group 1 Expansion Joints . . . . . 6-3
6.4.5 Bridge Widenings - Group 2 Expansion Joints . . . . . 6-4
6.4.6 Post Tensioned Bridges . . . . . 6-4
6.5 Bearings (Rev. 01/17) . . . . . 6-4
6.5.1 Design (Rev. 01/17) . . . . . 6-5
6.5.2 Maintainability . . . . . 6-7
6.5.3 Lateral Restraint . . . . . 6-7
6.6 Deck Drainage [2.6.6] . . . . . 6-8
6.7 Traffic Railing [13.7] . . . . . 6-8
6.7.1 General (Rev. 01/17) . . . . . 6-8
6.7.2 Non-Standard or New Railing Designs . . . . . 6-10
6.7.3 FHWA Policy (Rev. 01/17) . . . . . 6-13
6.7.4 Existing Obsolete Traffic Railings (Rev. 01/17) . . . . . 6-13
6.7.5 Historic Bridges . . . . . 6-19

6.7.6 Requirements for Test Levels 5 and 6 [13.7.2] . . . . . 6-20
6.7.7 Design Variation . . . . . 6-20
6.7.8 Miscellaneous Attachments to Traffic Railings . . . . . 6-21
6.7.9 Impact Loads for Railing Systems with Footings or on Retaining Walls [13.7.3.1.2] (Rev. 01/17) . . . . . 6-21
Figure 6.7.9-1 Traffic Railing-Moment Slab System (Sliding and Overturning) . 6-22
6.8 Pedestrian and Bicycle Railings [13.8 and 13.9]. . . . . 6-23
6.8.1 General . . . . . 6-23
6.8.2 Geometry (Rev. 01/17) . . . . . 6-23
6.8.3 Design Live Loads. . . . . 6-24
6.8.4 Deflection. . . . . 6-24
6.9 Bridges with Sidewalks or Traffic Separators . . . . . 6-24
6.10 Erection Scheme and Beam/Girder Stability. . . . . 6-25
**7 Widening and Rehabilitation . . . . . 7-1**
7.1 General . . . . . 7-1
7.1.1 Load Rating . . . . . 7-1
Figure 7.1.1-1 Widening / Rehabilitation Load Rating Flow Chart. . . . . 7-2
7.1.2 Bridge Deck. . . . . 7-3
7.1.3 Expansion Joints . . . . . 7-3
7.1.4 Traffic Railing. . . . . 7-3
7.1.5 Approach Slabs . . . . . 7-3
7.1.6 Footings (Rev. 01/17) . . . . . 7-3
7.2 Classifications and Definitions . . . . . 7-4
7.2.1 Major Widening . . . . . 7-4
7.2.2 Minor Widening . . . . . 7-4
7.3 Analysis and Design . . . . . 7-4
7.3.1 Aesthetics . . . . . 7-4
7.3.2 Materials . . . . . 7-4
7.3.3 Load Distribution . . . . . 7-4
7.3.4 Design Specifications . . . . . 7-5
7.3.5 Overlays . . . . . 7-5
7.3.6 Substructure . . . . . 7-5
7.3.7 Other Special Considerations (Rev. 01/17) . . . . . 7-5
7.4 Attachment to Existing Structure. . . . . 7-6
7.4.1 Drilling . . . . . 7-6
7.4.2 Dowel Embedments . . . . . 7-6
7.4.3 Surface Preparation. . . . . 7-6

7.4.4 Connection Details (Rev. 01/17) . . . . . 7-7
Figure 7.4.4-1 Flat Slab Widening . . . . . 7-8
Figure 7.4.4-2 Monolithic Beam and Deck Widening. . . . . 7-9
Figure 7.4.4-3 AASHTO Beam Superstructure Widening . . . . . 7-9
Figure 7.4.4-4 Dowel Installation . . . . . 7-10
7.5 Construction Sequence. . . . . 7-10
7.6 Widening Rules . . . . . 7-10
7.7 Deck Grooving (Rev. 01/17) . . . . . 7-13
**8 Movable Bridges . . . . . 8-1**
8.1 General . . . . . 8-1
8.1.1 Applicability . . . . . 8-1
8.1.2 Redundancy . . . . . 8-2
8.1.3 Trunnion Support Systems for New Bridges . . . . . 8-3
8.1.4 Vertical Clearance Requirements . . . . . 8-4
8.1.5 Horizontal Clearance Requirements . . . . . 8-4
8.1.6 Bridge Operator Parking . . . . . 8-4
8.1.7 Definitions and Terms . . . . . 8-5
8.1.8 Movable Bridge Terminology. . . . . 8-5
Figure 8.1.8-1: Movable Bridge Terminology. . . . . 8-6
8.1.9 Movable Bridge Traffic Signals and Safety Gates [LRFD-MHBD 1.4.4] . . 8-6
8.1.10 Functional Checkout . . . . . 8-7
8.1.11 Functional Checkout Tests . . . . . 8-7
8.2 Maintainability . . . . . 8-12
8.2.1 General . . . . . 8-12
8.2.2 Trunnion Bearings . . . . . 8-12
8.2.3 Leaf-Jacking of New Bridges. . . . . 8-12
8.2.4 Trunnion Alignment Features . . . . . 8-13
8.2.5 Lock Systems . . . . . 8-13
8.2.6 Machinery Drive Systems . . . . . 8-14
8.2.7 Lubrication Provisions . . . . . 8-14
8.2.8 Drive System Bushings . . . . . 8-14
8.2.9 Local Switching . . . . . 8-14
8.2.10 Service Accessibility . . . . . 8-14
8.2.11 Service Lighting and Receptacles . . . . . 8-15
8.2.12 Communications . . . . . 8-15
8.2.13 Diagnostic Reference Guide for Maintenance. . . . . 8-15
8.2.14 Working Conditions for Improved Maintainability . . . . . 8-15
8.2.15 Weatherproofing . . . . . 8-15

8.3 Construction Specifications and Design Calculations . . . . . 8-16
8.4 Double Leaf Bascule Bridges . . . . . 8-16
8.5 Speed Control for Leaf-driving Systems [LRFD-MHBD 5.4] . . . . . 8-17
Figure 8.5-1: Speed Ramp . . . . . 8-17
8.5.1 Mechanical Drive Systems [LRFD-MHBD 5.4] . . . . . 8-17
8.5.2 Hydraulic Drive Systems [LRFD-MHBD 7] . . . . . 8-18
8.6 Mechanical Systems . . . . . 8-18
8.6.1 Trunnions and Trunnion Bearings [LRFD-MHBD 6.8.1.3] . . . . . 8-18
Figure 8.6.1-1: Trunnion Hubs . . . . . 8-19
8.6.2 Racks and Girders [LRFD-MHBD 6.8.1.2] . . . . . 8-20
8.6.3 Leaf Balance [LRFD-MHBD 1.5] . . . . . 8-20
8.6.4 Main Drive Gearboxes [LRFD-MHBD 6.7.6] . . . . . 8-21
8.6.5 Open Gearing [LRFD-MHBD 6.7.5] . . . . . 8-22
8.6.6 Span Locks [LRFD-MHBD 6.8.1.5.1] . . . . . 8-22
Figure 8.6.6-1: Lock Design Criteria . . . . . 8-23
8.6.7 Brakes [LRFD-MHBD 5.6 and 6.7.13] . . . . . 8-24
8.6.8 Couplings [LRFD-MHBD 6.7.9.3] . . . . . 8-24
8.6.9 Clutches . . . . . 8-24
8.6.10 Bearings (Sleeve and Anti-Friction) [LRFD-MHBD 6.7.7] . . . . . 8-24
8.6.11 Anchors [LRFD-MHBD 6.4.1.4] . . . . . 8-25
8.6.12 Fasteners [LRFD-MHBD 6.7.15] (Rev. 01/17) . . . . . 8-27
8.7 Hydraulic Systems for Rehabilitations [LRFD-MHBD 7] . . . . . 8-27
8.7.1 Hydraulic Pumps [LRFD-MHBD 7.5.5] . . . . . 8-28
8.7.2 Cylinders . . . . . 8-28
8.7.3 Control Components [LRFD-MHBD 7.5.6] . . . . . 8-29
8.7.4 Hydraulic Lines [LRFD-MHBD 7.9.1] . . . . . 8-29
8.7.5 Miscellaneous Hydraulic Components . . . . . 8-29
8.8 Electrical Systems [LRFD-MHBD 8] . . . . . 8-30
8.8.1 Electrical Service [LRFD-MHBD 8.3] . . . . . 8-30
8.8.2 Conductors [LRFD-MHBD 8.9] . . . . . 8-30
8.8.3 Grounding and Lightning Protection [LRFD-MHBD 8.12 and 8.13] . . . . . 8-31
8.8.4 Conduits [LRFD-MHBD 8.10] . . . . . 8-31
8.8.5 Service Lights [LRFD-MHBD 8.11] . . . . . 8-32
8.8.6 Motor Controls [LRFD-MHBD 8.6] . . . . . 8-32
8.8.7 Alternating Current Motors [LRFD-MHBD 8.5] . . . . . 8-32
8.8.8 Electrical Control [LRFD-MHBD 8.4] . . . . . 8-33
8.8.9 Programmable Logic Controllers [LRFD-MHBD 8.4.2.3] . . . . . 8-34
8.8.10 Limit and Seating Switches [LRFD-MHBD 8.4.4] . . . . . 8-34

8.8.11 Safety Interlocking [LRFD-MHBD 8.4.1] . . . . . 8-35
8.8.12 Instruments [LRFD-MHBD 8.4.5]. . . . . 8-36
8.8.13 Control Console [LRFD-MHBD 8.4.6] . . . . . 8-36
8.8.14 Communications Systems . . . . . 8-36
8.8.15 Navigation Lights [LRFD-MHBD 1.4.4.6.2] . . . . . 8-37
8.8.16 Electrical Connections between Fixed and Moving Parts [LRFD-MHBD 8.9.5] . . . . . 8-37
8.8.17 Electrical Connections across the Navigable Channel [LRFD-MHBD 8.9.7] . . . . . 8-37
8.8.18 Engine Generators [LRFD-MHBD 8.3.9] . . . . . 8-37
8.8.19 Automatic Transfer Switch [LRFD-MHBD 8.3.8] . . . . . 8-38
8.8.20 Video Equipment . . . . . 8-38
8.9 Control House . . . . . 8-39
8.9.1 General . . . . . 8-39
8.9.2 Floor Tile . . . . . 8-40
8.9.3 Epoxy Flooring. . . . . 8-40
8.9.4 Roof. . . . . 8-40
8.9.5 Windows . . . . . 8-41
8.9.6 Doors and Hardware . . . . . 8-42
8.9.7 Pipe and Fittings . . . . . 8-42
8.9.8 Site Water Lines . . . . . 8-42
8.9.9 Site Sanitary Sewage System . . . . . 8-43
8.9.10 Toilet and Bath Accessories . . . . . 8-43
8.9.11 Plumbing Fixtures . . . . . 8-43
8.9.12 Heating, Ventilating and Air Conditioning . . . . . 8-43
8.9.13 Interior Luminaires. . . . . 8-44
8.9.14 Stairs, Steps and Ladders . . . . . 8-44
8.9.15 Handrails, Guards, Railing and Grating. . . . . 8-45
8.9.16 Framing and Sheathing . . . . . 8-46
8.9.17 Desktop and Cabinet. . . . . 8-46
8.9.18 Insulation . . . . . 8-46
8.9.19 Fire-Stopping. . . . . 8-46
8.9.20 Veneer Plaster (Interior Walls) . . . . . 8-47
8.9.21 Gypsum Board (Interior Walls) . . . . . 8-47
8.9.22 Painting . . . . . 8-47
8.9.23 Wall Louvers . . . . . 8-47
8.9.24 Equipment and Appliances . . . . . 8-47
8.9.25 Furnishings . . . . . 8-47
8.9.26 Fire and Security Alarm System . . . . . 8-47

**9 BDR Cost Estimating . . . . . 9-1**
9.1 General . . . . . 9-1
9.2 BDR Bridge Cost Estimating . . . . . 9-2
9.2.1 Substructure (Rev. 01/17) . . . . . 9-2
9.2.2 Superstructure (Rev. 01/17) . . . . . 9-4
9.2.3 Design Aid for Determination of Reinforcing Steel . . . . . 9-7
9.3 Historical Bridge Costs . . . . . 9-9
9.3.1 Deck/Girder Bridges . . . . . 9-9
9.3.2 Post - tensioned Concrete Box Girder, Segmental Bridges . . . . . 9-11
9.3.3 Post-tensioned Cast-in-place Concrete Box Girder Bridge (low level overpass) . . . . . 9-12
9.3.4 Bascule Bridge Cost . . . . . 9-12
9.3.5 Cast-In-Place Flat Slab . . . . . 9-13
9.4 Bridge Debris Quantity Estimation (Rev. 01/17) . . . . . 9-14
**10 Pedestrian Bridges . . . . . 10-1**
10.1 General . . . . . 10-1
10.2 Referenced Standards . . . . . 10-1
10.3 Designer Qualifications . . . . . 10-1
10.4 Design . . . . . 10-1
10.5 Loading (Rev. 01/17) . . . . . 10-3
10.6 Materials . . . . . 10-3
10.7 Steel Connections . . . . . 10-3
10.8 Charpy V-Notch Testing . . . . . 10-4
10.9 Cable-Stayed Pedestrian Bridges . . . . . 10-5
10.10 Painting/Galvanizing . . . . . 10-5
10.11 Erection . . . . . 10-5
10.12 Railings/Enclosures . . . . . 10-6
10.13 Drainage . . . . . 10-6
10.14 Corrosion Resistant Details . . . . . 10-6
10.15 Lighting / Attachments . . . . . 10-6
10.16 Maintenance and Inspection Attachments . . . . . 10-7
10.17 Permit Structures . . . . . 10-7
**11 Temporary Works . . . . . 11-1**
11.1 General . . . . . 11-1
11.2 Welds . . . . . 11-1
11.3 Adhesive Bonded Anchors . . . . . 11-1
11.4 Falsework Founded on Shallow Foundations . . . . . 11-1
11.5 Bridge Deck Overhang Falsework for Steel I-Girders . . . . . 11-2

11.6 Prestressed I-Beam Temporary Bracing Design . . . . . 11-2
11.6.1 General . . . . . 11-2
11.6.2 Beam Stability . . . . . 11-2
11.6.3 Temporary Bracing Member Design (Rev. 01/17) . . . . . 11-2
Figure 11.6-1 Recommended Structural Analysis Models for Determining X-brace and K-brace Forces . . . . . 11-3
Figure 11.6-2 Recommended Structural Analysis Model for Determining K-brace System Stiffness (X-brace similar) . . . . . 11-5
11.6.4 References . . . . . 11-5
11.7 Temporary Access and Lifting Holes in Top Slabs of Segmental Box Girders (Rev. 01/17) . . . . . 11-6
11.7.1 Temporary Access Holes . . . . . 11-6
11.7.2 Lifting Holes . . . . . 11-6
**Volume 1 - Revision History . . . . . R1-1**

# INTRODUCTION

## I.1 GENERAL

A. The ***FDOT Structures Design Guidelines*** (***SDG***) is Volume 1 of the ***Structures Manual***. See the ***Structures Manual Introduction*** for additional information including authority, scope, distribution and process for making revisions to the ***Manual***.

B. The ***SDG*** incorporates technical design criteria and includes additions, deletions, or modifications to the requirements of the ***AASHTO LRFD Bridge Design Specifications (LRFD)***.

C. This volume of the ***Structures Manual*** provides engineering standards, criteria, and guidelines for developing and designing bridges and retaining walls for which the Structures Design Office (SDO) and District Structures Design Offices (DSDO) have overall responsibility.

D. Information on miscellaneous roadway appurtenances as well as general administrative, geometric, shop drawing, and plans processing may be found in the ***Plans Preparation Manual (PPM), Topic Nos. 625-000-007 and 625-000-008***.

## I.2 FORMAT

A. The ***SDG*** chapters are organized more by "component," "element," or "process" than by "material" as is the ***LRFD***. As a result, the chapter numbers and content of the ***SDG*** do not necessarily align themselves in the same order or with the same number as ***LRFD***. ***LRFD*** references are provided to quickly coordinate and associate ***SDG*** criteria with that of ***LRFD***. The ***LRFD*** references may occur within article descriptions, the body of the text, or in the commentary and are shown within brackets; i.e., [1.3], [8.2.1]. See Table I.3-1 for a cross reference of the ***SDG*** to ***LRFD*** and Table I.3-2 for a cross reference of the ***SDG*** to ***AASHTO LRFD-Movable Highway Bridge Design Specifications.*** These cross references are provided only as an aid to the Designer and are not necessarily a complete listing of ***SDG*** and ***LRFD*** requirements.

B. Chapters 1 through 10 of the ***SDG*** are written in the active voice to Structural Designers, Professional Engineers, Engineers of Record, Structural Engineers, and Geotechnical Engineers working on either Conventional or Non-Conventional projects for the Florida Department of Transportation.

C. Chapter 11 of the ***SDG*** is written in the active voice to Specialty Engineers, Contractor's Engineers of Record and Prequalified Specialty Engineers working on either Conventional or Non-Conventional projects for the Florida Department of Transportation.

## I.3 CROSS REFERENCES (Rev. 01/17)

See the following tables for cross references between the ***Structures Design Guidelines*** and ***LRFD***:

## Table I.3-1 Cross Reference between AASHTO LRFD & SDG

| SECTION NO. | | DESCRIPTION |
|---|---|---|
| LRFD | SDG | |
| 1.3.4 | 2.10 | Redundancy Factors |
| 1.3.5 | 2.10 | Operational Importance Factors |
| 2.5.2.2 | 4.6.2 | Access and Maintenance |
| 2.5.2.6 | 1.2 | Deflection and Span-to-Depth Ratios |
| 2.6 | 3.3 | Foundation Scour Design |
| 2.6.6 | 6.6 | Deck Drainage |
| 3.4.1 | 2.1.1 | Load Factors and Load Combinations |
| 3.4.2 | 2.4.3 | Wind Loads During Construction |
| 3.4.1-2 | 4.6.5 | Design Requirements for Cantilever Bridges with Fixed Pier Tables |
| 3.5.1 | 2.2 | Dead Loads |
| 3.6 | 2.1.2 | Live Loads |
| 3.6.1.1.2 | 4.6.9 | Transverse Deck Loading, Analysis & Design (Mult. Presence Factors) |
| 3.6.1.2.2 | 4.6.9 | Transverse Deck Loading, Analysis & Design (Axle Loads HL 93 truck) |
| 3.6.1.2.3 | 4.6.9 | Transverse Deck Loading, Analysis & Design (Axle Loads design tandem) |
| 3.6.1.2.5 | 4.6.9 | Transverse Deck Loading, Analysis & Design (Tire Contact Area) |
| 3.6.1.3.2 | 1.2 | Deflection and Span-to-Depth Ratios |
| 3.6.5 | 2.6 | Vehicular Collision Force |
| 3.8.1 | 2.4.1 | Wind Loads on Completed Structures: WL and WS |
| 3.10.9.2 | 2.3.2 | Seismic Design for Widenings |
| 3.12.2 | 2.7.1 | Uniform Temperature |
| 3.12.2 | 6.3 | Temperature Movement |
| 3.12.3 | 2.7.2 | Temperature Gradient |
| 3.14 | 2.11 | Vessel Collision |
| 3.14.1 | 2.11.8 | Scour with Vessel Collision |
| 3.14.3 | 2.11.4 | Design Methodology - Damage Permitted |
| 3.14.4 | 2.11.3 | Design Vessel |
| 3.14.5.3 | 2.11.3 | Design Vessel LOA |
| 3.14.14 | 2.11.9 | Application of Impact Forces |
| 3.14.14.2 | 2.11.10 | Impact Forces on Superstructure |
| 4.6.2.2 | 2.8 | Barriers and Railings |
| 4.6.2.2 | 2.9 | Live Load Distribution Factors |
| 4.7.4 | 2.3.1 | Seismic Provisions |
| 5.4.2.4 | 1.4.1 | Concrete Modulus of Elasticity |
| 5.4.3 | 4.1.2 | Reinforcing Steel |
| 5.4.5 | 4.5.2 | Prestress (Strand Couplers prohibited) |
| 5.7.3.4 | 5.6.5 | Transverse Concrete Deck Analysis |
| 5.8.3 | 4.1.4 | Shear Design |
| 5.8.5 | 4.5.4 | Principal Tensile Stresses (General) |

## Table I.3-1 Cross Reference between AASHTO LRFD & SDG

| SECTION NO. | | DESCRIPTION |
|---|---|---|
| LRFD | SDG | |
| 5.9.4.2.2 | 4.5.4 | Principal Tensile Stress Limits (Service) |
| 5.9.5.3 | 4.3.1.D.6 | Pretensioned Beams (When calculating Service Limit State) |
| 5.9.5.4 | 4.3.1.D.6 | Pretensioned Beams (When calculating Service Limit State) |
| 5.10.3 | 3.6.10 | Minimum Reinforcement Spacing |
| 5.10.8 | 4.2.4 | Temperature and Shrinkage Reinforcement |
| 5.12.3 | 1.4.2 | Concrete Cover |
| 5.13.1 | 4.2 | Decks |
| 5.13.4.4 | 3.5.1 | Prestressed Concrete Piles |
| 5.13.4.5.2 | 3.6.10 | Minimum Reinforcement Spacing |
| 5.14.1.2.2 | 4.3.3 | Minimum Web Thickness |
| 5.14.2 | 4.5 | Post-Tensioning, General |
| 5.14.2.3.3 | 4.5.4 | Principal Tensile Stress Limits (Construction) |
| 5.14.2.3.4.B | 2.13.2 | Substructures for Segmental Bridges |
| 5.14.2.3.6 | 4.6.6 | Creep and Shrinkage strains - Relative Humidity of 75% |
| 5.14.4.3 | 4.4 | Precast Flat Slab Superstructures |
| 6.4.1 | 5.3 | Structural Steel |
| 6.4.3.1 | 5.4 | Bolts |
| 6.7.2 | 5.2 | Dead Load Camber |
| 6.7.3 | 5.5 | Minimum Steel Dimensions |
| 6.7.4 | 5.6.3 | Cross Frames |
| 6.7.4 | 5.7 | Diaphragms and Cross Frames for "I-Girders" |
| 6.7.5 | 5.6.4 | Lateral Bracing |
| 6.10.1.7 | 4.2.4 | Minimum Negative Flexure Concrete Deck Reinforcement |
| 6.10.11.1 | 5.8 | Transverse Intermediate Stiffeners |
| 6.10.11.2 | 5.9 | Bearing Stiffeners |
| 6.10.11.3 | 5.10 | Longitudinal Stiffeners |
| 6.13 | 5.11 | Connections and Splices |
| 6.13.2.8 | 5.11.1 | Slip Resistance |
| 6.13.3 | 5.11.2 | Welded Connections |
| 6.13.6.2 | 5.11.3 | Welded Splices |
| 9.7.1.3 | 4.2.9 | Skewed Decks |
| 9.7.2 | 4.2.4 | Deck Design |
| 9.7.2.4 | 4.2.4.A. | Empirical Design Method for Category 1 Structures not staged. |
| 9.7.2.5 | 4.2.4 | Deck Design |
| 9.7.3 | 4.2.4 | Deck Design |
| 10.5.5 | 3.5.6 | Resistance Factors |
| 10.5.5 | 3.6.3 | Resistance Factors |
| 10.5.5 & 6 | 3.8 | Spread Footings |
| 10.7.1.2 | 3.5.4 | Minimum Pile Spacing and Clearances |

## Table I.3-1 Cross Reference between AASHTO LRFD & SDG

| SECTION NO. | | DESCRIPTION |
|---|---|---|
| LRFD | SDG | |
| 10.7.1.4 | 3.5.7 | Battered Piles |
| 10.7.1.6.2 | 3.5.5 | Downdrag |
| 10.7.3.3 | 3.5.9 | Anticipated Pile Lengths |
| 10.7.3.8 | 3.5.11 | Load Tests |
| 10.7.3.8.6 | 3.5.12 | Pile Driving Resistance |
| 10.7.3.12 | 3.4 | Lateral Load |
| 10.7.6 | 3.5.8 | Minimum Tip Elevation (Piles) |
| 10.7.9 | 3.5.10 | Test Piles |
| 10.8.1.5 | 3.6.4 | Minimum Tip Elevation (Drilled Shafts) |
| 10.8.3.5.6 | 3.5.11 | Load Tests |
| 10.8.3.8 | 3.4 | Lateral Load |
| 10.8.3.9.3 | 3.6.10 | Minimum Reinforcement Spacing |
| 11.10 | 3.13.2 | Mechanically Stabilized Earth Walls |
| 11.10.1 | 3.13.2.D | Bin Walls |
| 11.10.2.1 | 3.13.2.E | Minimum Length of Soil Reinforcement |
| 11.10.2.2 | 3.13.2.F | Minimum Front Face Wall Embedment |
| 11.10.2.3 | 3.13.2.G | Facing |
| 11.10.5 | 3.13.2.H | External Stability |
| 11.10.6.3.2 | 3.13.2.I | Apparent Coefficient of Friction |
| 11.10.6.4 | 3.13.2.J | Soil Reinforcement Strength |
| 11.10.6.4.4 | 3.13.2.K | Reinforcement/Facing Connection |
| 11.5.1 | 3.13.2.B | Minimum Service Life |
| 13.7 | 6.7 | Traffic Railing |
| 13.7.2 | 6.7.6 | Requirements for Test Levels 5 and 6 |
| 13.11 | 6.2 | Curbs and Medians |
| 14.4 | 6.4.2 | Movement |
| 14.5.1 | 6.4.1 | Expansion Joint Design Provisions |
| 14.5.3.2 | 6.4.2 | Movement |
| 14.6.2-1 | 6.5.1 | Bearings - Design |

## Table I.3-2 Cross Reference between AASHTO LRFD-MHBD& SDG

| SECTION NO. | | DESCRIPTION |
|---|---|---|
| LRFD-MHBD | SDG | |
| 1.4.4 | 8.1.9 | Movable Bridge Traffic Signals and Safety Gates |
| 1.4.4.6.2 | 8.8.15 | Navigation Lights |
| 1.5 | 8.6.3 | Span Balance |
| 5.4 | 8.5.1 | Requirements for Mechanical Drive Systems |
| 5.4.2 | 8.5 | Speed Control for Leaf-driving Motors |
| 5.6 | 8.6.7 | Brakes |
| 6.4.1.4 | 8.6.11 | Anchors |
| 6.7.5 | 8.6.5 | Open Gearing |
| 6.7.6 | 8.6.4 | Speed Reducers |
| 6.7.7 | 8.6.10 | Bearings (Sleeve and Anti-Friction) |
| 6.7.8 | 8.6.1 | Trunnions and Trunnion Bearings |
| 6.7.9.3 | 8.6.8 | Couplings |
| 6.7.13 | 8.6.7 | Brakes |
| 6.7.15 | 8.6.12 | Fasteners |
| 6.8.1.2 | 8.6.2 | Racks and Girders |
| 6.8.1.3 | 8.6.1 | Trunnions and Trunnion Bearings |
| 6.8.1.5.1 | 8.6.6 | Span Locks |
| 7 | 8.5.2 | Requirements for Hydraulic Drive Systems |
| 7 | 8.7 | Hydraulic Systems |
| 7.5.5 | 8.7.1 | Hydraulic Pumps |
| 7.5.6 | 8.7.3 | Control Components |
| 7.9.1 | 8.7.4 | Hydraulic Lines |
| 8 | 8.8 | Electrical |
| 8.1 | 8.8.1 | Electrical Service |
| 8.3.8 | 8.8.19 | Automatic Transfer Switch |
| 8.3.9 | 8.8.18 | Engine Generators |
| 8.4 | 8.8.8 | Electrical Control |
| 8.4.1 | 8.8.11 | Safety Interlocking |
| 8.4.2.3 | 8.8.9 | Programmable Logic Controllers |
| 8.4.4 | 8.8.10 | Limit and Seating Switches |
| 8.4.5 | 8.8.12 | Instruments |
| 8.4.6 | 8.8.13 | Control Console |
| 8.5 | 8.8.7 | Alternating Current Motors |
| 8.6 | 8.8.6 | Motor Controls |
| 8.9 | 8.8.2 | Conductors |
| 8.9.5 | 8.8.16 | Electrical Connections between Fixed and Moving Parts |
| 8.9.7 | 8.8.17 | Electrical Connections across the Navigable Channel |
| 8.11 | 8.8.5 | Service Lights |
| 8.12 | 8.8.3 | Grounding and Lightning Protection |
| 8.13 | 8.8.3 | Grounding and Lightning Protection |

# 1 GENERAL REQUIREMENTS

## 1.1 GENERAL

This Chapter clarifies, supplements, and contains deviations from the information in ***LRFD*** Sections [2], [5], and [6]. These combined requirements establish material selection criteria for durability to meet the 75-year design life requirement established by the Department.

### 1.1.1 Design Review

See the ***PPM***, Volume 1, Chapter 26 for definitions of Category 1 and Category 2 bridges and design review responsibilities.

### 1.1.2 Substructure and Superstructure Definitions

See the substructure and superstructure definitions in the FDOT ***Standard Specifications for Road and Bridge Construction***, Section 1-3 Definitions, and note the following:

A. Box culverts and bulkheads are substructures. Retaining walls, including MSE walls, have their own environmental classification procedure.

B. Approach slabs are superstructure; however, Class II Concrete (Bridge Deck) will be used for all environmental classifications.

### 1.1.3 Clearances (Rev. 01/17)

A. Vertical Clearances

1. The vertical clearance of bridges over water is the minimum distance between the underside of the superstructure and the normal high water (NHW) for navigable water crossings or the mean high water (MHW) for coastal crossings. See ***PPM***, Volume 1, Section 2.10 for vertical clearance requirements over water. When applicable, vertical clearance is measured at the inside face of the fender system.

2. The vertical clearance for grade separations over roads or railroads is the minimum distance between the underside of the superstructure or substructure, as applicable, and road or railroad. See ***PPM***, Volume 1, Section 2.10.

3. See ***SDG*** 8.1.4 for Movable Bridge clearance requirements.

4. For prestressed beam/girder superstructures, measure vertical clearance to a chord drawn between the tops of the bearing pads/beveled bearing plates at their centerlines as shown in Figure 1.1.3-1.

B. See ***SDG*** 8.1.5 for Movable Bridge horizontal clearance requirements.

**Figure 1.1.3-1 Vertical Clearance Schematic for Prestressed Beams/Girders**

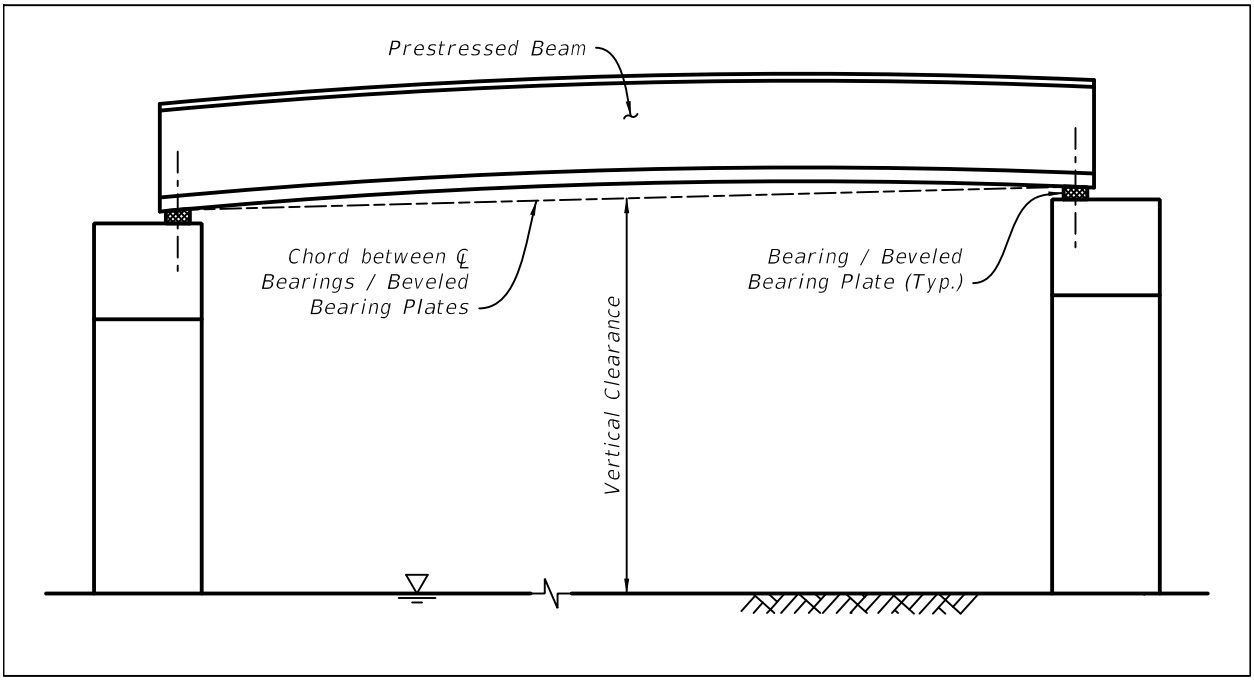


## 1.1.4 Bridge Height Classifications

FDOT classifications of bridges over water are based on the following vertical clearances:

A. Low Level - less than 20 feet.

B. Medium Level - 20 feet or greater but less than 45 feet.

C. High Level - 45 feet or greater.

## 1.1.5 Buy America Provisions

The Code of Federal Regulations, 23 CFR 635.410 requires that steel or iron products (including coatings) used on Federal Aid Projects must be manufactured in the United States. "Buy America" provisions are covered in ***FDOT Specifications*** Section 6-5 and ***PPM***, Volume 1, Chapter 13.

## 1.1.6 ADA on Bridges

Sidewalks on bridges and approaches must comply with the Americans with Disabilities Act (ADA) and Florida Accessibility Code. Generally, the maximum longitudinal slope of sidewalks along any grade or vertical curve, including the effects of superelevation transition, should be limited to 5%. Continuous handrails and landing areas are required for the portions of sidewalks with longitudinal slopes in excess of 5%. Sidewalk cross-slopes must not exceed 2%. See ***Structures Detailing Manual*** (***SDM***) ***SDM*** Chapter 18 for sidewalk and landing area details for use when longitudinal slopes exceed 5% and for details of expansion joint treatments. See also ***ADA Standards for Transportation Facilities***, Section 405 (Ramps) and Section 505 (Handrails).

### 1.1.7 Design Life

If the structure design life exceeds the ***LRFD*** 75 year requirement, coordinate with the State Materials Office to develop the required materials specifications and the SDO for other related design and detailing requirements.

### 1.1.8 Welding of Aluminum Pedestrian/Bicycle Railings

In ***LRFD*** [7.4.1], the maximum tension limit for welded aluminum alloy 6061-T6 ($F_{tyw6061}$) in pedestrian/bicycle railings shall be taken as 20 ksi.

*Commentary: The welded aluminum tensile yield strength of 20 ksi for design using alloy 6061-T6 has been in use since at least 1994. The 2013* ***LRFD*** *Interims reduced the welded tensile yield strength to match the 2010* ***Aluminum Design Manual*** *(The Aluminum Association). Successful in-service performance and anecdotal evidence from testing in the FDOT Structures Research Center indicate that 20 ksi is an acceptable limit for pedestrian/bicycle railing structures and shall remain in effect until further research is completed.*

## 1.2 DEFLECTION AND SPAN-TO-DEPTH RATIOS [2.5.2.6] (Rev. 01/17)

A. Satisfy either the Span-to-Depth Ratios in ***LRFD*** [2.5.2.6.3] or the criteria for deflection in ***LRFD*** [2.5.2.6.2] and [3.6.1.3.2].

B. For the design of bridges with pedestrian traffic or bridges where vehicular traffic is expected to queue, the criteria for deflection in ***LRFD*** [2.5.2.6.2] and [3.6.1.3.2] are mandatory.

C. For Steel Girder bridges where the girders are designed as non-composite in the negative moment regions, both the above referenced Span-to-Depth Ratios and LL deflection criteria shall be satisfied.

## 1.3 ENVIRONMENTAL CLASSIFICATIONS

### 1.3.1 General

A. The District Materials Engineer or the Department's Environmental/Geotechnical Consultant will determine the environmental classifications for all new bridge sites. Environmental classification is required for major widenings (see definitions in ***SDG*** Chapter 7) and may be required for minor widenings. This determination will be made before or during the development of the Bridge Development Report (BDR)/30% Plans Stage (see the ***PPM*** Volume 1 Chapter 26) and the results will be included in the documents. The bridge site will be tested, and separate classifications will be determined for both superstructure and substructure.

| **Modification for Non-Conventional Projects:** |
| --- |
| Delete ***SDG*** 1.3.1.A and see the RFP for requirements. |

B. In the bridge plans "General Notes," include the environmental classification for both the superstructure and substructure according to the following classifications:
   1. Slightly Aggressive
   2. Moderately Aggressive
   3. Extremely Aggressive

C. For the substructure, additional descriptive data supplements the environmental classification. After the classification, note in parentheses the source and magnitude of the environmental classification parameters resulting in the classification.

*Commentary: As an example, for a proposed bridge located in a freshwater swampy area where the substructure is determined to be in an Extremely Aggressive environment due to low soil pH of 4.5 and the superstructure to be in a Slightly Aggressive environment, the format on the bridge plans will be:*

ENVIRONMENTAL CLASSIFICATION:
Substructure: Extremely Aggressive (Soil - pH = 4.5)
Superstructure: Slightly Aggressive

D. The substructure will not be classified less severely than the superstructure.

## 1.3.2 Classification Criteria

A. Bridge substructure and superstructure environments will be classified as Slightly Aggressive, Moderately Aggressive, or Extremely Aggressive environments according to the following criteria and as shown in Figure 1.3.3-1. The superstructure is defined as all components from the bearings upward. Conversely, every element below the bearings is classified as substructure.

B. Marine Structures: Structures located over or within 2500 feet of a body of water containing chloride above 2000 ppm are considered to be marine structures and all other structures will be considered non-marine structures. Only chloride test results are required to determine if a structure is classified as marine. Results of chloride tests for most locations are available on SharePoint at the following address: http://smsharepoint.sm.dot.state.fl.us/sites/SMO/structures/corrosion/Lists/Bridge%20Data/DefaultView.aspx

*NOTE: Access to this database is currently limited to FDOT personnel only. Consultants needing information from this database should contact the appropriate district office for assistance.*

Classify superstructure and substructure as follows:

1. For structures over or within 2,500 feet of a body of water with chloride concentrations in excess of 6000 ppm, both superstructure and substructure will be classified as extremely aggressive.
2. For structures over any water with chloride concentrations of 2000 to 6000 ppm, the substructure will be classified as extremely aggressive. Superstructures located at 12 feet or less above the mean high water elevation will be classified as extremely aggressive. Superstructures located at an elevation greater than 12 feet above the mean high water elevation will be classified as moderately aggressive.

3. For structures within 2,500 feet of any body of water with a chloride concentration of 2000 to 6000 ppm, but not directly over the body of water, the superstructure will be classified as moderately aggressive. The substructure will follow the non-marine criteria in Table 1.3.2-1.

C. Non-Marine Structures: All structures that do not meet the criteria above are considered non-marine structures.

1. Substructure: Classify all non-marine substructures in contact with water and/or soil as follows:

## Table 1.3.2-1 Criteria for Substructure Environmental Classifications

| Classification | Environmental Condition | Units | Steel | | Concrete | |
|---|---|---|---|---|---|---|
| | | | Water | Soil | Water | Soil |
| Extremely Aggressive (If any of these conditions exist) | pH | | < 6.0 | | < 5.0 | |
| | Cl | ppm | > 2000 | | > 2000 | |
| | $SO_4$ | ppm | N.A. | | > 1500 | > 2000 |
| | Resistivity | Ohm-cm | < 1000 | | < 500 | |
| Slightly Aggressive (If all of these conditions exist) | pH | | > 7.0 | | > 6.0 | |
| | Cl | ppm | < 500 | | < 500 | |
| | $SO_4$ | ppm | N.A. | | < 150 | < 1000 |
| | Resistivity | Ohm-cm | > 5000 | | > 3000 | |
| Moderately Aggressive | This classification must be used at all sites not meeting requirements for either slightly aggressive or extremely aggressive environments. | | | | | |
| pH = acidity ($-\log_{10}H^+$; potential of Hydrogen), Cl = chloride content, $SO_4$ = Sulfate content. | | | | | | |

2. Superstructure: Any superstructure located within 2,500 feet of any coal burning industrial facility, pulpwood plant, fertilizer plant, or any other similar industry classify as Moderately Aggressive. All others classify as Slightly Aggressive.

D. For MSE wall environmental requirements, see ***SDG*** 3.12.C. MSE wall environmental requirements are partially based on air contaminants. See ***Design Standards*** Index 6020 for concrete class and cover requirements based on resulting FDOT Wall Type.

E. Requirements for the use of uncoated weathering steel superstructures are as follows. See also ***SDG*** 5.12.

1. Uncoated weathering steel superstructures may be used if the structure is located 4.0 miles or more from the coast regardless of the superstructure environmental classification. Vertical and horizontal clearances to a body of water shall comply with the following requirements:

a. For structures over a body of water, the minimum vertical clearance over mean or normal high water shall be at least 12 feet for a body of water with chloride concentrations less than 6000 ppm and at least 25 feet for a body of water with chloride concentrations equal to or greater than 6000 ppm.

b. For structures adjacent to a body of water, the minimum horizontal clearance shall be at least 25 feet from a body of water with chloride concentrations less than 6000 ppm and at least 100 feet from a body of water with chloride concentrations equal to or greater than 6000 ppm.

2. For structures located within 4.0 miles of the coast, the use of uncoated weathering steel superstructures may be considered if site conditions, as determined by the State Materials Office, satisfy each of the following criteria:

   a. The maximum airborne salt deposition rate, as determined by ASTM Test G140, is less than 5 mg/m2/day (measured over a 30 day period).

   b. The maximum average concentration for SO2, as determined by ASTM Test G91, does not exceed 60 mg/m2/day (measured over a 30 day period).

   c. Yearly average Time of Wetness (TOW), as determined by ASTM Test G84, does not exceed 60%.

   Vertical and horizontal clearances to a body of water shall be site specific as determined by the State Materials Office. The minimum vertical clearance so determined will not be less than 12 feet above mean or normal high water.

| **Modification for Non-Conventional Projects:** |
| --- |
| Follow the requirements of ***SDG*** 1.3.2.E unless otherwise shown in the RFP. |

## 1.3.3 Chloride Content

A. To optimize the materials selection process, the Designer and/or District Materials Engineer have the option of obtaining representative cores to determine chloride intrusion rates for any superstructure within 2,500 feet of any major body of water containing more than 6,000-ppm chlorides. The District Materials Engineer will take core samples from bridge superstructures in the immediate area of the proposed superstructure. The sampling plan with sufficient samples representing the various deck elevations will be coordinated with the State Corrosion Engineer. The Corrosion Laboratory of the State Materials Office will test core samples for chloride content and intrusion rates.

*Commentary: Generally, all superstructures that are within line-of-sight and within 2,500 feet of the Atlantic Ocean or the Gulf of Mexico are subject to increased chloride intrusion rates on the order of 0.016 lbs/cy/year at a 2-inch concrete depth. The intrusion rate decreases rapidly with distance from open waters and/or when obstacles such as rising terrain, foliage or buildings alter wind patterns*

| **Modification for Non-Conventional Projects:** |
| --- |
| Delete ***SDG*** 1.3.3.A and see the RFP for requirements. |

B. After representative samples are taken and tested, Table 1.3.3-1 will be used to correlate the core results (the chloride intrusion rate in lbs/cy/year at a depth of 2-inch) with the classification.

### Table 1.3.3-1 Chloride Intrusion Rate/Environmental Classification

| Chloride Intrusion Rate | Classification |
|---|---|
| ≥ **0.016** lbs/cy/year | Extremely Aggressive |
| < **0.016** lbs/cy/year | Moderately Aggressive |

See Figure 1.3.3-1 Flow Chart for determining Environmental Classification.

### Figure 1.3.3-1 Flow Chart for Environmental Classification of Structures

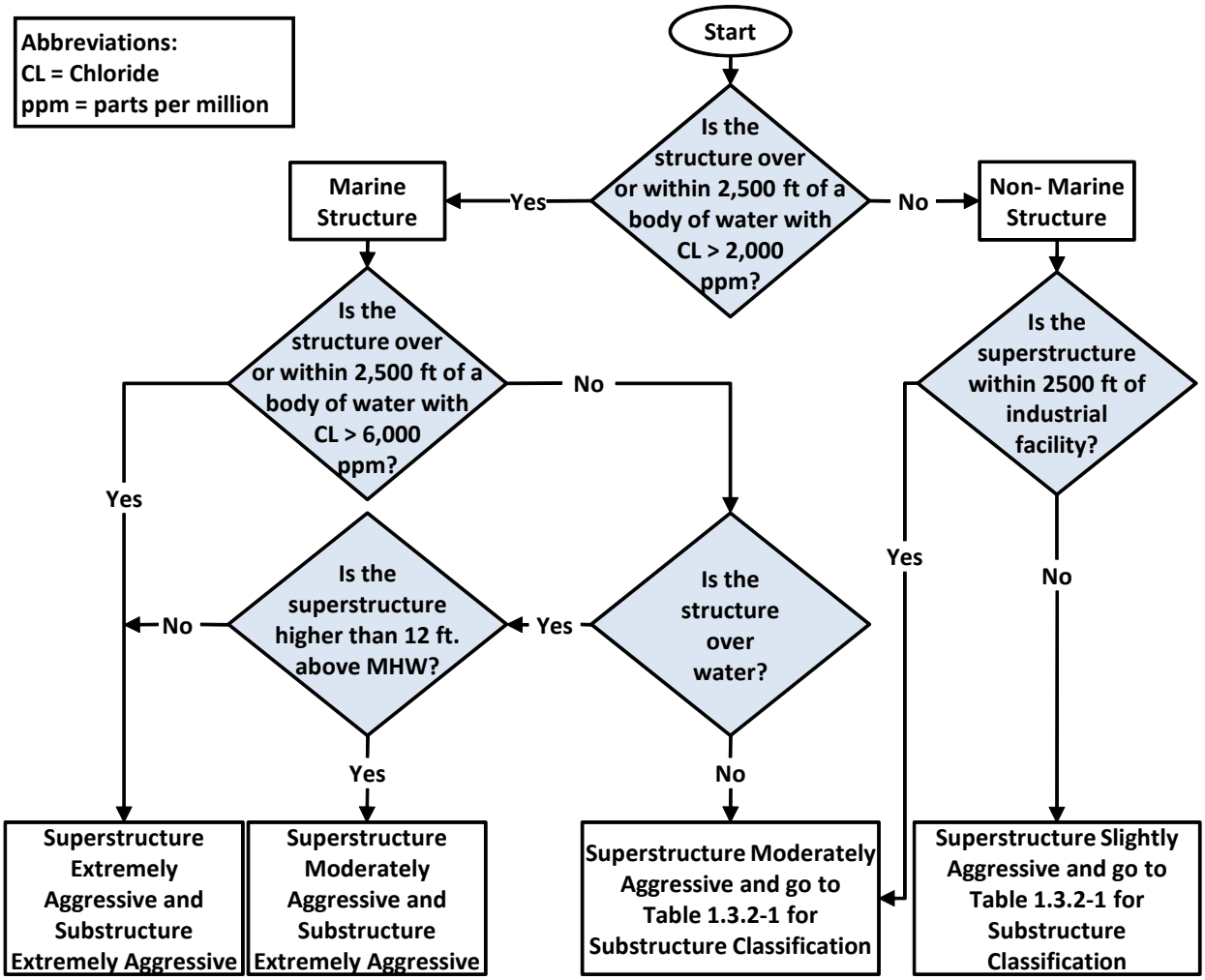


## 1.4 CONCRETE AND ENVIRONMENT [5.12.1]

### 1.4.1 General (Rev. 01/17)

A. Use $\mathbf{K_1}$ = 1.0 as the correction factor when calculating the Modulus of Elasticity in ***LRFD*** [5.4.2.4]. Use $\mathbf{w_c}$ = 0.145 kcf.

*Commentary: These values are based on the use of Florida limerock aggregate.The $K_1$ factor has been revised to be consistent with new Modulus of Elasticity equations in the **LRFD** 2015 Interims.*

| **Modification for Non-Conventional Projects:** |
|---|
| Delete ***SDG*** 1.4.1.A and insert the following:<br>A. If Florida limerock coarse aggregate or other similar limerock aggregate is used in design, use $\mathbf{K_1}$ = 1.0 as the correction factor when calculating the Modulus of Elasticity in ***LRFD*** [5.4.2.4]. For concrete made with limerock coarse aggregate, use $\mathbf{w_c}$ = 0.145 kcf. |

B. Use the following reinforcing steel for concrete design:

- ASTM A615, Grade 60 deformed carbon-steel bar;
- ASTM A1064, Grade 75 deformed welded wire reinforcement (WWR).

Use the following steel reinforcing for concrete design with prior approval from the SDO:

- ASTM A615, Grades higher than Grade 60;
- ASTM A955 Grade 60 or 75, or ASTM A276, UNS S31603 or S31803 deformed stainless steel bar;
- ASTM A1035, Grade 100 deformed low-carbon chromium steel bar. Do not consider the use of this reinforcing steel as adding any additional resistance to corrosion.

Specify the required type and grade of reinforcing steel in the Plans. See ***SDM*** 5.2.

C. Do not specify epoxy coated reinforcing steel.

D. The use of lightweight concrete for structural applications requires prior SDO approval.

| **Modification for Non-Conventional Projects:** |
|---|
| Delete ***SDG*** 1.4.1.D and insert the following:<br>D. Lightweight concrete is not permitted for use in pre-tensioned or post-tensioned components. |

E. Do not specify aluminum items (coated or uncoated) to be embedded in concrete components.

## 1.4.2 Concrete Cover (Rev. 01/17)

Delete ***LRFD*** [5.12.3] and substitute the following requirements:

A. The requirements for concrete cover over reinforcing steel are listed in ***SDG*** Table 1.4.2-1. Examples of concrete cover are shown in Figures 1.4.2-1 through 1.4.2-6.

## Figure 1.4.2-1 End Bent (All Environments)

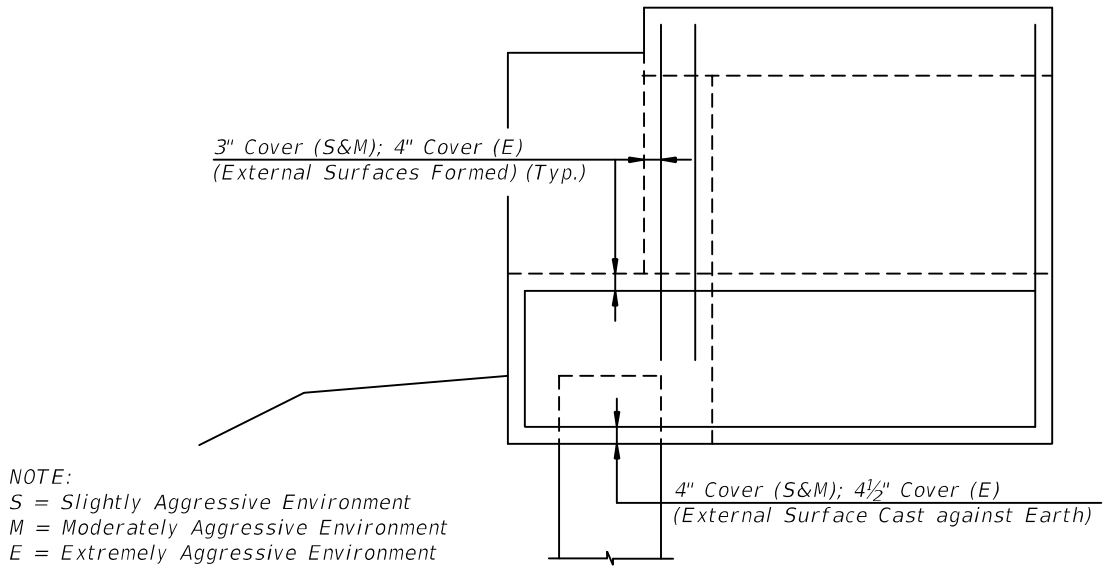


NOTE:
S = Slightly Aggressive Environment
M = Moderately Aggressive Environment
E = Extremely Aggressive Environment

END BENT
(ALL ENVIRONMENTS)

## Figure 1.4.2-2 Piers (All Environments) (1 of 3)

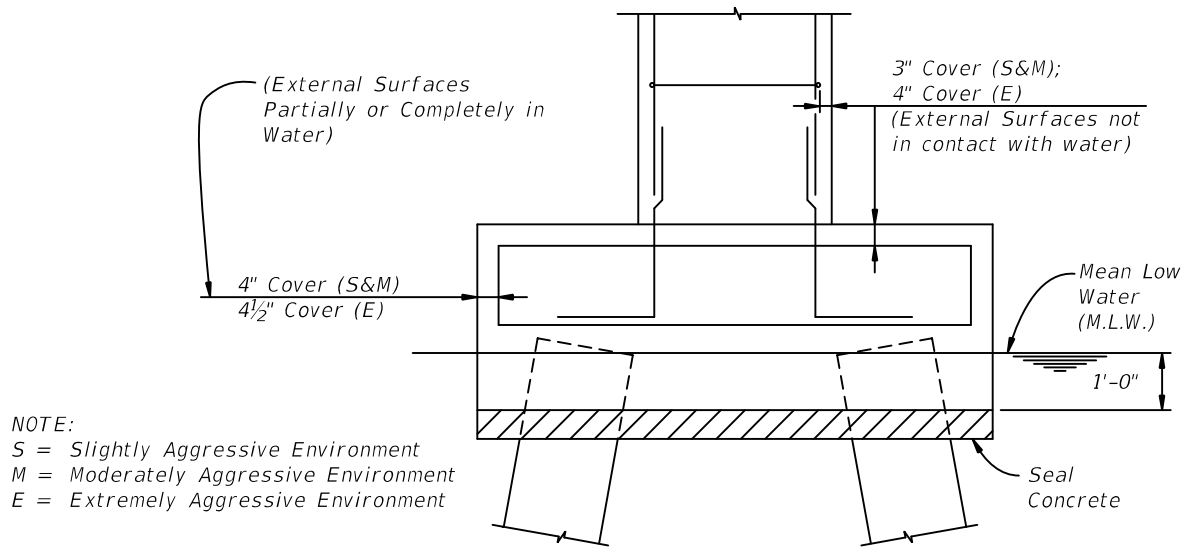


NOTE:
S = Slightly Aggressive Environment
M = Moderately Aggressive Environment
E = Extremely Aggressive Environment

PIER IN WATER
(ALL ENVIRONMENTS)

## Figure 1.4.2-3 Piers (All Environments) (2 of 3)

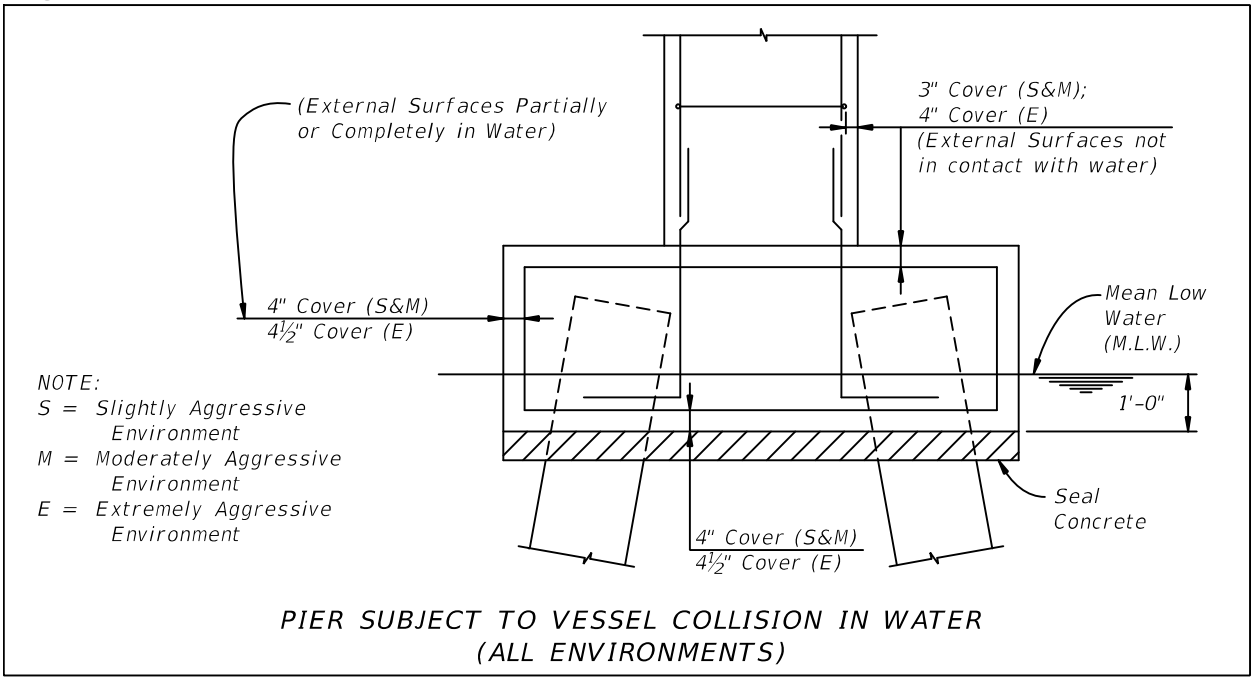


## Figure 1.4.2-4 Piers (All Environments) (3 of 3)

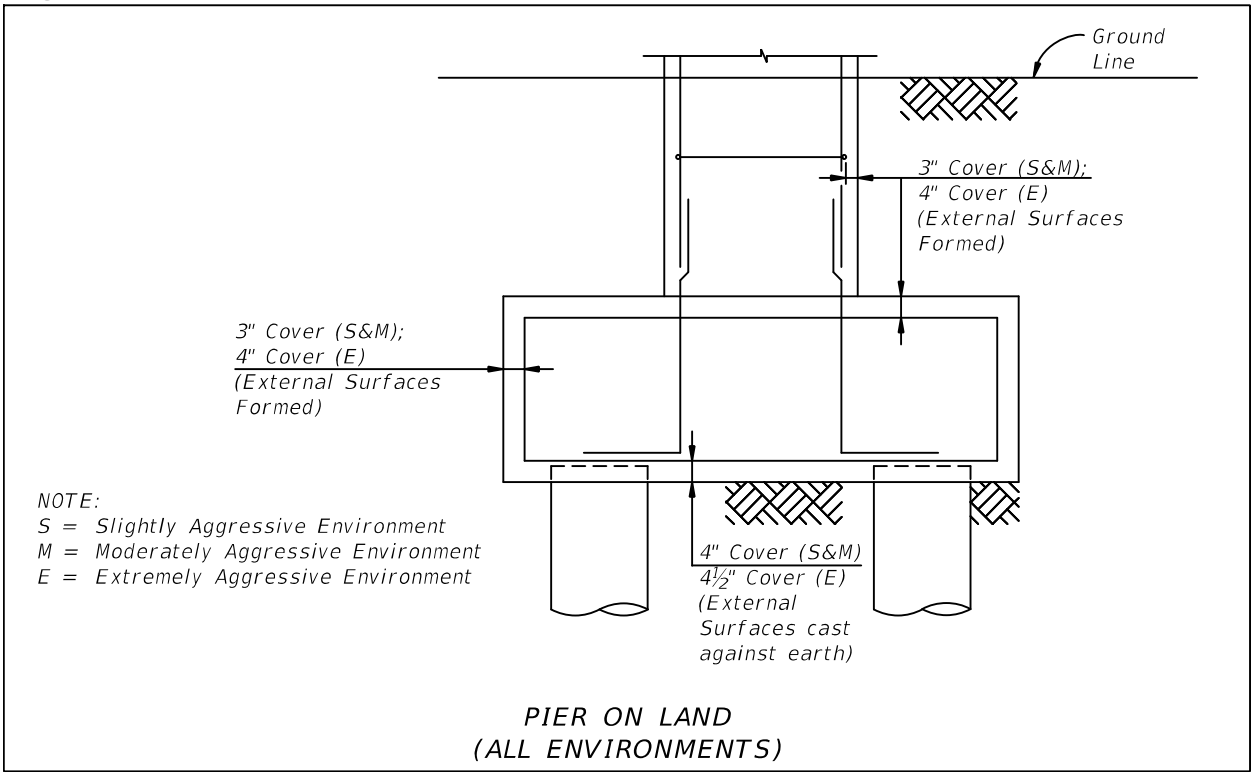

## Figure 1.4.2-5 Pier Cap and Intermediate Bent (All Environments)

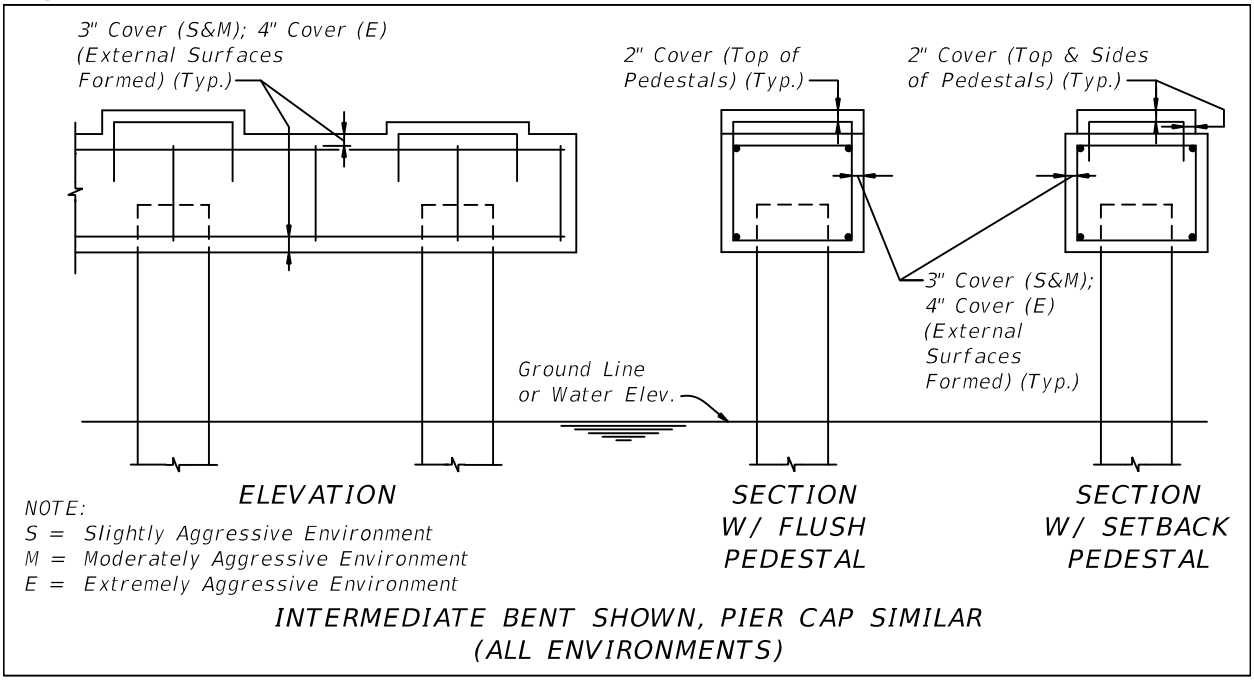


## Figure 1.4.2-6 Cast-in-Place Deck / Beam Supported Superstructure (All environments)

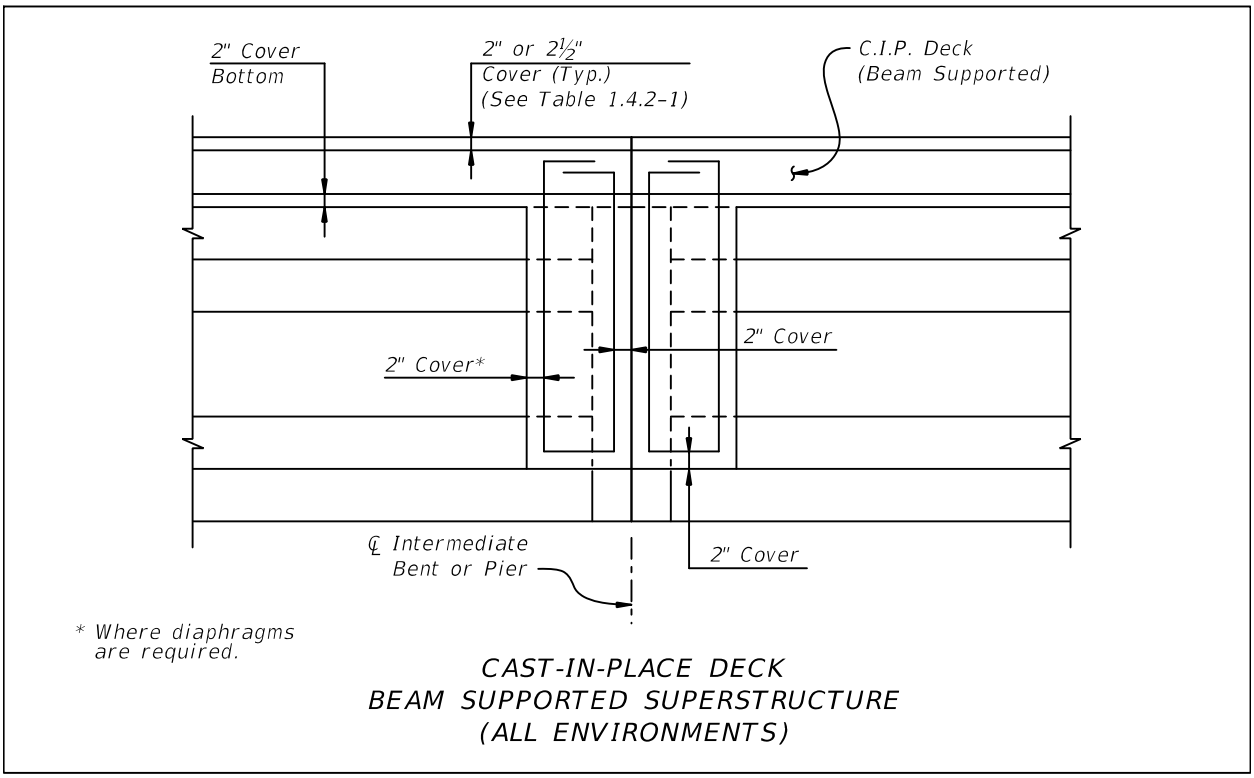


B. When deformed reinforcing bars are in contact with other embedded items such as post-tensioning ducts, the actual bar diameter, including deformations, must be taken into account in determining the design dimensions of concrete members and in applying the design covers of Table 1.4.2-1.

## Table 1.4.2-1 Concrete Cover

| Component (Precast and Cast-in-Place) | Concrete Cover (inches) | |
|---|---|---|
| | S or M[1] | E[1] |
| **Superstructure** | | |
| All internal and external surfaces (except riding surfaces) of segmental concrete boxes, and external surfaces of prestressed beams (except the top surface) | 2 | |
| Top surface of beam top flange | ¾ (min.) | |
| Top deck surfaces: Short Bridges[2] | 2 | |
| Top deck surfaces: Long Bridge[2] | 2½ [3] | |
| All components and surfaces not included above (including wall copings and traffic and pedestrian railings which are not allowed to be constructed using the slip forming method) | 2 | |
| Front and back surfaces of pedestrian railings and traffic railings, other than single-slope traffic railings, which may be constructed using the slip forming method | 3 | |
| Front and back surfaces of single-slope traffic railings which may be constructed using the slip forming method | 2½ | |
| Noise Wall Posts and Panels | 2 | |
| Precast Concrete Perimeter Wall Posts and Panels | 1¾ | |
| **Substructure** | | |
| External surfaces cast against earth and surfaces in contact with water | 4 | 4½ |
| Exterior formed surfaces, columns, and tops of footings not in contact with water and all components or surfaces not included elsewhere | 3 | 4 |
| Internal surfaces | 3 | |
| Beam/Girder Pedestals | 2 | |
| Prestressed Piling | 3 | |
| Spun Cast Cylinder Piling[4] | 2 | |
| Drilled Shafts | 6 | |
| Auger Cast Piles | 4 | |
| Retaining Walls (Excluding MSE walls[5] and external surfaces cast against earth) | 2 | 3 |
| Box and Three-sided Culverts | 2 | 3 |
| Bulkheads | 4 | |

1. S = Slightly Aggressive; M = Moderately Aggressive; E = Extremely Aggressive
2. See Short & Long Bridge Definitions and exempted bridge types in ***SDG*** Chapter 4.
3. Cover dimension includes a 0.5-inch allowance for planing; see ***SDG*** 4.2.2.
4. Concrete for spun cast cylinder piling to be used in an extremely aggressive environment must have a documented chloride ion penetration apparent diffusion coefficient with a mean value of 0.005 $in^2$/year or less, otherwise 3-inch concrete cover is required. See ***SDG*** 3.5.17 for further limits on splicing of these piles.
5. See ***SDG*** 3.13 for MSE wall cover requirements.

### 1.4.3 Class and Admixtures

A. The "General Notes" for both bridge plans and wall plans require the clear identification of, and delineation of use for, concrete class and admixtures used for strength and durability considerations.

B. Use the class of concrete as shown in Table 1.4.3-1 for a given component or usage based on the environmental classification unless otherwise directed or approved by the Department.

**Modification for Non-Conventional Projects:**

Delete ***SDG*** 1.4.3.B and substitute the following:

B. Unless otherwise shown in the RFP, use the class of concrete as shown in Table 1.4.3-1 for a given component or usage based on the environmental classification, or a higher class of concrete required for the same component or usage located in a more aggressive environment.

### Table 1.4.3-1 Structural Concrete Class Requirements

| Component or Usage | | Environmental Classification | | |
|---|---|---|---|---|
| | | **Slightly Aggressive** | **Moderately Aggressive** | **Extremely Aggressive** |
| **Superstructure** | Cast-in-Place (other than Bridge Decks) | Class II | Class IV | |
| | Cast-in-Place Bridge Deck (Including Diaphragms) | Class II (Bridge Deck) | Class IV | |
| | Approach Slabs | Class II (Bridge Deck) | | |
| | Precast or Prestressed | Class III, IV, V or VI | Class IV, V or VI | |
| **Substructure** | Cast-in-Place (except as listed below) | Class II | Class IV | Class IV or V |
| | Precast or Prestressed (other than piling) | Class III, IV, V or VI | Class IV, V, or VI | |
| | Cast-in-Place Columns located directly in splash zone | Class II | Class IV | |
| | Piling | Class V (Special) or VI | | |
| | Drilled Shafts | Class IV (Drilled Shafts) | | |
| | Retaining Walls | Class II or III | Class IV | |
| | Seals | Class III (Seal) | | |
| See Table 1.4.3-2 for minimum 28-day compressive strengths.<br>Corrosion Protection Measures: Calcium nitrite, silica fume, metakaolin or ultrafine fly ash admixtures may be required. Admixture use must conform to the requirements of "Concrete Class and Admixtures for Corrosion Protection." | | | | |

C. For design, use the minimum 28-day compressive strengths given in ***SDG*** Table 1.4.3-2.

*Commentary: Example:*

*Component - submerged piling*

*Environment - Extremely Aggressive over saltwater*

*Concrete Class - Class V (Special) with silica fume, metakaolin or ultrafine fly ash*

*Quality Control and Design Strength at 28 days - 6,000 psi*

| **Modification for Non-Conventional Projects:** |
|---|
| Delete ***SDG*** 1.4.3.C and replace with the following.<br>C. Limit concrete compressive design strength to 10 ksi. |

## Table 1.4.3-2 Concrete Classes and Strengths

| Class of Concrete | Minimum 28-Day Compressive Strength (ksi) |
|---|---|
| Class II | 3.4 |
| Class II (Bridge Deck) | 4.5 |
| Class III | 5.0 |
| Class III (Seal) | 3.0 |
| Class IV | 5.5 |
| Class IV (Drilled Shaft) | 4.0 |
| Class V (Special) | 6.0 |
| Class V | 6.5 |
| Class VI | 8.5 |

D. Admixtures for Corrosion Protection: Primary components of structures located in Moderately or Extremely Aggressive environments utilize Class IV, V, V (Special), or VI Concrete. These concrete classes use fly ash, slag, silica fume, metakaolin, ultrafine fly ash and/or cement type to reduce permeability.

E. Structures located in Extremely Aggressive marine environments may require additional measures as defined below. These additional measures and their locations must be clearly identified in the "General Notes". Technical Special Provisions may be required for their implementation.

F. The use of concrete admixtures to enhance durability must be consistent with these guidelines. The Engineer of Record may request additional measures to be approved by the State Corrosion Engineer and the State Structures Design Engineer.

G. When the environmental classification is Extremely Aggressive due to the presence of chloride in the water of a marine environment:

1. For all superstructure components located within the splash zone, contact the State Materials Office for guidance on cover and design mix requirements.

| **Modification for Non-Conventional Projects:** |
|---|
| Delete ***SDG*** 1.4.3.G.1 and see the RFP for requirements. |

2. Specify the use of silica fume, metakaolin or ultrafine fly ash in all:
   a. Piles of pile bents with carbon or stainless steel strand, spirals and/or reinforcing.
   b. Retaining walls, including MSE walls located within the splash zone and within 50 feet of the shoreline.
   c. Substructure elements, excluding footings, located within the splash zone.
3. Do not specify silica fume, metakaolin or ultrafine fly ash for drilled shafts.

The splash zone is the vertical distance from 4 feet below MLW to 12 feet above MHW.

## 1.4.4 MASS CONCRETE

A. Consider Mass Concrete requirements in selecting member sizes and avoid Mass Concrete if practical; however, when its use is unavoidable, indicate which portions are Mass Concrete.

B. Mass Concrete is defined as: "Any large volume of cast-in-place or precast concrete with dimensions large enough to require that measures be taken to cope with the generation of heat and attendant volume change so as to minimize cracking."

C. Criteria for Denoting Mass Concrete in Plans.

1. All Bridge components Except Drilled Shafts and Segmental Superstructure Pier and Expansion Joint Segments: When the minimum dimension of the concrete exceeds 3 feet and the ratio of volume of concrete to the surface area is greater than 1 foot, provide for mass concrete. (The surface area for this ratio includes the summation of all the surface areas of the concrete component being considered, including the full underside (bottom) surface of footings, caps, construction joints, etc.) Note volume and surface area calculations in units of feet.
2. Drilled Shafts: All drilled shafts with design diameters greater than 6 feet shall be designated as mass concrete.
3. Segmental Superstructure Pier and Expansion Joint Segments: Provide for mass concrete when design concrete strengths greater than 6500 psi are used regardless of the ratio of volume to surface area. For design concrete strengths less than or equal to 6500 psi, provide for mass concrete when the ratio of volume to surface area is greater than 1 foot. Consider interior core volume and use only the surface area exposed to air. Do not include wings, as well as flange or web extensions beyond the core. Make no deductions for post-tensioning ducts, minor utilities less than 6" diameter, etc. See Figure 1.4.4-1 for a representation of the "interior core" (shown in red) to be considered. For cases when typical precast segments are used as a form "shell" for cast-in-place diaphragm core concrete, do not consider the "shell" concrete dimensions in determining the ratio. Consider only the monolithically-poured core concrete limits for volume and the surface area of that volume that is exposed to air.

*Commentary: The intent is to consider the full volume of monolithically-poured concrete contributing to heat of hydration, neglecting the large surface area regions in the outer extremities that would tend to unconservatively skew the calculation. Also, neglecting the core surface area not directly exposed to air is a conservative assumption accounting for the fact that these regions are partially insulated by the adjacent concrete.*

*The volume to surface ratio is not used to determine if mass concrete provisions are necessary for pier and expansion joint segments when design concrete strengths greater than 6500 psi are used. Instead, all such segments are assumed to be constructed of mass concrete because of the potential for the development of higher heat of hydration temperatures that are associated with higher strength concrete mixes.*

4. Straddle and Integral Pier Caps: Provide for mass concrete when design concrete strengths greater than 6500 psi are used regardless of the ratio of volume to surface area. For design concrete strengths less than or equal to 6500 psi, provide for mass concrete when the ratio of volume to surface area is greater than 1 foot.

*Commentary: These requirements are based on those used for segmental superstructure pier and expansion joint segments. See also Commentary above.*

D. Take precautionary measures to reduce concrete cracking in large volumes of concrete. To prevent or control cracking in Mass Concrete, analyze the placement of construction joints and reinforcing steel. Refer to other methods as outlined in ACI 207, ACI 224, and ACI 308.

E. For estimated bridge pay item quantities, include separate pay item numbers for Mass Concrete (Substructure) and Mass Concrete (Superstructure). Do not consider seal Concrete as Mass Concrete.

| **Modification for Non-Conventional Projects:** |
| --- |
| Delete ***SDG*** 1.4.4.E. |

## Figure 1.4.4-1 Mass Concrete for Pier and Expansion Joint Segments

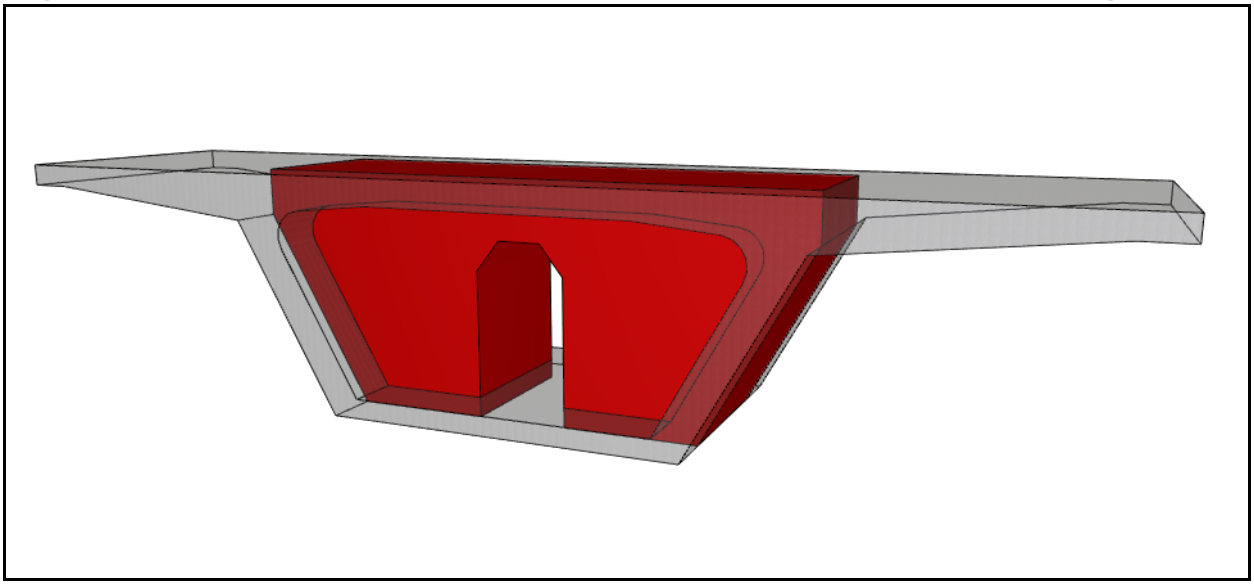

## 1.4.5 Concrete Surface Finishes

A. The use of smooth uncoated surfaces is preferred for all concrete elements. Textures, striations and/or graphics that are compliant with Department requirements may be used where appropriate at the discretion of the EOR for all structures other than noise, perimeter and retaining walls. Approval by the District Design Engineer (DDE) is required for the use of textures or graphics other than those shown in ***Design Standards*** Index 5200 for retaining walls and noise walls. Allowable textures for the front face of perimeter walls are limited to those used for commercially and readily available masonry blocks. The back face of masonry blocks and precast wall panels used for perimeter walls shall be smooth. Coatings, tints or stains may only be used on specific concrete elements as follows.

B. Except as noted below, when approved by the DDE, Class 5 coatings, tints or stains may be used on bridges and noise, perimeter and retaining walls for which enhanced aesthetic treatments are required because of their close proximity to and/or high visibility from important or popular locations with the following land uses: historical, tourism, commercial, recreational or residential. Approval by the Chief Engineer is required for the use of coatings, tints or stains on all noise walls in non-urban locations and on all structures not specifically listed above.

C. Class 5 coatings, tints or stains may be used only on the outside of concrete traffic railings and parapets mounted on bridges and retaining walls as described in the preceding paragraph. Approval by the Chief Engineer is required for the use Class 5 coatings, tints or stains on median traffic railings and the inside and top surfaces of outside shoulder traffic railings and parapets mounted on bridges and retaining walls. See ***PPM*** Volume 1, Chapter 4 for the companion policy on the use of Class 5 coatings on roadway concrete barrier walls.

D. The Department will cover the cost for coatings, tints or stains on bridges and noise, perimeter and retaining walls only as described above. If a Local Maintaining Agency desires a bridge or noise, perimeter or retaining wall with coatings, tints or stains and the structure does not qualify for such treatment as determined by the Department, the structure may be treated with approval by the District Secretary. The Local Maintaining Agency shall provide the additional construction funding for the coatings, tints or stains and shall commit to cover the associated maintenance costs for the service life of the structure.

E. Determine the need for sacrificial or non-sacrificial anti-graffiti coatings based on project specific requirements. Use anti-graffiti coatings on the back face of noise or perimeter walls only if the back face of the wall is immediately adjacent to a public or common area.Coordinate the use of anti-graffiti coatings on other structures and/or in other locations with the District Maintenance Office.

F. See also ***SDM*** 4.4 for examples of how to depict surface finish requirements in the plans.

| **Modification for Non-Conventional Projects:** |
| --- |
| Delete ***SDG*** 1.4.5 and see the RFP for requirements. |

## 1.5 EXISTING HAZARDOUS MATERIAL

A. Survey the project to determine if an existing structure contains hazardous materials such as lead-based paint, asbestos-graphite bearing pads, asbestos-cement drain pipes (scuppers), other asbestos-containing materials, etc. Information will be provided by the Department or by site testing to make this determination. Coordinate with the District Asbestos Coordinator for issues relating to asbestos-containing materials.

| **Modification for Non-Conventional Projects:** |
|---|
| Delete first sentence of ***SDG*** 1.5.A and see the RFP for requirements. |

*Commentary: Previous FDOT Standards and Specifications called for the use of lead based paint beneath bearing plates on both steel and concrete bridges and on steel members prior to erection and adjacent concrete placement. This paint has not been removed during subsequent repainting or maintenance operations because it is encapsulated in concrete or is located between faying surfaces.*

*Previous FDOT Standards allowed the use of asbestos-cement (transite) pipes for some bridge deck scuppers. These pipes may exist in some older bridges.*

*If lead based paint or asbestos containing materials exist anywhere on the existing structure, indicate on the plans that the structure contains lead based paint or asbestos containing materials, as appropriate, for the purpose of triggering the protection, or removal and disposal requirements in the Specifications.*

B. When an existing structure has been identified as having hazardous material, develop adequate abatement plans and provisions for worker safety, handling, storage, shipping, and disposal of the hazardous material. If proposed work will disturb identified hazardous materials, include in the project documents, protection, handling, and disposal requirements.

C. When a project involves hazardous materials, the FDOT design project manager will provide assistance in preparing the construction documents and the technical special provisions for handling and disposal of hazardous materials. Use the National Institute of Building Sciences (NIBS) ***Model Guide Specifications for Asbestos Abatement and Management in Buildings*** when developing asbestos abatement plans.

| **Modification for Non-Conventional Projects:** |
|---|
| Delete first sentence of ***SDG*** 1.5.C and see the RFP for requirements. |

D. See also ***PPM*** Volume 1, Section 13.5.2.

# 1.6 POST-INSTALLED ANCHOR SYSTEMS

## 1.6.1 General

A. Post-Installed Anchor Systems are used to attach new construction to structurally sound concrete. Post-Installed Anchor Systems shall be limited to:

   1. Adhesive Bonded Anchor Systems with adhesive bonding material listed on the Department's ***Approved Products List*** (***APL***).
   2. Undercut Anchor Systems as approved on a project-by project basis by the District Structures Design Engineer and the State Structures Design Engineer.

   Design criteria and specific usage limitations for these anchor systems are provided in the following sections.

B. Specify either an Adhesive Bonded Anchor System or an Undercut Anchor System based on the specific usage limitations contained herein, product availability, installation and testing requirements, construction sequence and potential associated traffic control requirements, and all associated costs.

*Commentary: Consider the adhesive bonding material cure time required between installation and field testing of adhesive bonded anchors when developing construction sequence and/or traffic control plans.*

C. For pre-approved adhesive bonding material systems, refer to the ***APL***. Comply with Section 937 of the ***Specifications***. Require that Adhesive Bonded Anchors be installed in accordance with manufacturer's recommendations for hole diameter and hole cleaning technique and meet the requirements of Section 416 of the ***Specifications***.

D. When using Undercut Anchors, the designer must submit a request to the District Specifications Office to use ***Developmental Specifications*** Dev416 and Dev937 for Post-Installed Anchor Systems which includes provisions for both Adhesive Bonded Anchors and Undercut Anchors.

## 1.6.2 Adhesive-Bonded Anchors and Dowels Systems (Rev. 01/17)

A. Adhesive Bonded Anchor Systems consist of adhesive bonding material and steel bar anchors installed in clean, dry holes drilled in hardened concrete. Anchors may be deformed reinforcing bars or threaded rods depending upon the application. Except where specifically permitted by the Structures Manual or Design Standards, do not use Adhesive Bonded Anchor Systems to splice with existing reinforcing bars in either non-prestressed or prestressed concrete applications unless special testing is performed and special, proven construction techniques are utilized.

*Commentary: Installation of Adhesive Anchor Systems in saturated, surface-dry holes; i.e., holes with damp surfaces but with no standing water, is not pre-approved or recommended by the Department. However, in the event such a condition is encountered during construction, the Department may consider approving continued installation, but only on an adjusted, case-by-case basis. The damp hole strength of products on the **APL** has been determined to be approximately 75% of the required dry hole strength.*

B. Adhesive Bonded Anchor Systems meeting the ***Specifications*** and design constraints of this article are permitted only for horizontal, vertical downward, or downwardly inclined installations. Overhead or upwardly inclined installations of Adhesive Bonded Anchors are prohibited. Do not use Adhesive Bonded Anchor Systems for traffic railing anchorages on new construction or other installations with a combination of predominately sustained tension loads and/or lack of structural redundancy. Predominantly sustained tension loads are defined as load combinations where the permanent component of the factored tension load exceeds 30% of the factored tensile resistance for Type HV adhesives. Do not use Adhesive Bonded Anchor Systems in the foundation anchorage of sign, signal or lighting support structures. For prestressed pile splices, refer to Section 455 of the ***Specifications*** for adhesive bonded dowel requirements.

C. Unless special circumstances dictate otherwise, design Adhesive Bonded Anchor Systems for a ductile failure. A ductile failure requires embedment sufficient to ensure that failure will occur by yielding of the steel. In order to produce ductile failure, the following embedments may be assumed:

1. For Anchors in Tension: The embedment length necessary to achieve 125% of the specified yield strength or 100% of the specified tensile strength, whichever is less.
2. For Anchors in Shear: An embedment equal to 70% of the embedment length determined for anchors in tension.

D. In circumstances where ductile failure is not required, the design may be based upon the design strength of either the steel anchor or the adhesive bonding material, whichever is less.

*Commentary: Characteristics to consider when determining when a ductile failure is not required, include:*

1. *The amount of over-strength resistance provided beyond the factored design loads by the anchorage system;*
2. *Potential ductile failure of multiple members within the load path preempting failure of the anchorage system;*
3. *The number of anchors provided that may result in alternative system level redundancy;*
4. *The inherent value of a ductile failure mode to provide advance warning of an impending failure by excessive deflection or redistribution of loads;*
5. *The dominate failure mode, tension, shear or creep.*
6. *36" Single-Slope and 32" F-shape traffic railing retrofits, utilizing reinforcing configurations substantially similar to* ***Design Standards*** *Index 427 and Index 420, respectively, need only meet the design strength of the steel anchor (12 kips and 18.6 kips, respectively), except that the adhesive bonding material strength for the tension reinforcing within three feet of an open joint should meet 125% of the yield strength. This recommendation is based on test results from FHWA/TTI Report No. 05/9-8132-3 (March, 2005).*

E. Use Type HV for the design of Adhesive Bonded Anchors for structural applications. Only use Type HSHV adhesive bond strengths for the design of traffic railing retrofit anchorages where anchors will be installed in the vertical downward position and not subjected to sustained loading.

*Commentary: Type HSHV adhesives are only intended for use in traffic railing retrofit applications where the use of through bolting, undercut anchors or threaded inserts is not practical and the predominant loading is from very short term loading under vehicular impact. The creep test and horizontal installation requirements for accepting Type HSHV and Type HV adhesives are the same, therefore lower bound bond strength (Type HV) shall be used for designs with sustained loading or horizontal installations.*

F. Notation

The following notation is used in this Article:

$\mathbf{A_e}$ = effective tensile stress area of steel anchor (shall be taken as 75% of the gross area for threaded anchors). [in$^2$]

$\mathbf{A_{n0}}$ = $\langle \mathbf{16d} \rangle^2$, effective area of a single Adhesive Anchor in tension; used in calculating $\psi_{\mathbf{gn}}$ (See Figure 1.6.2-1). [in$^2$]

$\mathbf{A_n}$ = effective area of a group of Adhesive Anchors in tension; used in calculating $\psi_{\mathbf{gn}}$, defined as the rectangular area bounded by a perimeter spaced **8d** from the center of the anchors and limited by free edges of concrete (See Figure 1.6.2-1). [in$^2$]

$\mathbf{A_{v0}}$ = $\mathbf{4.5} \langle \mathbf{c}^2 \rangle$, effective breakout area of a single Adhesive Anchor in shear; used in calculating $\psi_{\mathbf{gv}}$ (See Figure 1.6.2-2). [in$^2$]

$\mathbf{A_v}$ = effective area of a group of Adhesive Anchors in shear and/or loaded in shear where the member thickness, **h**, is less than **1.5c** and/or anchor spacing, **s**, is less than **3c**; used in calculating $\psi_{\mathbf{gv}}$ (See Figure 1.6.2-2). [in$^2$]

$\mathbf{c}$ = anchor edge distance from free edge to centerline of the anchor [in]. (must also meet ***SDG*** Table 1.4.2-1 Cover Requirements.)

$\mathbf{d}$ = nominal diameter of Adhesive Anchor. [in]

$\mathbf{f'c}$ = minimum specified concrete strength. [ksi]

$\mathbf{f_y}$ = minimum specified yield strength of Adhesive Anchor steel. [ksi]

$\mathbf{f_u}$ = minimum specified ultimate strength of Adhesive Anchor steel. [ksi]

$\mathbf{h}$ = concrete member thickness. [in]

$\mathbf{h_e}$ = embedment depth of anchor. [in]

$\mathbf{N_c}$ = tensile design strength as controlled by bond for Adhesive Anchors. [kips]

$\mathbf{N_n}$ = nominal tensile strength of Adhesive Anchor. [kips]

$\mathbf{N_o}$ = nominal tensile strength as controlled by concrete embedment for a single Adhesive Anchor. [kips]

$\mathbf{N_s}$ = design strength as controlled by Adhesive Anchor steel. [kips]

$\mathbf{N_u}$ = factored tension load. [kips]

$\mathbf{s}$ = Adhesive Anchor spacing (measured from centerlines of anchors). [in]

$\psi_m$ = Strength modification factor for Adhesive Anchor with compressive reaction within the nominal breakout cone effective area (1.0 when $\mathbf{z} \geq \mathbf{1.5h}$).

$\mathbf{z}$ = Internal lever arm for restrained concrete breakout calculated in accordance with the theory of elasticity.

When using Type HSHV adhesives, the minimum anchor spacing is **12d**.

*Commentary: The use of higher bond strengths with close anchor spacing can potentially result in concrete breakout failure under tensile loading that may not be accounted for in the current equations. A check of the concrete breakout strength for groups of anchors in accordance with ACI 318 Appendix D, would provide a conservative concrete capacity under tensile loading and justification of closer anchor spacing for HSHV adhesives.*

$\mathbf{V_c}$ = shear design strength as controlled by the concrete embedment for Adhesive Anchors. [kips]

$\mathbf{V_s}$ = design shear strength as controlled by Adhesive Anchor steel. [kips]

$\mathbf{V_u}$ = factored shear load. [kips]

$\mathbf{T'}$ = 1.08 ksi nominal bond strength for general use products on the ***APL*** (Type V and Type HV). 1.83 ksi nominal bond strength for Type HSHV adhesive products on the ***APL*** for traffic railing barrier retrofits only.

$\phi_c$ = 0.85, capacity reduction factor for adhesive anchor controlled by the concrete embedment ($\phi_c$ =1.00 for extreme event load case)

$\phi_s$ = 0.90, capacity reduction factor for adhesive anchor controlled by anchor steel.

$\psi_e$ = modification factor, for strength in tension, to account for anchor edge distance less than **8d** (1.0 when $\mathbf{c} \geq \mathbf{8d}$).

$\psi_{gn}$ = strength reduction factor for Adhesive Anchor groups in tension (1.0 when $s \geq 16d$).

$\psi_{gv}$ = strength reduction factor for Adhesive Anchor groups in shear and single Adhesive Anchors in shear influenced by member thickness (1.0 when $s \geq 3.0c$ and $h \geq 1.5c$).

G. Design Requirements for Tensile Loading

Use Equation 1-2 to determine the design tensile strength for Adhesive Anchor steel:

$$\phi N_s = \phi_s A_e f_y \qquad \text{[Eq. 1-2]}$$

Use Equation 1-3 to determine the design tensile strength for Adhesive Anchor bond:

$$\phi N_c = \phi_c \psi_e \psi_{gn} \psi_m N_o \qquad \text{[Eq. 1-3]}$$

Where:

$$N_o = T' \pi d h_e \qquad \text{[Eq. 1-4]}$$

For anchors with a distance to a free edge of concrete less than **8d**, but greater than or equal to **3d**, a reduction factor, $\psi_e$, as given by Equation 1-5 must be used. For anchors located less than **3d** from a free edge of concrete, an appropriate strength reduction factor must be determined by special testing. For anchors with an edge distance greater than **8d**, $\psi_e$ shall be taken as 1.0. Edge distance for all anchors must also meet ***SDG*** Table 1.4.2-1 Cover Requirements.

$$\psi_e = 0.70 + 0.30(c/8d) \qquad \text{[Eq. 1-5]}$$

For anchors loaded in tension and spaced closer than **16d**, a reduction factor, $\psi_{gn}$, given by Equation 1-6 must be used. For anchor spacing greater than **16d**, $\psi_{gn}$ must be taken as 1.0.

$$\psi_{gn} = (A_n / A_{no}) \qquad \text{[Eq. 1-6]}$$

For anchors loaded in tension where a compressive restraint or reaction is provided within the projected concrete breakout area, the modification factor $\psi_m$, given by Equation 1-6a may be used. For anchors where **c < 8d**, and the compressive reaction is not located between the anchor and the free edge of the concrete, the effects of this modification factor should be neglected.

$$\psi_m = 2.5/(1 + z/h_e) \qquad \text{[Eq. 1-6a]}$$

H. Design Requirements for Shear Loading

1. Adhesive Anchors loaded in shear must be embedded not less than 6d with an edge distance not less than the greater of 3d or that distance required to meet the concrete cover requirements of ***SDG*** Table 1.4.2-1.

2. For Adhesive Anchors loaded in shear, the design shear strength controlled by anchor steel is determined by Equation 1-7:

$$\phi V_s = \phi_s \, 0.7 \, A_e f_y \qquad \text{[Eq. 1-7]}$$

3. For Adhesive Anchors loaded in shear, the design shear strength controlled by concrete breakout for shear directed toward a free edge of concrete is determined by Equation 1-8:

$$\phi V_c = \phi_c \psi_{gv} \, 0.4534 \, c^{1.5} \sqrt{f'c} \qquad \text{[Eq. 1-8]}$$

4. For anchors spaced closer than **3.0c** and/or member thickness less than **1.5c**, a reduction factor, $\psi_{gv}$, given by Equation 1-9 must be used. For anchor spacing greater than **3.0c** with member thickness greater than **1.5c**, $\psi_{gv}$ must be taken as 1.0.

$$\psi_{gv} = A_v / A_{vo} \qquad \text{[Eq. 1-9]}$$

I. Interaction of Tensile and Shear Loadings

1. The following linear interaction between tension and shear loadings given by Equation 1-10 must be used unless special testing is performed:

$$(N_u / \phi N_n) + (V_u / \phi V_n) \leq 1.0 \qquad \text{[Eq. 1-10]}$$

2. In Equation 1-10, $\phi N_n$ is the smaller of the design tensile strength controlled by the Adhesive Anchor steel (Equation 1-2) or the design tensile strength as controlled by Adhesive Anchor bond (Equation 1-3). $\phi V_n$ is the smaller of the design shear strength controlled by the Adhesive Anchor steel (Equation 1-7) or the design shear strength as controlled by concrete breakout (Equation 1-8).

*Commentary: If Adhesive Anchor Systems are required to act as dowels from existing concrete components such that the existing reinforcing steel remains fully effective over its length, then the Adhesive Anchor System must be installed to a depth equal to the development length of the existing reinforcing steel. In this case, the required reinforcing steel spacing, covers, etc. apply to both the existing reinforcing steel and the Adhesive Anchor System. There is, however, no additional benefit to the Adhesive Anchor System to install anchors to a greater depth than required by this Article.*

See Figure 1.6.2-1 Effective Tensile Stress Areas of Adhesive Anchors.

See Figure 1.6.2-2 Effective Shear Stress Areas of Adhesive Anchors.

Click to download a Mathcad program Adhesive Anchor v1.01.

Click to view Adhesive Bonded Anchor Design Examples.

## Figure 1.6.2-1 Effective Tensile Stress Areas of Adhesive Anchors

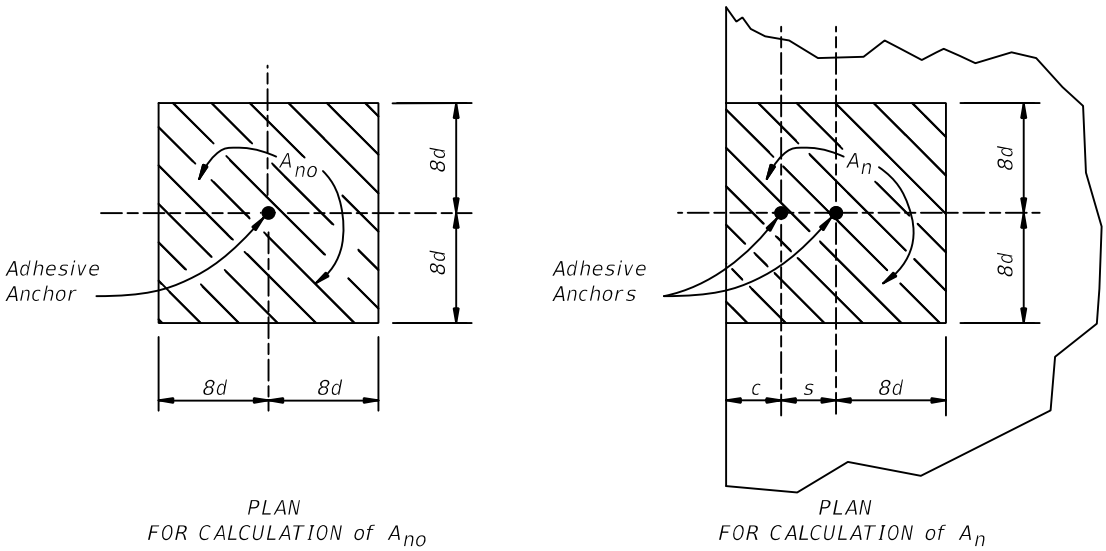


EFFECTIVE TENSILE STRESS AREAS
OF ADHESIVE ANCHORS

## Figure 1.6.2-2 Effective Shear Stress Areas of Adhesive Anchors

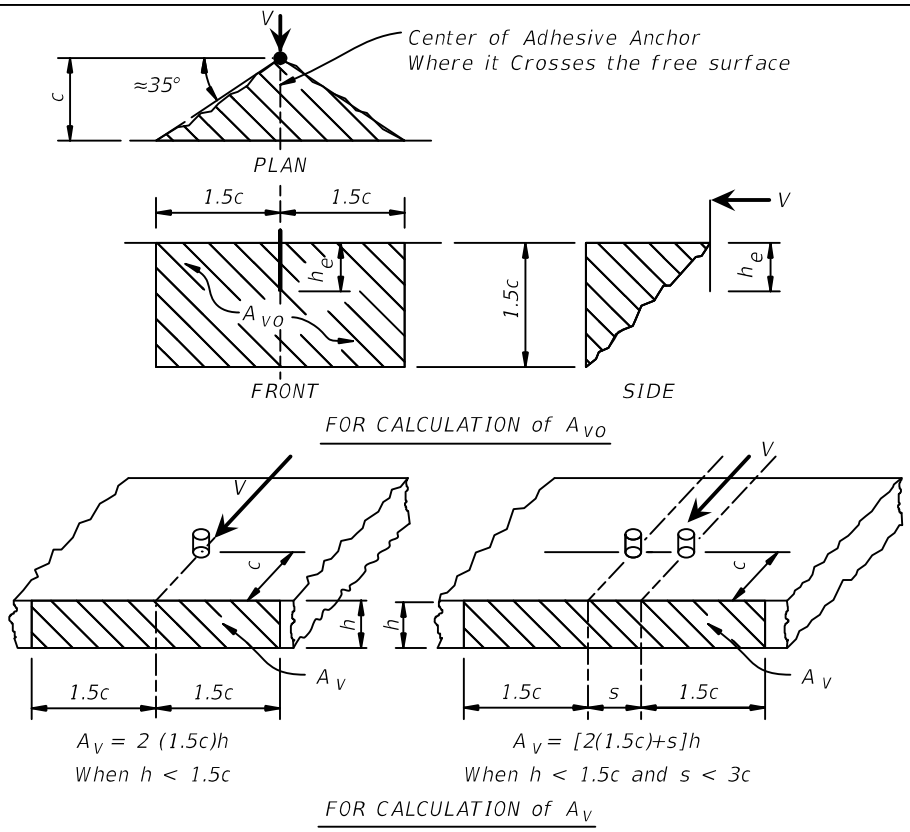


EFFECTIVE SHEAR STRESS AREAS
OF ADHESIVE ANCHORS

### 1.6.3 Undercut Anchor Systems (Rev. 01/17)

A. Undercut Anchors are primarily intended for overhead applications and applications with predominately sustained tension loads where Adhesive Bonded Anchors are precluded. They may be used for traffic railing anchorages on new construction and other applications in lieu of Adhesive Bonded Anchors where appropriate and applicable.

B. EOR's Design Criteria

1. Use the following criteria for providing factored design load(s), bolt diameter, embedment depth and anchor configuration in the plans for each Undercut Anchor location.
2. Contact the State Structures Design Engineer for additional design guidance.
3. Design Undercut Anchors in accordance with ACI 318, Appendix D, Current Edition, using the product data provided by the ACI 355.2 product evaluation report.

*Commentary: A Mathcad based Undercut Anchor Design Program following ACI 318 Appendix D is available from the State Structures Design Engineer by request.*

4. Do not account for supplementary reinforcement at potential concrete failure surfaces in any structural member receiving an Undercut Anchor (Condition B per ACI 318, Appendix D).
5. Use only Category 1 Undercut Anchor Systems as defined in ACI 318, Chapter 17.
6. Use only undercut anchor systems qualified for use in cracked concrete. Use the effectiveness factor for cracked concrete ($k_c$ or $k_{cr}$) as taken from the ACI 355.2 product evaluation report.

## 1.7 LOAD RATING

A. When load rating structures, perform a ***LRFR*** load rating analysis as defined in the ***AASHTO Manual for Bridge Evaluation (MBE)***, Section 6, Part A and as modified by the Department's Bridge Load Rating Manual. See ***SDG*** Figure 7.1.1-1 for widenings and rehabilitations.

B. Include the load rating calculations with the 90% submittals and attach the completed Bridge Load Rating Summary Detail Sheet and the Load Rating Summary Form.

| **Modification for Non-Conventional Projects:** |
|---|
| Delete ***SDG*** 1.7.B and substitute the following:<br>B. Include the load rating calculations with the 90% superstructure component submittals and attach the completed Bridge Load Rating Summary Detail Sheet and the Load Rating Summary Form. |

## 1.8 POST-DESIGN SERVICES

A. The ***Construction Project Administration Manual (CPAM)*** contains instructions needed to complete the administrative portion of Department of Transportation construction contracts. It is designed to give details to Department representatives for administering items mandated in Florida Statutes, rules and/or contract specifications and for the successful completion of construction contracts. The ***CPAM*** ensures consistency in carrying out Department of Transportation policies and helps ensure that all construction contracts are successfully administered on a fair and equal basis.

B. When responding to "Request for Information" (RFI), "Request for Modification" (RFM), and "Request For Corrections" (RFC), refer to ***CPAM*** 8.11 and ***CPAM*** 10.10 for Engineer of Record's responsibilities and required Department involvement. Project related questions that arise during construction that are not covered by specific Department policies or Contract Documents, contact appropriate Department personnel for input and concurrence.

*Commentary: The reason for getting Department input is to avoid setting unwanted precedence, to ensure uniformity between projects and Districts and to provide a mechanism for policy feedback.*

| **Modification for Non-Conventional Projects:** |
| --- |
| Delete ***SDG*** 1.8 and see ***CPAM***. |

## 1.9 MISCELLANEOUS ATTACHMENTS TO BRIDGES (Rev. 01/17)

A. Miscellaneous attachments include but are not limited to signs, lights, traffic signals, conduits, drain pipes, utilities and other similar non-standardized items.

B. Design and detail miscellaneous attachments to bridges using the allowable connection types shown in Appendix 1A and show the details in the plans. Click the link or image below to view Appendix 1A. See also ***SDG*** 1.6 for specific requirements related to post-installed anchor systems.

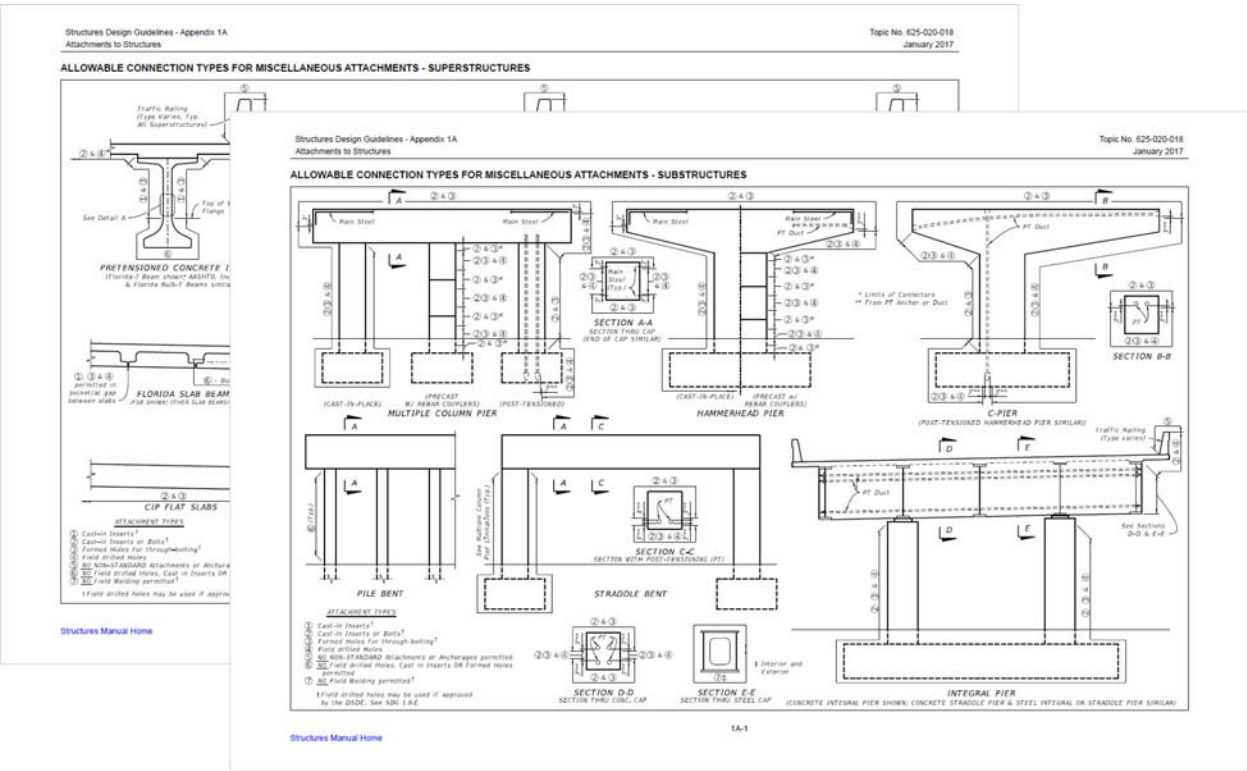


C. Coordinate locations and attachment details with other disciplines in accordance with ***PPM*** Volume 1, Chapter 4. Coordinate utilities accommodation with the District Utilities Engineer.

D. Attach supports for sign structures and other similar miscellaneous items to the back face of New Jersey Shape, F-Shape, Vertical Face and structurally continuous Post and Beam outside shoulder traffic railings using the details shown in Figure 1.9-1. See also ***PPM*** Volume 1, Chapter 4 for additional requirements. Contact the Structures Design Office for guidance when attaching supports to all other traffic railing types. Do not attach supports to traffic railings within 5 feet of an open joint in the railing. Check the capacity of the traffic railing and the deck at the support location using the Strength III, Service I and Extreme Event II load combinations. Although intended for use with the outside shoulder traffic railing types listed, the details presented in Figure 1.9-1 can also be used for attaching items to concrete pedestrian railings.

## Figure 1.9-1 Special Details for Attaching Miscellaneous Items to Traffic Railings

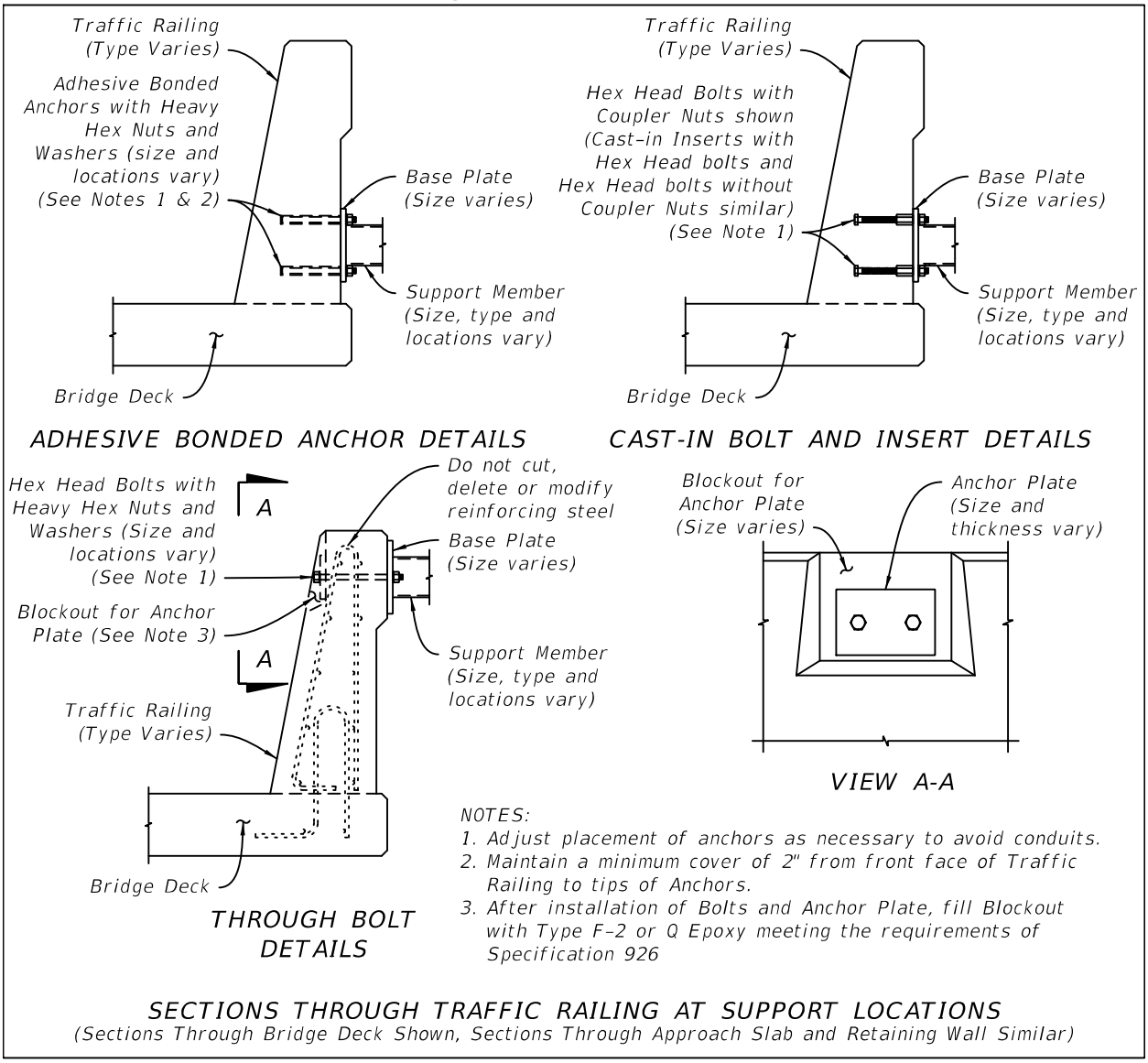


E. When field drilling of existing structures at locations shown in Appendix 1A is permitted by the DSDE, include plan notes and/or develop Technical Special Provisions to address special requirements, e.g. locating reinforcing steel, prestressing steel and/or post-tensioning tendons in existing concrete structures prior to field drilling, drilling into any steel members, etc.

## 1.10 LIMITATIONS ON BRIDGE SKEW ANGLE

The maximum allowable skew angle at bridge supports shall be limited to 50° unless otherwise required by geometric constraints such as when supports have to be placed within narrow skewed medians of underlying roadways. In no case shall the skew angle be greater than 60° unless approved by the Structures Design Office.

| **Modification for Non-Conventional Projects:** |
| --- |
| Delete the last sentence of ***SDG*** 1.10 and replace with the following:<br>In no case shall the skew angle be greater than 60° unless otherwise stated in the RFP. |

## 1.11 POST-TENSIONING [5]

### 1.11.1 General (Rev. 01/17)

A. Design and detail post-tensioned structures in accordance with the requirements of ***LRFD*** as modified by this section and the ***Design Standards*** using post-tensioning systems that meet the requirements of the ***Specifications***.

B. Design and detail all tendons that utilize flexible filler to be unbonded, fully replaceable, meet anchorage clearance requirements of ***SDG*** Table 1.11.1-1, and have clearance at the anchorages for jacking and future tendon replacement operations. Prior approval from the SDO is required for the following cases:

1. Design for replaceable tendons that requires complete or partial removal of deck or diaphragm concrete.
2. Stressing end anchorages located in locations that require demolition to replace tendons.
3. Anchorage blisters on the exterior face of a fascia I-beam or girder other than as shown in ***SDM*** Figure 23.7-1 and ***SDM*** Figure 23.7-2, on the exterior of a U-beam or girder, or on the exterior of a box girder.

## Table 1.11.1-1 Minimum Clearance Requirements at Anchorages for Replaceable Strand and Wire Tendons

| Anchorage Type and Location | Minimum Clearance Requirement | Example Detail |
|---|---|---|
| Stressing End Anchorage Near Deviator | Dimension B[1] | ***SDM*** Figure 20.8-1 |
| Stressing End Anchorage at Intermediate Diaphragm Near Minor Obstruction[2] | Dimension A[1] + 1'-0" (min.) | ***SDM*** Figure 20.8-2 |
| Non-Stressing End Anchorage Near Abutment | 2'-6" + $\Delta_T$<br>$\Delta_T$ = Maximum Design Thermal Expansion | ***SDM*** Figure 20.8-3<br>***SDM*** Figure 23.7-3 |
| Non-Stressing End Near Other Structure | 2'-6" + $\sum\Delta_T$<br>$\sum\Delta_T$ = Summation of Maximum Design Thermal Expansion of both adjacent structures | ***SDM*** Figure 20.8-4<br>***SDM*** Figure 23.7-4 |
| Stressing End Anchorage at Other Locations | Dimension A[1] + $\Delta_T$ (if applicable) + sufficient clearance for pulling existing tendon and installation of new tendon (Prior SDO approval is required to use this approach at locations other than webs of I-girders as shown in ***SDM*** Figures 23.7-1 and 23.7-2) | ***SDM*** Figure 23.7-1<br>***SDM*** Figure 23.7-2 |
| Non-Stressing End Anchorage at Other Locations | 2'-6" + $\Delta_T$ (if applicable) | - |

1. See ***SDG*** Figure 1.11.1-1 and ***SDG*** Table 1.11.1-2.
2. A minor obstruction is a bridge component or projection that does not impede future tendon replacement operations.

*Commentary: In general, permanent strand tail extensions will not be required for replaceable tendons. The use of non-stressing ends of tendons located at bridge end diaphragms is desirable due to reduced clearance requirements at the anchorages. Visible anchorage blisters, such as web blisters, are generally not desirable for aesthetic reasons. Anchorages embedded within a thickened web section that are not visibly distinct are preferred (see **SDM** Figure 23.7-1 and **SDM** Figure 23.7-2).*

## Figure 1.11.1-1 Jack Envelope Dimensions for Design and Detailing

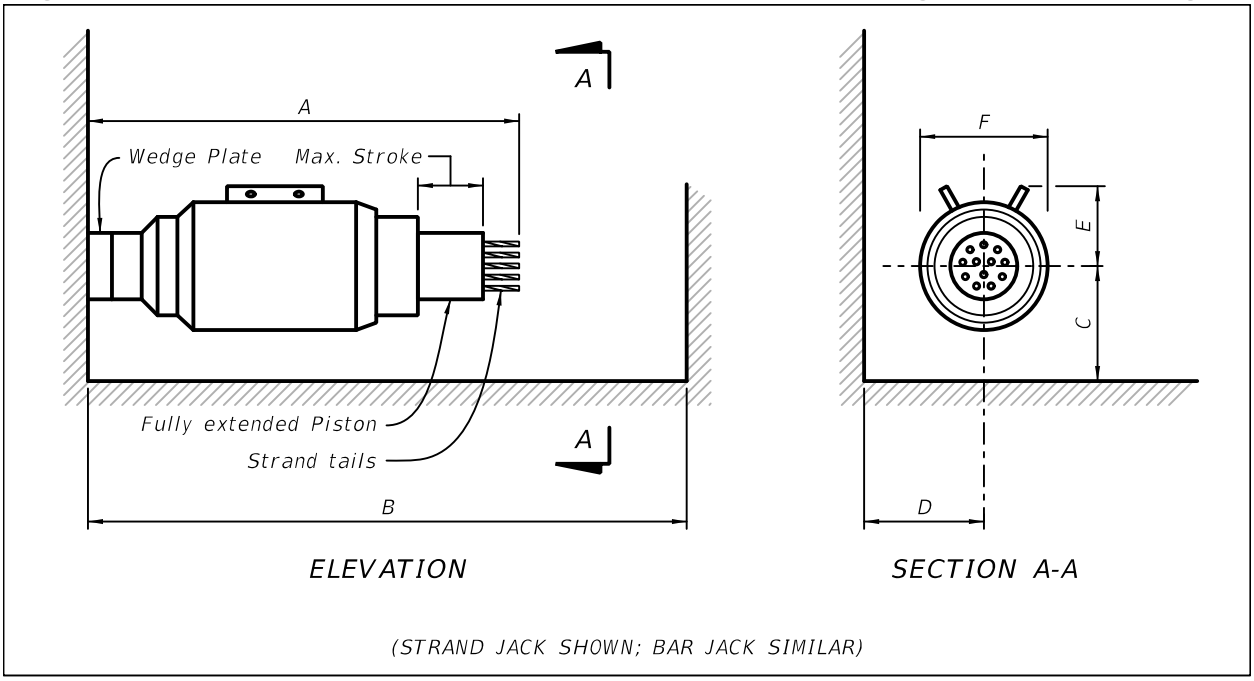


## Table 1.11.1-2 Jack Envelope Dimensions for Design and Detailing

| Tendon Size & Type | Jack Envelope Dimensions (in) | | | | | |
|---|---|---|---|---|---|---|
| | A | B[1] | C | D | E | F |
| 4 - 0.6 Strands | 50 | 86 | 15 | 15 | 17 | 11 |
| 7 - 0.6 Strands | 51 | 92 | 15 | 15 | 17 | 15 |
| 12 - 0.6 Strands | 51 | 92 | 15 | 15 | 14 | 15 |
| 15 - 0.6 Strands | 60 | 120 | 15 | 15 | 21 | 19 |
| 19 - 0.6 Strands | 60 | 120 | 15 | 15 | 17 | 19 |
| 27 - 0.6 Strands | 60 | 120 | 15 | 15 | 19 | 24 |
| 31 - 0.6 Strands | 60 | 120 | 18 | 18 | 19 | 25 |
| 1" Diameter Bar | 42 | 72 | 15 | 15 | 10 | 11 |
| 1-1/4" Diameter Bar | 43 | 72 | 15 | 15 | 10 | 11 |
| 1-3/8" Diameter Bar | 43 | 72 | 15 | 15 | 10 | 11 |
| 1-3/4" Diameter Bar | 51 | 92 | 15 | 15 | 12 | 15 |
| 2-1/2" Diameter Bar | 56 | 92 | 15 | 15 | 13 | 16 |
| 3" Diameter Bar | 60 | 120 | 15 | 15 | 17 | 19 |

1. See ***SDG*** Table 1.11.1-1 for required dimension for Tendons with Flexible Filler.

C. Design and detail strand tendons in a manner that will accommodate competitive systems using standard anchorage sizes and jack envelope dimensions for 4, 7, 12, 15, 19, 27 and 31 - 0.6" diameter strand tendons. Design tendons with intermediate numbers of strands using the next largest size anchorage, e.g., a 17 strand tendon can be used if the anchorage zones can accommodate a 19 strand tendon anchorage. See the Approved Post Tensioning Systems website for more information. Strand couplers as described in ***LRFD*** [5.4.5] are not allowed. Strand anchorages cast into concrete structures are not allowed. See Figure 1.11.1-1 and Table 1.11.1-2 for jack envelope dimensions.

D. Design and detail bar tendons in a manner that will accommodate competitive systems using 1", 1¼", 1⅜", 1¾", 2½" and 3" diameter deformed bars and associated jack envelope dimensions. See the Approved Post Tensioning Systems website for more information. See Figure 1.11.1-1 and Table 1.11.1-2 for jack envelope dimensions.

E. Design and detail parallel wire tendons in a manner that will accommodate competitive systems. See the Approved Post Tensioning Systems website for more information. Parallel wire couplers as described in ***LRFD*** [5.4.5] are not allowed. Parallel wire anchorages cast into concrete structures are not allowed.

**Modification for Non-Conventional Projects:**

Delete ***SDG*** 1.11.1.C, D and E and insert the following:

C. Design and detail strand tendons using the selected post-tensioning supplier's standard anchorage sizes and jack envelope dimensions for 4, 7, 12, 15, 19, 27 and 31 - 0.6" diameter strand tendons. Design tendons with intermediate numbers of strands using the next largest size anchorage, e.g., a 17 strand tendon can be used if the anchorage zones can accommodate a 19 strand tendon anchorage. See the Approved Post Tensioning Systems website for more information. Strand couplers as described in ***LRFD*** [5.4.5] are not allowed. Strand anchorages cast into concrete structures are not allowed.

D. Design and detail bar tendons using the selected post-tensioning supplier's 1", 1¼", 1⅜", 1¾", 2½" and 3" diameter deformed bars and associated anchorages and jack envelope dimensions. See the Approved Post Tensioning Systems website for more information.

E. Design and detail parallel wire tendons using the selected post-tensioning supplier's standard anchorage sizes for the selected tendon size. See the Approved Post Tensioning Systems website for more information. Parallel wire couplers as described in ***LRFD*** [5.4.5] are not allowed. Parallel wire anchorages cast into concrete structures are not allowed.

F. Design and detail joints between precast elements using one of the following methods. Dry joints are not allowed.

1. Use match-cast precast elements with a segmental epoxy bonding system that meets the requirements of ***Specifications*** Section 453 applied to both faces of adjacent precast elements.

*Commentary: Match-cast precast elements with a segmental epoxy bonding system are used for precast balanced cantilever and span by span superstructures, and may be used for precast pier columns.*

2. Use cast-in-place reinforced closure pours a minimum of 18 inches wide between adjacent precast elements.

*Commentary: Closure pours are typically used in precast balanced cantilever construction between the tips of cantilevers, and at end spans in precast balanced cantilever construction between the tip of the cantilever and adjacent precast segments erected on falsework.*

3. Use grouted joints a maximum of 6" wide between adjacent precast elements.

*Commentary: Grouted joints are typically used between a pier segment and the adjacent segment in span by span construction with external tendons, and between adjacent pier column segments or a footing and pier column segment in piers with external tendons.*

## 1.11.2 Corrosion Protection (Rev. 01/17)

A. Include the following corrosion protection strategies in the design and detailing of post-tensioned structures:

1. Completely sealed ducts and permanent anchorage caps
2. Ducts and anchorage caps completely filled with approved filler
3. Multi-level anchorage protection
4. Watertight bridges
5. Multiple tendon paths

B. Three levels of protection are required for strand, wire, and bar tendons as follows:

1. Within a concrete element:
   a. Internal Tendons
      i. Concrete cover
      ii. Polypropylene or polyethylene duct and couplers
      iii. Complete filling of the duct with grout or flexible filler
   b. External Tendons
      i. Hollow box structure itself
      ii. Polyethylene duct and approved couplers
      iii. Complete filling of the duct with flexible filler

2. At the segment face or construction joint (Internal and External Tendons):
   a. Epoxy seal (precast construction) or wet cast joint (cast-in-place construction)
   b. Continuity of the duct and/or duct coupler
   c. Complete filling of the duct with grout or flexible filler

C. External tendons are not permitted for use with I-beam or girder superstructures except for repair, retrofit or strengthening scenarios.

D. Four levels of protection are required for anchorages on interior surfaces, e.g. at interior diaphragms or along the bottom slab in box girder bridges, within hollow pier columns, etc., as follows:

1. Grout or flexible filler within anchorage cap
2. Permanent anchorage cap
3. Elastomeric seal coat
4. Concrete box structure

E. Four levels of protection are required for anchorages on exterior surfaces, e.g. tops and ends of pier caps, at end diaphragms/expansion joints in box girder bridges, at diaphragms or along the deck in I-girder bridges, etc., as follows:

1. Grout or flexible filler within anchorage cap
2. Permanent anchorage cap
3. Encapsulating pour-back
4. Seal coat (Elastomeric seal coat on non-riding surfaces; Methyl Methacrylate on riding/top of deck surfaces)

F. See ***Design Standards*** Index 21802 and ***Instructions for Design Standards*** Index 21800 Series for additional anchorage protection requirements and details.

G. Deck overlays are not considered a level of protection for tendons or anchorages.

H. Temporary internal post-tensioning bars used for erection with acceptable ducts, cover, and filler material may remain in the structure with no additional protection required. Do not incorporate the force effects from these bars in the service stress or strength calculations for the structure except in cases where the effects are detrimental.

### 1.11.3 Design Values (Rev. 01/17)

Use the following values for the design of post-tensioned members.

A. Concrete strengths (f'c):

| | |
|---|---|
| Precast components | 5.5 ksi min., 10.0 ksi max. |
| Closure pours and joints | 5.5 ksi min., 6.5 ksi max. |
| Cast-in-place components | 5.0 ksi min., 6.5 ksi max. |

See ***SDG*** 1.4.3 for additional requirements.

B. Post-Tensioning Steel:

| | |
|---|---|
| Strand | ASTM A416, Grade 270, low relaxation, 0.6 inch diameter |
| Parallel wires | ASTM A421, Grade 240 |
| Bars | ASTM A722, Grade 150, Type II |

C. Anchor set:

| | |
|---|---|
| Strand | 3/8-inch |
| Parallel wires | 1/2-inch |
| Bars | 1/16-inch |

D. Wobble coefficient (K) and Coefficient of friction (μ):

| Type of Steel | Type of Duct | K | μ |
|---|---|---|---|
| Wire or Strand | Corrugated plastic duct | 0.0002 | 0.14 |
| | Smooth plastic pipe | 0.0 | 0.14 |
| | Smooth steel pipe | 0.0 | 0.30 |
| Bar, Deformed, Smooth and Round | Corrugated plastic duct | 0.0002 | 0.30 |
| | Smooth plastic pipe | 0.0 | 0.30 |
| | Smooth steel pipe | 0.0 | 0.30 |

## 1.11.4 Ducts (Rev. 01/17)

A. Design and detail using smooth wall polyethylene (PE) duct and/or steel pipe and associated couplers that meet the requirements of ***Specifications*** Section 960 for all external tendons, and for internal tendons with flexible filler. Specify the use of steel pipe where PE duct cannot be used due to minimum bending radius limitations.

B. Design and detail using corrugated polypropylene (PP) duct and/or steel pipe and associated couplers that meet the requirements of ***Specifications*** Section 960 for grouted internal tendons. Specify the use of steel pipe where PP duct cannot be used due to minimum bending radius limitations.

C. Design and detail using the maximum duct external dimensions shown in Table 1.11.4-1 for laying out tendon geometries and checking for clearances and required concrete cover in post-tensioned members.

**Modification for Non-Conventional Projects:**

Delete ***SDG*** 1.11.4.C and insert the following:

C. Design and detail using project specific maximum duct external dimensions for laying out tendon geometries and checking for clearances and required concrete cover in post-tensioned members.

## Table 1.11.4-1 Maximum Duct External Dimensions for Detailing

| Tendon Size and Type | Corrugated Duct Outside Diameter | | Smooth Wall Duct Outside Diameter | |
|---|---|---|---|---|
| | For use with Strand and Wire Tendons, and Bar Tendons without Couplers | For use with Bar Tendons with Couplers[1] | For use with Strand and Wire Tendons, and Bar Tendons without Couplers | For use with Bar Tendons with Couplers[1] |
| 4 - 0.6 strands | 1.54" x 3.55" (Flat duct) | N/A | 3.50" | N/A |
| 7 - 0.6 strands | 2.87" | N/A | 3.50" | N/A |
| 12 - 0.6 strands | 3.63" | N/A | 3.50" | N/A |
| 15 - 0.6 strands | 3.95" | N/A | 4.50" | N/A |
| 19 - 0.6 strands | 4.57" | N/A | 4.50" | N/A |
| 27 - 0.6 strands | 5.30" | N/A | 5.563" | N/A |
| 31 - 0.6 strands | 5.95" | N/A | 5.563" | N/A |
| 1" diameter bar | 2.87" | 4.09" | 3.50" | 3.50" |
| 1¼" diameter bar | 2.87" | 4.09" | 3.50" | 3.50" |
| 1⅜" diameter bar | 2.87" | 4.09" | 3.50" | 3.50" |
| 1¾" diameter bar | 3.63" | 4.57" | 3.50" | 4.50" |
| 2½" diameter bar | 3.95" | 5.95" | 4.50" | 5.563" |
| 3" diameter bar | 4.57" | 7.00" | 4.50" | 6.625" |

1. Use duct dimensions as shown for bar tendons with couplers:
   a. For the full length of the bar tendon if its length exceeds 45 feet (including the length of bar needed for stressing and anchoring) and coupler locations are not known, or cannot be designed for and specified in the Plans.
   b. For a minimum distance of 3 times the coupler length at specified coupler locations, e.g. for bar tendons used in precast segmental piers and vertical bar tendons in C-piers that extend from the footings, through the columns and into the caps.

**Modification for Non-Conventional Projects:**

Delete ***SDG*** Table 1.11.4-1 and use the appropriate maximum duct external dimensions from the selected post-tensioning system. Accommodate the use of bar tendon couplers as required.

D. Specify duct geometry in the plans measured to the centerline of the duct. Design ducts to meet or exceed the minimum duct radii and tangent lengths shown in Table 1.11.4-2. For ducts that follow circular curvature or combinations of tangent and circular curvature, show radii and dimensions to points of curvature and tangency (PC and PT points). For ducts that follow parabolic curvature or combinations of tangent and parabolic curvature, show offset dimensions from fixed surfaces, e.g. the bottom of the beam, or clearly defined reference lines at intervals not exceeding 3 feet. For ducts that deviate in both the vertical and horizontal planes, show the required dimensions in elevation and plan views, respectively.

## Table 1.11.4-2 Minimum Duct Radius and Tangent Length

| Tendon Size | Minimum Duct Radius Between Two Tangents (ft) | Minimum Duct Radius and Tangent Length Adjacent to Anchorages (see Figure 1.11.4-1) | |
|---|---|---|---|
| | | Minimum Radius R (ft) | Minimum Tangent Length L (ft) |
| 4 - 0.6" diameter strands | 6 | 9 | 2 |
| 7 - 0.6" diameter strands | 6 | 9 | 3 |
| 12 - 0.6" diameter strands | 8 | 11 | 3 |
| 15 - 0.6" diameter strands | 9 | 12 | 3 |
| 19 - 0.6" diameter strands | 10 | 13 | 3 |
| 27 - 0.6" diameter strands | 13 | 16 | 3.5 |
| 31 - 0.6" diameter strands | 13 | 16 | 3.5 |

## Figure 1.11.4-1 Minimum Duct Radius and Tangent Length Adjacent to Anchorages

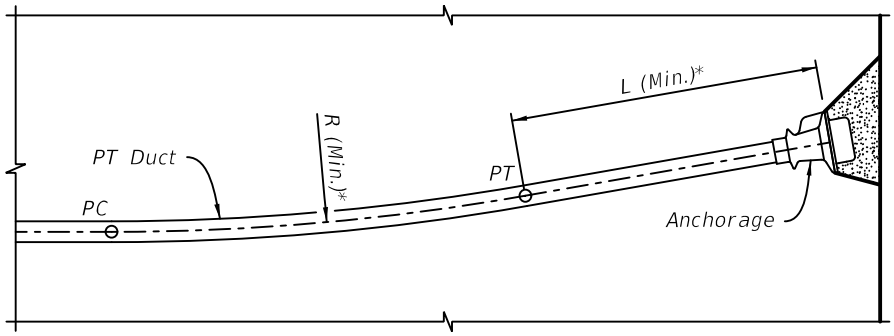


NOTE: Internal tendon shown, external tendon similar.

* See Table 1.11.4-2

E. Design and detail ducts for external tendons as follows:

1. Design and detail duct geometry using circular Diabolos at the faces of all pier diaphragms, deviators, and blisters without anchorages. See ***SDM*** Figure 20.8-10 for Diabolo details.
2. At pier diaphragms with anchorages and at blisters without anchorages, design and detail using ducts that are embedded in the concrete and not removable as shown in ***SDM*** Figure 20.8-5, ***SDM*** Figure 20.8-6 and ***SDM*** Figure 20.8-7.
3. At pier diaphragms without anchorages and at deviators, design and detail using smooth round formed holes and completely removable ducts that are external to the concrete as shown in ***SDM*** Figure 20.8-8 and ***SDM*** Figure 20.8-9.
4. To allow room for the installation of duct couplers, design and detail all external tendons to provide a 1½-inch clearance between the outer duct surface and the adjacent face of the concrete as shown in ***SDM*** Figure 20.8-9.

F. Design and detail using segmental duct couplers for all internal tendon ducts at all joints between precast elements. Lay out internal tendon ducts with segmental duct couplers as shown in Figure 1.11.4-2.

## Figure 1.11.4-2 Layout of Internal Tendons with Segmental Duct Couplers

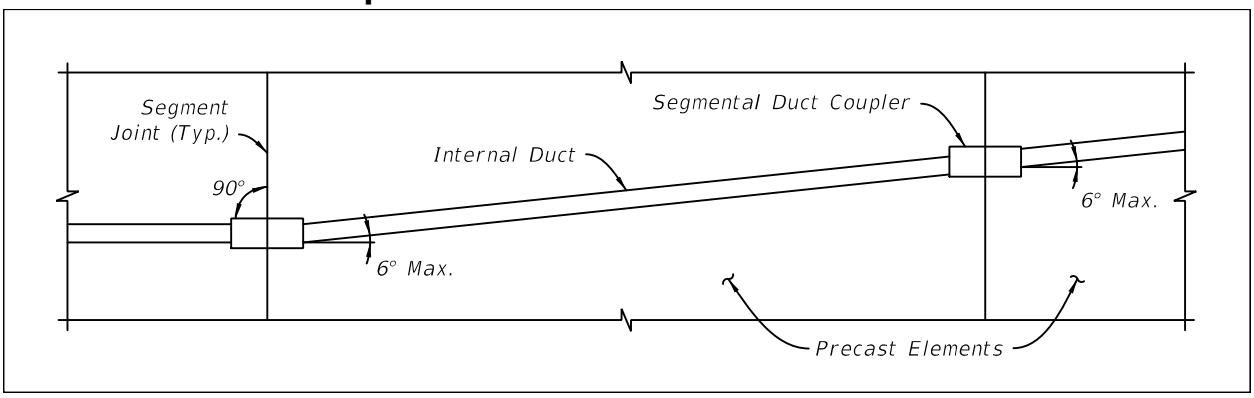


*Commentary: Segmental duct couplers shall be made normal to joints to allow stripping of the bulkhead forms. Theoretically, the tendon must pass through the coupler without touching the duct or coupler. Over-sizing couplers allows for standardized bulkheads and avoids the use of curved tendons.*

G. Refer to the list of Approved Post Tensioning Systems for additional details and dimensions of other post-tensioning hardware components.

## 1.11.5 Tendon Design (Rev. 01/17)

A. Design and detail all tendons to be unbonded except those listed in Paragraphs B and C below. For unbonded tendons, specify the use of flexible filler in the ***Design Standards*** Index 21800 Series data tables and include the data tables in the Plans.

B. Design and detail the following internal strand tendons with predominantly flat geometries to be bonded:

1. Top slab cantilever longitudinal tendons in segmental box girders
2. Top slab transverse tendons in segmental box girders
3. Tendons that are draped 2'-0" or less in post-tensioned slab type superstructures

For bonded tendons, specify the use of grout in the ***Design Standards*** Index 21800 Series data tables and include the data tables in the Plans.

C. Design and detail the following tendons to be bonded or unbonded:

1. Straight strand or parallel wire tendons in U-beams and girders
2. Bar tendons (predominately vertical or horizontal)

For these tendons, specify the use of grout for bonded designs or flexible filler for unbonded designs in the ***Design Standards*** Index 21800 Series data tables and include the data tables in the Plans.

D. Design and detail all other tendon types for which grout is not specifically required or allowed as unbonded. For these tendons, specify the use of flexible filler in the ***Design Standards*** Index 21800 Series data tables and include the data tables in the Plans.

E. Design for shear and torsion as follows:

1. For segmental bridges using bonded and/or unbonded tendons, use ***LRFD*** [5.8.6], and [5.8.3.5]. The General Procedure for determining shear and torsion design according to ***LRFD*** [5.8.3.4.2] is also permitted for segmental bridges where the maximum value of the nominal shear resistance ($V_n$) of the section is as follows:

$$\mathbf{V_n \leq 0.15 \times f'_c \times b_v \times d_v} \text{ or } \mathbf{0.379 \times \sqrt{f'_c} \times b_v \times d_v}\text{, whichever is greater}$$

Principal stresses in the webs shall be checked using [5.8.5] for both methods.

2. For other types of structures using bonded and/or unbonded tendons, use ***LRFD*** [5.8.3.4.2].

F. Use ***LRFD*** [5.7.3.1.2] for predicting unbonded PT ultimate average stress. Use Figure 1.11.5-1 for determination of the number of support hinges ($N_s$).

## Figure 1.11.5-1 Support Hinge Locations

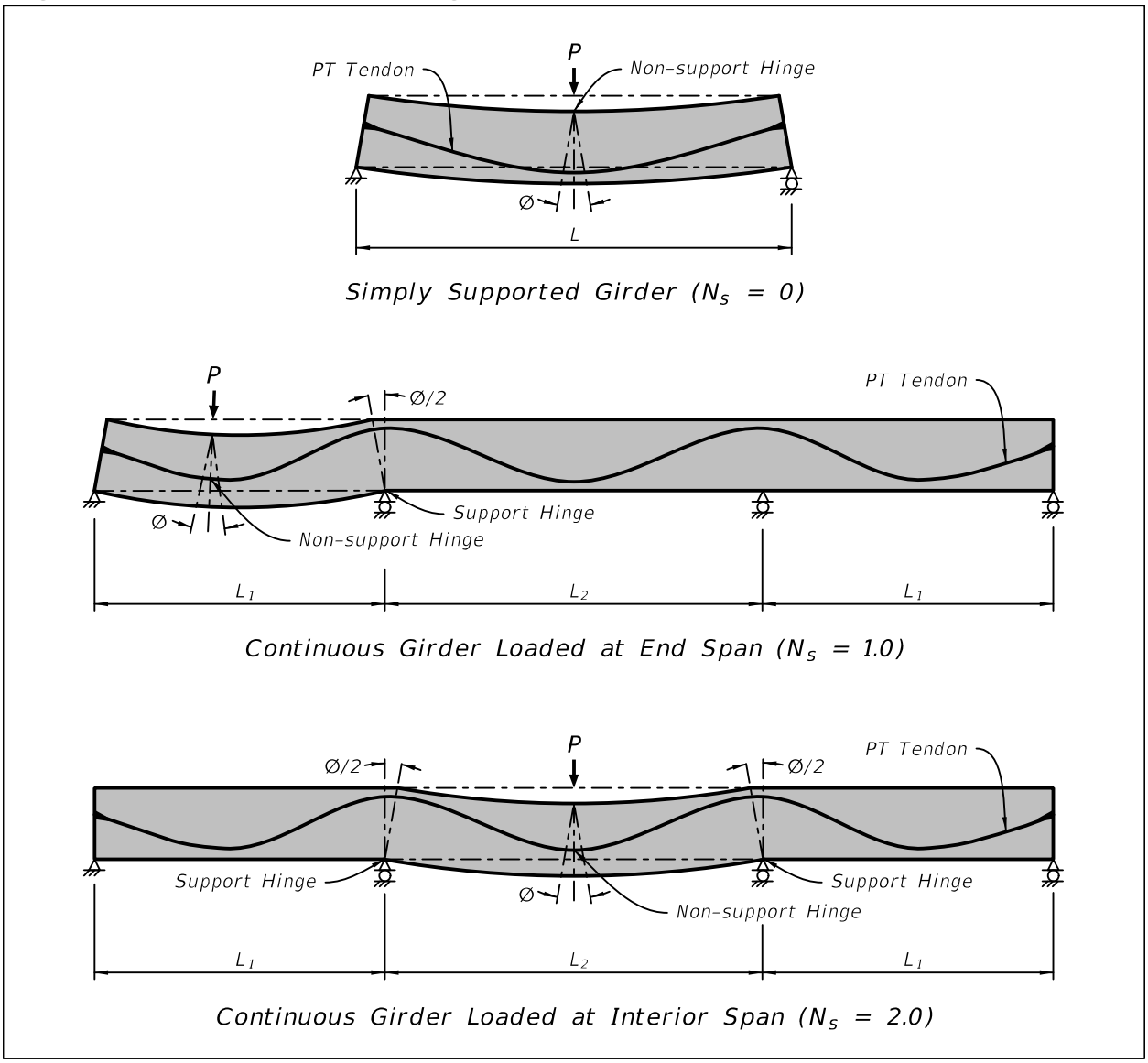


G. Use the maximum outside duct diameter to determine the effective web width at a particular level per ***LRFD*** [5.8.2.9] and [5.8.6.1].

## 1.11.6 Integrated Drawings

A. Show congested areas of post-tensioned concrete structures on integrated drawings with an assumed post-tensioning system. Such areas include anchorage zones, areas containing embedded items for the assumed post-tensioning system, areas where post-tensioning ducts deviate both in the vertical and transverse directions, and other highly congested areas as determined by the Engineer and/or the Department.

| **Modification for Non-Conventional Projects:** |
| --- |
| Delete ***SDG*** 1.11.6.A and insert the following:<br>A. Show congested areas of post-tensioned concrete structures on integrated drawings with the selected post-tensioning system. Such areas include anchorage zones, areas containing embedded items for the selected post-tensioning system, areas where post-tensioning ducts deviate both in the vertical and transverse directions, and other highly congested areas as determined by the Engineer and/or the Department. |

B. Detail integrated drawings utilizing the assumed system to a scale and quality required to show double-line reinforcing and post-tensioning components in two-dimensions (2-D) and, when necessary, in complete three-dimension (3-D) drawings and details.

C. For strand and parallel wire tendons, space anchorages to accommodate spirals based on the anchorage size and not on the number of strands or parallel wires in the tendon. See also ***SDG*** 1.11.1.C.

D. Check required clearances for stressing jacks. Do not detail structures or provide construction sequences that require curved stressing noses for jacks.

### 1.11.7 Erection Schedule and Construction Sequence (Rev. 01/17)

A. Include a description of the construction method upon which the design is based.

B. Include in the design documents, in outlined, schematic form, a typical erection schedule and anticipated construction system.

C. State assumed erection loads and support reactions in the plans, along with times of application and removal of each of the erection loads.

D. Refer to ***SDM*** Chapter 20 and ***SDM*** Chapter 23 for additional requirements, detailing considerations and general erection procedures for segmental bridges and spliced girder bridges, respectively.

E. Prove the final design by a performing a full longitudinal analysis taking into account the assumed stage-by-stage construction process and final long-term service condition, including all time dependent related effects.

*Commentary: Temporary load conditions often control the design and detailing of segmental and spliced girder structures. Ensure the structure components have been sized for the temporary and final conditions and loadings of the bridge. For large projects, the use of more than one method of construction may be necessary based on project specific site constraints.*

## 1.12 FIRE SUPPRESSION SYSTEMS

See ***PPM*** Volume 1, Section 13.5.7 for fire suppression system prohibitions.

# 2 LOADS AND LOAD FACTORS

## 2.1 GENERAL

This Chapter contains information related to loads, loadings, load factors, and load combinations. It also contains deviations from ***LRFD*** regarding Loads and Load Factors as well as characteristics of a structure that affect each.

### 2.1.1 Load Factors and Load Combinations [3.4.1]

A. In ***LRFD*** [Table 3.4.1-1], under Load Combination: LL, IM, etc., Limit State: Extreme Event I, use $\gamma_{eq} = \mathbf{0.0}$

B. See ***SDG*** 2.7.2 for additional temperature gradient requirements.

### 2.1.2 Live Loads [3.6]

A. Investigate possible future changes in the physical or functional clear roadway width of the bridge. (***LRFD*** [3.6.1.1])

*Commentary: Frequently bridges are widened and areas dedicated to pedestrian traffic become travel lanes for vehicular traffic. In the future, the sidewalk could also be simply eliminated in order to provide additional space to add a traffic lane.*

| **Modification for Non-Conventional Projects:** |
|---|
| Delete ***SDG*** 2.1.2.A and see the RFP for requirements. |

B. In addition to the vehicular loads contained in ***LRFD***, satisfy the load rating requirements of ***SDG*** 1.7.

*Commentary: Load Rating may control the design in some cases.*

## 2.2 DEAD LOADS (Rev. 01/17)

A. Future Wearing Surface: See ***SDG*** Table 2.2-1 regarding the allowance for a Future Wearing Surface.

B. Sacrificial Concrete: Bridge decks subject to the profilograph requirements of ***SDG*** Chapter 4 require an added thickness of sacrificial concrete, which must be accounted for as added Dead Load but cannot be utilized for bridge deck section properties.

C. Stay-in-Place Forms: Design all beam and girder superstructures (except segmental box girder superstructures) to include the weight of stay-in-place metal forms, where permitted. For clear spans between beams or girders greater than 14 feet, verify the availability of non-cellular forms and include any additional dead load allowance greater than 20 psf or specify the use of cellular forms (where permitted) or non-cellular forms with cover sheets.

| **Modification for Non-Conventional Projects:** |
|---|
| Delete ***SDG*** 2.2.C. |

D. See Table 2.2-1 Miscellaneous Dead Loads for common component dead loads.

## Table 2.2-1 Miscellaneous Dead Loads

| ITEM | UNIT | LOAD |
|---|---|---|
| **General** | | |
| Concrete, Counterweight (Plain) | Lb/cf | 145 |
| Concrete, Structural | Lb/cf | 150 |
| Future Wearing Surface | Lb/sf | 15[1] |
| Soil; Compacted | Lb/cf | 115 |
| Stay-in-Place Metal Forms | Lb/sf | 20[2] |
| **Traffic Railings** | | |
| 32” F-Shape (Index 420) | Lb/ft | 420 |
| Median, 32” F-Shape (Index 421) | Lb/ft | 485 |
| 42” Vertical Shape (Index 422) | Lb/ft | 590 |
| 32” Vertical Shape (Index 423) | Lb/ft | 385 |
| 42” F-Shape (Index 425) | Lb/ft | 625 |
| Corral Shape (Index 424) | Lb/ft | 460 |
| 36" Single-Slope Median (Index D426) | Lb/ft | 645 |
| 36" Single-Slope (Index D427) | Lb/ft | 430 |
| 42" Single-Slope (Index D428) | Lb/ft | 580 |
| Thrie-Beam Retrofit (Index 471, 475 & 476) | Lb/ft | 40 |
| Thrie-Beam Retrofit (Index 472, 473 & 474) | Lb/ft | 30 |
| Vertical Face Retrofit with 8” curb height (Index 480 – 483) | Lb/ft | 270 |
| Traffic Railing /Noise Wall (8'-0") (Index 5210) | Lb/ft | 1010 |
| **Pedestrian/Bicycle Railings & Fences** | | |
| Pedestrian /Bicycle Railing (27" Concrete Parapet only) (Index 820) | Lb/ft | 225 |
| Aluminum Pedestrian/Bicycle Bullet Railing (1 or 2 rails) (Index 820, 821 & 822) | Lb/ft | 10 |
| Bridge Fencing (Vertical) (Index 810) | Lb/ft | 25 |
| Bridge Fencing (Curved Top) (Index 811) | Lb/ft | 40 |
| Bridge Fencing (Enclosed) with 5 ft. clear width (Index 812) | Lb/ft | 85 |
| Bridge Picket Railing (Steel) (Index 851) | Lb/ft | 30 |
| Bridge Picket Rail (Aluminum) (Index 861) | Lb/ft | 15 |

## Table 2.2-1 Miscellaneous Dead Loads

| ITEM | UNIT | LOAD |
|---|---|---|
| **Prestressed Beams[3]** | | |
| AASHTO Type II (Index 20120) | Lb/ft | 385 |
| AASHTO Type III (Archived Index 20130) | Lb/ft | 585 |
| AASHTO Type IV (Archived Index 20140) | Lb/ft | 825 |
| AASHTO Type V (Archived Index 20150) | Lb/ft | 1055 |
| AASHTO Type VI (Archived Index 20160) | Lb/ft | 1130 |
| Florida Bulb-T 72 (Archived Index 20172) | Lb/ft | 940 |
| Florida Bulb-T 78 (Archived Index 20178) | Lb/ft | 1150 |
| Florida-U 48 Beam (Index 20248) | Lb/ft | 1260[4] |
| Florida-U 54 Beam (Index 20254) | Lb/ft | 1330[4] |
| Florida-U 63 Beam (Index 20263) | Lb/ft | 1440[4] |
| Florida-U 72 Beam (Index 20272) | Lb/ft | 1545[4] |
| Inverted-T Beam (20-inch) (Archived Index 20320) | Lb/ft | 270 |
| Florida-I 36 Beam (Index 20036) | Lb/ft | 840 |
| Florida-I 45 Beam (Index 20045) | Lb/ft | 906 |
| Florida-I 54 Beam (Index 20054) | Lb/ft | 971 |
| Florida-I 63 Beam (Index 20063) | Lb/ft | 1037 |
| Florida-I 72 Beam (Index 20072) | Lb/ft | 1103 |
| Florida-I 78 Beam (Index 20078) | Lb/ft | 1146 |
| Florida-I 84 Beam (Index 20084) | Lb/ft | 1190 |
| Florida-I 96 Beam (Index 20096) | Lb/ft | 1278 |

1 The Future Wearing Surface allowance applies only to new short bridges (see ***SDG*** 4.2. Bridge Length Definitions) and to widenings of existing bridges originally designed for a Future Wearing Surface which will not be selected for deck planing (see ***SDG*** 7.2 Widening Classifications and Definitions).
2 Unit load of metal forms and concrete required to fill the form flutes. Apply load over the projected plan area of the metal forms.
3 Weight of buildup concrete for camber and cross slope not included.
4 Weight of interior intermediate or end diaphragms not included.

## 2.3 SEISMIC PROVISIONS [3.10.9][3.10.9.2][4.7.4]

### 2.3.1 General

All bridges shall meet the seismic design requirements except the exempted bridges. For exempted bridges, only the minimum bearing support dimensions need to be satisfied as required by ***LRFD*** [4.7.4.4]. Exempted bridges include those with design spans less than or equal to 75' and simple or continuous span superstructures of any length supported entirely on elastomeric bearings.

For all non-exempt single span bridges, the horizontal design connection force in the restrained direction between the substructure and the superstructure shall be 0.05 times the tributary permanent loads. For all other non-exempt bridges, the horizontal design connection force in the restrained direction between the superstructure and substructure shall be 0.12 times the tributary permanent loads. The acceleration coefficient, $\mathbf{A_S}$, for the state of Florida is less than 0.05. Only the connections between the superstructure and substructure need to be designed for the seismic forces.

### 2.3.2 Seismic Design for Widenings

A. When seismic design is required for a major widening (see definitions in ***SDG*** Chapter 7), all new bridge elements must comply with the seismic provisions for new construction.

B. FDOT will consider seismic provisions for minor widenings on an individual basis.

| **Modification for Non-Conventional Projects:** |
| --- |
| Delete ***SDG*** 2.3.2.B and insert the following:<br><br>Do not design minor widenings for seismic provisions unless otherwise required by the RFP. |

### 2.3.3 Lateral Restraint

When lateral restraint of the superstructure is required due to seismic loading, comply with the provisions and requirements of ***SDG*** Chapter 6, "Lateral Restraint."

## 2.4 WIND LOADS (Rev. 01/17)

### 2.4.1 Wind Loads on Completed Structures: WL and WS [3.8]

A. Design Wind Speed

Use the design 3-second gust wind speed, V, from Table 2.4.1-1 in lieu of ***LRFD*** [Figure 3.8.1.1.2-1].

**Table 2.4.1-1 Design Wind Speed, V**

| County (Dist) | Design Wind Speed (mph) | County (Dist) | Design Wind Speed (mph) | County (Dist) | Design Wind Speed (mph) |
|---|---|---|---|---|---|
| Alachua (2) | 130 | Hardee (1) | 150 | Nassau (2) | 130 |
| Baker (2) | 130 | Hendry (1) | 150 | Okaloosa (3) | 150 |
| Bay (3) | 150 | Hernando (7) | 150 | Okeechobee (1) | 150 |
| Bradford (2) | 130 | Highlands (1) | 130 | Orange (5) | 150 |
| Brevard (5) | 150 | Hillsborough (7) | 150 | Osceola (5) | 150 |
| Broward (4) | 170 | Holmes (3) | 150 | Palm Beach (4) | 170 |
| Calhoun (3) | 130 | Indian River (4) | 170 | Pasco (7) | 150 |
| Charlotte (1) | 170 | Jackson (3) | 130 | Pinellas (7) | 150 |
| Citrus (7) | 150 | Jefferson (3) | 130 | Polk (1) | 150 |
| Clay (2) | 130 | Lafayette (2) | 130 | Putnam (2) | 130 |
| Collier (1) | 170 | Lake (5) | 150 | St. Johns (2) | 130 |
| Columbia (2) | 130 | Lee (1) | 130 | St. Lucie (4) | 170 |
| DeSoto (1) | 150 | Leon (3) | 130 | Santa Rosa (3) | 150 |
| Dixie (2) | 130 | Levy (2) | 130 | Sarasota (1) | 170 |
| Duval (2) | 130 | Liberty (3) | 130 | Seminole (5) | 150 |
| Escambia (3) | 150 | Madison (2) | 130 | Sumter (5) | 150 |
| Flagler (5) | 150 | Manatee (1) | 130 | Suwannee (2) | 130 |
| Franklin (3) | 150 | Marion (5) | 150 | Taylor (2) | 130 |
| Gadsden (3) | 130 | Martin (4) | 170 | Union (2) | 130 |
| Gilchrist (2) | 130 | Miami-Dade (6) | 170 | Volusia (5) | 150 |
| Glades (1) | 150 | Miami-Dade Islands (6) | 180 | Wakulla (3) | 130 |
| Gulf (3) | 150 | Monroe (6) | 170 | Walton (3) | 150 |
| Hamilton (2) | 130 | Monroe Islands (6) | 180 | Washington (3) | 150 |

| **Modification for Non-Conventional Projects:** |
|---|
| See the RFP for possible supplemental requirements to ***SDG*** 2.4.1.A. |

B. Pressure Exposure and Elevation Coefficient, $\mathbf{K_z}$

Use Ground Surface Roughness Category C unless Ground Surface Roughness Category D applies. For noise and perimeter walls, the structure height, Z, used in calculating $K_z$ may be taken less than 33 feet provided that $K_z$ is greater than or equal to 0.85.

C. Gust Effect Factor, **G**

The gust effect factor, **G**, shall be taken as 0.85.

D. Wind Loads on Noise and Perimeter Walls

Treat noise and perimeter walls as sound barriers in accordance with ***LRFD***. Noise and perimeter walls may be designed assuming the wind pressure is applied in incremental strips (e.g. per each foot of wall height).

## 2.4.2 Wind Loads on Other Structures

For wind loading on sign, lighting, and signal structures, see ***Volume 3***.

## 2.4.3 Wind Loads During Construction [3.4.2]

A. See also ***SDG*** 6.10 Erection Scheme and Beam/Girder Stability.

B. Use construction wind loads to evaluate beam/girder stability during construction.

C. Calculate wind loads during construction per ***LRFD*** [Equation 3.8.1.2.1-1] using the load factors $(\gamma_{ws})$ and design wind speeds (V) in Table 2.4.3-1, and the drag coefficient, $\mathbf{C_D}$, in ***SDG*** 2.4.3.D or ***SDG*** 2.4.3.E.

### Table 2.4.3-1 Load Factors and Design Wind Speed During Construction

| Load Combination Limit State | $(\gamma_{ws})$ | Design Wind Speed, V | |
|---|---|---|---|
| | | Construction Inactive | Construction Active |
| Strength III | 1.0 | 90 mph | 30 mph or expected wind speed, if higher |
| Service I | 1.0 | 90 mph | 30 mph or expected wind speed, if higher |

Where:

Construction Inactive = periods during which construction activities associated with the superstructure do not take place. Ex: For a typical beam/girder bridge, this includes nonwork hours during which the beam/girder bracing is to be present.

Construction Active = periods during which construction activities take place. Ex: For a typical beam/girder bridge, this includes beam/girder erection, form placement and deck concrete placement. It can be assumed that the construction active period for deck placement is in effect until the deck concrete hardens.

Check limit states separately for Construction Inactive and Construction Active wind speeds.

D. Drag Coefficient During Construction

For an I-shaped beam/girder superstructure with 5 or less beam/girder lines and a beam/girder spacing to depth ratio (S/D) of 3 or less, apply wind pressure to the projected area using the drag coefficient specified in Table 2.4.3-2. For superstructures with more than 5 beam/girder lines, apply a wind pressure to the projected area of the first 5 beams/girders, and apply a wind pressure to the full height of each subsequent beam/girder using the drag coefficient specified in Table 2.4.3-2.

For an I-shaped beam/girder superstructure with a beam/girder spacing to depth ratio (S/D) greater than 3, apply a wind pressure to the full height of each beam/girder using the drag coefficient specified in Table 2.4.3-2.

For U-shaped, flat slab, steel box girder or segmental box girder superstructures, apply a wind pressure to the projected area using the drag coefficient specified in Table 2.4.3-2.

For substructure, apply a wind pressure to the exposed area as defined in ***SDG*** 2.4.1.H using the drag coefficient specified in Table 2.4.3-2.

The projected area shall be the sum of all areas of all components as seen in elevation at 90 degrees to the longitudinal axis of the structure.

## Table 2.4.3-2 Drag Coefficient During Construction

| Component Type | | Drag Coefficient ($C_D$) | | | | |
|---|---|---|---|---|---|---|
| | | S/D ≤ 3 | | S/D > 3 | | |
| | | Beams/ Girders 1-5 | Beam/ Girder 6+ | Beam/ Girder 1 | Beam/ Girder 2 | Beam/ Girder 3+ |
| Superstructure | I-Shaped Steel Girder | 2.2 | 1.1 | 2.5 | 0 | 1.1 |
| Superstructure | I-Shaped Concrete Beam/Girder | 2.0 | 1.0 | 2.0 | 0 | 1.0 |
| Superstructure | U-Shaped Beam/ Girder or Steel Box Girder | 2.2 | | | | |
| Superstructure | Flat Slab or Segmental Box Girder | 1.5 | | | | |
| Substructure | | 1.6 | | | | |

Where:

- S = Beam/Girder Spacing (ft)
- D = Beam/Girder Depth (ft)

E. Drag Coefficient During Construction for Single Brace or Cross-Frame Design

Use Table 2.4.3-3 to determine the wind load applied to a single brace or cross frame between two beams/girders. Apply wind pressure to the height of a single beam/girder.

**Table 2.4.3-3 Drag Coefficient During Construction: Single Brace or Cross-Frame Design**

| Component Type | Drag Coefficient ($C_D$) |
|---|---|
| I-Shaped Steel Girder | 2.9 |
| I-Shaped Concrete Beam/Girder | 2.6 |
| U-Shaped or Steel Box Beam/Girder | 3.3 |

*Commentary: The conventional method for applying a wind load to beams/girders is to apply the wind pressure to the projected area. The projected area is defined as the summation of all component areas as seen in elevation at 90 degrees to the longitudinal axis of the structure. During construction, the projected area is usually the beam/girder height and the additional height caused by the cross-slope of the superstructure multiplied by the beam/girder spacing. Previous code requirements implied that the downwind beams/girders were shielded.*

*Lateral wind loads are calculated using a drag coefficient which is a dimensionless quantity that relates the wind pressure on an object to its size and shape. When two or more beams/girders are present, the leading beam/girder acts as a windbreak and disrupts the airflow over subsequent beams/girders, resulting in a phenomenon referred to as aerodynamic interference (or shielding). The effect of shielding is dependent on a number of factors including beam/girder shape, wind angle, beam/girder spacing, and number of beams/girders. In general, all beams/girders in the cross-section are subjected to wind loads and, in some cases, the drag coefficient can be negative (e.g. suction).*

*The prescribed drag coefficients and the use of the projected area method is intended to produce forces in the windward beam/girder and beam/girder system similar to forces measured in the wind tunnel tests. The prescribed drag coefficients do not indicate the exact shielding behavior.*

## 2.5 WAVE LOADS

When bridges vulnerable to coastal storms cannot practically meet the wave crest clearance requirement of the ***Drainage Manual*** Section 4.9.5, all relevant design information shall be submitted to the SDO to assist in the following determinations:

1. The level of importance of a proposed bridge (“Extremely Critical”, “Critical”, or “Non-Critical”; See Commentary below)
2. The design strategy and the associated performance objective (“Service Immediate” or “Repairable Damage”; See ***AASHTO Guide Specifications for Bridges Vulnerable to Coastal Storms*** Article 5.1)
3. The appropriate level of analysis (Level I, II, or III; See ***AASHTO Guide Specifications for Bridges Vulnerable to Coastal Storms*** Article 6.2)

The above determinations will be made by the SDO in consultation with the DSDO, Traffic Engineer, Environmental Engineer, Hydraulic Engineer, and/or Coastal Engineer and will be included in the PD & E documents. As a minimum, the items listed below will be considered in the determinations:

- Age and condition of existing bridge structure and the feasibility/cost of retrofitting to resist wave forces (if applicable)
- Proposed bridge location and elevation alternatives (elevation relative to the design wave crest)
- Estimated cost of elevating the superstructure above the “wave crest clearance” (1 ft above the design wave crest), and/or the justification of why it cannot be done
- Affect of varying wave loading on construction costs (due to location and/or height adjustments)
- Existing and projected traffic volumes
- Route impacts on local residents and businesses
- Availability and length of detours
- Evacuation/emergency response routes
- Duration/difficulty/cost of bridge damage repair or replacement
- Other safety and economic impacts due the loss of the structure

Except where bridges satisfy the “wave crest clearance” or are deemed “Non-Critical”, the structures designer shall calculate and apply wave forces according to the AASHTO Guide Specifications for Bridges Vulnerable to Coastal Storms using the determinations defined above along with the necessary hydraulic data provided by the coastal engineer.

*Commentary: Selecting a design strategy will depend on the importance/criticality of the bridge considering the consequences of bridge damage caused by wave forces. If a bridge is deemed “Extremely Critical”, it would typically be designed to resist wave forces at the Strength Limit State to the “Service Immediate” performance level. If a bridge is deemed “Critical”, it would generally be designed to resist the wave forces at the Extreme Event Limit State to a “Repairable Damage” performance level. Bridges that are deemed “Non-Critical” will not be evaluated for wave forces.*

| **Modification for Non-Conventional Projects:** |
| --- |
| Delete ***SDG*** 2.5 and see the RFP for requirements. |

## 2.6 VEHICULAR COLLISION FORCE [3.6.5]

### 2.6.1 General

A. Design structures according to ***LRFD*** [3.6.5] and this section. Calculate the annual frequency for a pier to be hit by a heavy vehicle using ***LRFD*** [C3.6.5.1]. Determine the ADTT based on the design year AADT on the lower roadway. Grade separation bridges carrying Interstate or other high speed limited access roadways are considered critical for this evaluation. The Department will determine if other grade separation bridges are critical for heavy vehicle impact loading using the following items:

- Existing and projected traffic volumes on the bridge
- Structure type, in particular continuous spans or integral piers
- Route impacts on local residents and businesses
- Availability and length of detours
- Evacuation/emergency response routes
- Estimated duration/difficulty/cost of bridge damage repair or replacement
- Other safety and economic impacts due to the loss of the structure

*Commentary: When a bridge is determined to be critical, which pier design strategy (shielding or designing for the equivalent static load) is selected will depend on the design and geometrics of the pier itself and the overall roadway configuration near the pier, e.g., other requirements for the use of adjacent roadside barriers, sight distance limitations, geometrics of the lower roadway.*

| **Modification for Non-Conventional Projects:** |
|---|
| Delete ***SDG*** 2.6.1.A and insert the following:<br>A. Design structures according to ***LRFD*** [3.6.5] and this section. Calculate the annual frequency for a pier to be hit by a heavy vehicle using ***LRFD*** [C3.6.5.1]. Determine the ADTT based on the design year AADT on the lower roadway. Grade separation bridges carrying Interstate or other high speed limited access roadways are considered critical for this evaluation. See the RFP for requirements for all other bridges. |

B. As used in this section, "setback distance" is defined by ***LRFD*** [3.6.5] and "clear zone" and "lateral offset" are as defined by the ***PPM*** Volume 1, Chapter 4.

C. Consider planned widenings or future realignments of lower roadways when establishing limits of setback distances and clear zones or lateral offset limits.

D. When a ground mounted Test Level 5 (TL-5) barrier is required, select a 42-inch or 54-inch tall Test Level 5 (TL-5) Pier Protection Barrier based on the location of the barrier relative to the pier it is shielding in accordance with the requirements of ***LRFD*** and ***Design Standards*** Index 411.

### 2.6.2 End Bents and Retaining Walls (Rev. 01/17)

A. End bents behind conventional cantilever retaining walls or within mechanically stabilized earth walls are considered to be sufficiently shielded with respect to ***LRFD*** [3.6.5] and do not require additional protection from vehicular collision.

B. Retaining walls generally do not require protection from vehicular collision.

C. Roadside Barriers may still be required in these locations in accordance with the requirements of the ***PPM*** Volume 1, Chapter 4.

D. Railroad crash walls are not required at end bents and retaining walls.

### 2.6.3 New Structures Over or Adjacent to Roadways

A. Design all piers located within the setback distance for the ***LRFD*** equivalent static force, or shield piers using ***Design Standards*** Index 411 Pier Protection Barriers or other similar Test Level 5 barriers if the calculated annual frequency for the pier to be hit by a heavy vehicle is greater than or equal to 0.0001 for critical bridges or 0.001 for typical (non-critical) bridges. Utilize the shear reinforcement required at the pier base to a distance of 8 feet above the adjacent ground surface.

B. Provide roadside barriers in accordance with ***PPM***, Volume 1, Chapter 4 for piers located within the clear zone or lateral offset limits and that are not shielded using ***Design Standards*** Index 411 Pier Protection Barriers or other similar Test Level 5 barriers as described above.

C. Do not use pile bents within the setback distance.

### 2.6.4 Roadway Work Beneath or Adjacent to Existing Structures

A. For existing piers located within the setback distance that are theoretically capable of resisting the ***LRFD*** equivalent static force, provide roadside barriers in accordance with the ***PPM***, Volume 1, Chapter 4, as applicable, unless a need (other than pier protection) can be documented to provide ***Design Standards*** Index 411, Pier Protection Barriers or other TL-5 barriers.

B. Consider local crash histories of both large and small vehicles, site conditions, shoulder widths, traffic counts, traffic mixes, design speed, sight distances, pedestrian facilities, utilities and redundancy within the pier when documenting the need to provide 42-inch or 54-inch Pier Protection Barriers.

C. For existing piers and pile bents located within the setback distance that are not theoretically capable of resisting the ***LRFD*** equivalent static force and that are unshielded, shielded by guardrail or shielded by non-crash tested barrier wall:

   1. When Resurfacing, Restoration, Rehabilitation (RRR) criteria applies and on freeway resurfacing projects, determine the need for roadside barriers in accordance with the ***PPM***, Volume 1, Chapter 4, as applicable. Existing guardrail meeting the requirements of ***PPM***, Volume 1, Chapter 4 may be left in place. If there is insufficient deflection space for the existing guardrail and/or new concrete barrier wall is determined to be required, provide ***Design Standards*** Index 411, Pier Protection Barrier or other TL-5 barriers if the calculated annual frequency for

the pier to be hit by a heavy vehicle is greater than or equal to 0.0001 for critical bridges or 0.001 for typical (non-critical) bridges. At other locations where concrete barrier wall is determined to be required, provide ***Design Standards*** Index 410, Concrete Barrier Walls. Where required sight distances cannot be maintained using ***Design Standard***s Index 411 Pier Protection Barriers or other TL-5 barriers, ***Design Standards*** Index 410, Concrete Barrier Walls may be used to shield piers. A Design Variation for pier strength is required.

2. When new construction criteria applies except on freeway resurfacing projects, provide ***Design Standards*** Index 411, Pier Protection Barriers or other TL-5 barriers if the calculated annual frequency for the pier to be hit by a heavy vehicle is greater than or equal to 0.0001 for critical bridges or 0.001 for typical (non-critical) bridges.

D. For existing piers and pile bents located within the setback distance that are not theoretically capable of resisting the ***LRFD*** equivalent static force and that are shielded by 32-inch or 42-inch ***Design Standards*** Index 410, New Jersey Shape or F-Shape Concrete Barrier Wall, leave the existing barrier wall in place unless a need can be documented to either retrofit the pier as described below or replace the existing barrier wall with a ***Design Standards*** Index 411, Pier Protection Barrier or other TL-5 barrier. Consider local crash histories of both large and small vehicles, site conditions, shoulder widths, traffic counts, traffic mixes, design speed, sight distances, pedestrian facilities, utilities and redundancy within the pier or bent when documenting the need to replace the existing barrier wall.

E. In lieu of providing 42-inch or 54-inch Pier Protection Barriers, consider providing integral crash walls, struts, collars, etc. to retrofit or strengthen existing piers and pile bents to resist the ***LRFD*** equivalent static force. This approach may be appropriate where the use of 42-inch or 54-inch Pier Protection Barriers would adversely affect adjacent pedestrian facilities, utilities, sight distances on adjacent roadways, etc.

## 2.6.5 Widening of Existing Structures Over or Adjacent to Roadways

A. Design new columns of piers lengthened for bridge widenings that are located within the setback distance for the ***LRFD*** equivalent static force, or shield piers using ***Design Standards*** Index 411 Pier Protection Barriers or other similar Test Level 5 barriers if the calculated annual frequency for the pier to be hit by a heavy vehicle is greater than or equal to 0.0001 for critical bridges or 0.001 for typical (non-critical) bridges. Utilize the shear reinforcement required at the column base to a distance of eight feet above the adjacent ground surface. Maintain the scale and proportions of existing columns when designing the new columns.

B. Provide ***Design Standards*** 400, 410 or 411 barriers as described above for existing structures. Lengthen existing installations of ***Design Standards*** Index 410, Concrete Barrier Walls as required to shield the entire lengthened piers unless a need can be documented to replace the barriers with ***Design Standards*** Index 411, Pier Protection Barriers or other TL-5 barriers.

C. Pile bents may be lengthened within the clear zone. Shield lengthened pile bents within the clear zone using ***Design Standards*** Index 411 Pier Protection Barriers or other similar Test Level 5 barriers.

## 2.6.6 Bridge Superstructures Adjacent to Piers of Other Bridges

A. Provide 42-inch TL-5 bridge traffic railings on lower level bridges adjacent to pier columns of upper level bridges (e.g. bridges on multi-level interchanges) if the gutter line of the lower level bridge traffic railing is within 5 feet of the upper level bridge pier column.

B. Do not design the upper level bridge pier column for the ***LRFD*** equivalent static force at this location. Evaluate existing installations on a case by case basis to determine the potential need to retrofit the existing lower bridge traffic railing.

## 2.6.7 Structures Over or Adjacent to Railroad and Light Rail Tracks

A. The following information is based on requirements of the current ***American Railway Engineering and Maintenance-of-Way Association (AREMA)*** ***Manual for Railway Engineering*** and is intended only as a guide to the minimum requirements for piers adjacent to railroad tracks and crash walls used to shield them. Follow the ***AREMA*** specifications and the specific railroad requirements in identifying the need for and the designing of crash walls. See ***PPM***, Volume 1, Chapter 6 for horizontal clearance requirements.

B. Crash walls are required for piers located 25 feet or less from the centerline of the track, measured perpendicular to the track, unless the size of the pier satisfies the criteria for heavy construction. A pier or column shall be considered of heavy construction if it has a minimum cross-sectional area of 30 square feet. The minimum dimension shall be 2'-6", and the larger dimension of rectangular piers or columns shall be parallel to the track. Multiple column piers with individual columns meeting the requirements of heavy construction do not require crash walls.

C. Crash walls for piers located from 12 to 25 feet from the centerline of track shall have a minimum height of 6 feet above the top of rail. Piers less than 12 feet from the centerline of track shall have a minimum crash wall height of 12 feet above the top of rail.

D. The face of the crash wall shall present a smooth surface, extending a distance of at least 6-inches beyond the face of the column on the side of the wall adjacent to the track. The crash wall shall extend at least 4 feet below the lowest surrounding grade. The crash wall shall be anchored with dowels to each column and footing unless the crash wall completely encapsulates the column or pile by at least 6-inches on the front and back face. The bottom of footings shall be at or below the bottom of the crash wall. If piles are used to support the crash wall, they shall typically be of the same type and size as the piles used to support the bridge and shall be driven to the minimum penetration required by the ***Specifications***.

E. The crash wall shall be at least 2'-6" thick. When a pier consists of a single column, the crash wall shall be a minimum of 12 feet in length, parallel to the track, and centered longitudinally on the pier. When two or more light columns compose a pier, the crash wall shall connect the columns and extend at least 1 foot beyond the outermost columns, parallel to the track.

F. Lengthen existing crash walls shielding existing piers or bents that are lengthened to accommodate a bridge widening. The lengthened section of crash wall shall meet the requirements for new construction.

G. Construct new crash walls to shield existing piers or bents that are lengthened to accommodate a bridge widening if the piers or bents do not meet the criteria for heavy construction and do not have existing crash walls.

H. In addition to the above requirements, as conditions warrant or as directed by the Department, provide crash walls with a minimum height of 6 feet above the top of rail for bridge piers located more than 25 feet from the centerline of track. Consider the horizontal alignment of the track, adjacent embankment height, and assess the consequences of serious damage to the bridge in the case of a collision.

| **Modification for Non-Conventional Projects:** |
| --- |
| Delete ***SDG*** 2.6.7.H and see the RFP for requirements. |

I. These requirements generally do not apply to automated people mover systems. Evaluate the need for pier protection on a project specific basis for people mover systems.

## 2.6.8 Design and Analysis Methods

A. In addition to utilizing the general design recommendations presented in ***LRFD*** (except as noted herein), the EOR must also use the following design and analysis methods.

B. Consider the vehicular collision force per ***LRFD*** as a point load acting on the pier column (no distribution of force due to frame action within the pier, foundation and superstructure). Further analysis of the piles, footings, pier cap, other columns, etc., is not required.

C. Check the column shear capacity assuming failure along two shear planes inclined at 45 degree angles above and below the point of force application.

D. The impacted structure is expected to remain stable and to continue to support the bridge superstructure subsequent to the collision event. Note that resistance factors are taken as 1.0, inelastic behavior is anticipated and proper detailing is required.

*Commentary: **Design Standards** Index 411 Pier Protection Barriers complies with the requirements of **LRFD** [3.6.5] for **NCHRP Report 350** Test Level 5 barriers used for pier protection. The intended purpose of these barriers is to shield a pier from traffic, primarily large trucks and tractor trailers, so as to reduce the separate but related potentials for damage to the pier and collapse of the bridge that might be the results of a truck collision with a pier.*

*Consider overall safety at a given location, including vehicle and pedestrian traffic, when selecting the appropriate type of pier protection to be used. Consider the effect 42-inch and 54-inch tall barriers might have on sight distances, particularly near intersections, and the end treatments that will be required for these taller barriers.*

*Generally for new construction, reinforced concrete pier columns can be designed to resist the vehicular collision force per **LRFD**. Therefore, only a **Design Standards** Index 400 guardrail or Index 410 Concrete Barrier Wall might be necessary to shield traffic from the pier.*

*The 32-inch tall Concrete Barrier Wall shown in **Design Standards** Index 410 has provided overall satisfactory performance in shielding bridge piers for many years. Therefore, replacement of existing installations of these walls is not warranted at most locations, in particular on low speed roadways, unless there is a crash history at the site that indicates otherwise.*

*Field observation of bridge piers that have been impacted and crash testing of other roadside hardware items indicate little opportunity for an impacted structure to distribute the dynamic impact force during the extremely brief duration of a crash event. The theoretical behavior of a modeled pier when loaded with the equivalent static impact force will likely be substantially different than the behavior of an actual pier subjected to the dynamic impact force from a vehicle crash. Thus a more refined analysis of the force distribution within the pier, foundation and into the superstructure using the equivalent static force is not warranted.*

*As stated in the **AREMA Manual for Railway Engineering,** the crash wall provisions are not intended to create a structure that will resist the full impact of a direct collision by a loaded train at high speed. Rather, the intent is to reduce the damage caused by shifted loads or derailed equipment that might impact a pier.*

## 2.7 FORCE EFFECTS DUE TO SUPERIMPOSED DEFORMATIONS [3.12]

### 2.7.1 Uniform Temperature

A. In lieu of ***LRFD*** [3.12.2], Procedures A and B, substitute the following table:

**Table 2.7.1-1 Temperature Range by Superstructure Material**

| Superstructure Material | Temperature Range (Degrees Fahrenheit) | | | |
|---|---|---|---|---|
| | Mean | High | Low | Range |
| Concrete Only | 70 | 105 | 35 | 70 |
| Concrete Deck on Steel Girder | 70 | 110 | 30 | 80 |
| Steel Only | 70 | 120 | 30 | 90 |

B. Note the minimum and maximum design temperatures on drawings for girders, expansion joints and bearings.

C. For detailing purposes, take the normal mean temperature from this table.

D. In accordance with ***LRFD*** [Table 3.4.1-1], base temperature rise and fall on 120% of the maximum value given in Table.

### 2.7.2 Temperature Gradient [3.12.3]

Delete the second paragraph of ***LRFD*** [3.12.3] and substitute the following:

"Include the effects of Temperature Gradient in the design of continuous concrete superstructures only. The vertical Temperature Gradient shall be taken as shown in ***LRFD*** [Figure 3.12.3-2]."

## 2.8 BARRIERS AND RAILINGS [4.6.2.2]

### 2.8.1 Distribution for Beam-Slab Bridges

Distribute barrier and railing permanent loads in accordance with ***LRFD*** [4.6.2.2].

### 2.8.2 Limit State Checks [2.5.2.6][3.4.1][4.6.3] (Rev. 01/17)

Traffic and pedestrian railings and raised sidewalks are not to be used for the determination of deflections or for service or fatigue limit state checks.

## 2.9 LIVE LOAD DISTRIBUTION FACTORS [4.6.2.2][4.6.3.1]

A. For bridge superstructures meeting the requirements of ***LRFD*** [4.6.2.2], live load distribution factors shall not be less than the values given by the approximate methods. In ***LRFD*** [4.6.2.2.2], extend the Range of Applicability as follows:

1. ***LRFD*** [Table 4.6.2.2.2b-1]:
   a. For Florida-U beam bridges (Type "c" cross-section) change the depth parameter range to $18 < d < 72$, and the span length parameter range to $20 < L < 170$.
   b. For prestressed concrete slab beam bridges (Type "f" cross-section) change the width parameter to $29 < b < 60$, and the number of beams parameter range to $4 \leq N_b \leq 20$.
   c. For prestressed concrete I-beam bridges (Type "k" cross-section) change the longitudinal stiffness parameter range to $10{,}000 < Kg < 8{,}500{,}000$.
2. ***LRFD*** [Table 4.6.2.2.3a-1]:
   a. For Florida-U beam bridges (Type "c" cross-section) change the depth parameter range to $18 < d < 72$, and the span length parameter range to $20 < L < 170$.
   b. For prestressed concrete slab beam bridges (Type "f" cross-section) change the number of beams parameter range to $4 \leq N_b \leq 20$, the width parameter to $29 < b < 60$, and the moment of inertia range to $5{,}700 < I < 610{,}000$.
3. ***LRFD*** [Table 4.6.2.2.3b-1]: for prestressed concrete slab beam bridges (Type "f" cross-section) change the width parameter to $29 < b < 60$.
4. ***LRFD*** [Table 4.6.2.2.3c-1]:
   a. For Florida-U beam bridges (Type "c" cross-section) change the depth parameter range to $18 < d < 72$, and the span length parameter range to $20 < L < 170$.
   b. For prestressed concrete slab beam bridges (Type "f" cross-section) change the depth parameter range to $12 < d < 60$, the width parameter to $29 < b < 60$, and the number of beams parameter range to $4 \leq N_b \leq 20$.

*Commentary: The **LRFD** distribution factor equations are largely based on work conducted in NCHRP Project 12-26. When one or more of the parameters are outside the listed range of applicability, the equation could still remain valid, particularly when the value(s) is (are) only slightly outside the range. The extended values given in the **SDG** are considered slightly outside of the **LRFD** range of applicability. If one or more of the parameters greatly exceed the range of applicability, engineering judgment needs to be exercised.*

B. Delete the third paragraph of ***LRFD*** [4.6.3.1] and add the following:

When a refined method of analysis is used for bridge superstructures not meeting the requirements of ***LRFD*** [4.6.2.2], indicate the name, version, and date of the software used on the FDOT Load Rating Summary Tables.

C. When widening existing AASHTO and Florida Bulb-T beam bridges with Florida-I Beams, the live load distribution factors may be calculated using the ***LRFD*** [4.6.2.2] approximate method.

*Commentary: The **LRFD** approximate method produces distribution factors that are conservative when compared to refined analyses even though the beam stiffnesses and spacings vary significantly.*

D. Use a refined method of analysis, e.g. finite element modeling, to determine live load distribution factors for beam or girder supported superstructures where the beams or girders are not parallel, or approximately parallel, to the direction of traffic on the bridge, e.g. bridges used in conjunction with braided ramps.

## 2.10 REDUNDANCY AND OPERATIONAL IMPORTANCE [1.3.4 AND 1.3.5]

A. Redundancy [1.3.4]

Delete the Redundancy factors, $\eta_R$, in ***LRFD*** [1.3.4] and use $\eta_R = \mathbf{1.0}$ unless a revised value is established in the tables below.

| **Redundancy Factors, $\eta_R$ for Flexural and Axial Effects** | |
|---|---|
| **Structure Type** | **$\eta_R$ Factor** |
| Welded Members in Two Truss/Arch Bridges | 1.20 |
| Floor beams with Spacing > 12 feet and Non-Continuous Stringers and Deck | 1.20 |
| Floor beams with Spacing > 12 feet and Non-Continuous Stringers but with Continuous Deck | 1.10 |
| Steel Piers (Caps, columns, C-Piers, Straddle Piers, etc.) | 1.20 |
| Concrete C-Piers and Straddle Bents or Piers located over roadways | 1.05 |

| Redundancy Factors, $\eta_R$ for Steel Girder Bridges | | | | | | |
|---|---|---|---|---|---|---|
| **Number of Girders in Cross Section** | **Span Type** | **# of Hinges required for Mechanism** | **I-Girders** | | **Box Girders** | |
| | | | **With Cross-Frames[1]** | **Without Cross-Frames** | **With Exterior Diaphragms** | **Without Exterior Diaphragms** |
| 2 | Interior | 3 | 1.20 | Not Permitted | 1.00 | 1.20 |
| | End | 2 | 1.20 | Not Permitted | 1.00 | 1.20 |
| | Simple | 1 | 1.20 | Not Permitted | 1.05 | 1.20 |
| 3 or 4 | Interior | 3 | 1.00 | Not Permitted | 1.00 | 1.00 |
| | End | 2 | 1.00 | Not Permitted | 1.00 | 1.05 |
| | Simple | 1 | 1.00 | Not Permitted | 1.00 | 1.10 |
| 5 or more | Interior | 3 | 1.00 | Not Permitted | 1.00 | 1.00 |
| | End | 2 | 1.00 | Not Permitted | 1.00 | 1.00 |
| | Simple | 1 | 1.00 | Not Permitted | 1.00 | 1.05 |

1 With at least three evenly spaced intermediate cross-frames or floor beams (excluding end cross-frames) in each span.

B. Operational Importance [1.3.5]

Delete the operational importance factors, $\eta_I$, in ***LRFD*** [1.3.5] and use $\eta_I$ = **1.0** unless otherwise approved by the Department.

| **Modification for Non-Conventional Projects:** |
|---|
| Delete ***SDG*** 2.10.B and see the RFP for requirements. |

## 2.11 VESSEL COLLISION [3.14]

### 2.11.1 General [3.14.1]

The design of all bridges over navigable waters must include consideration for possible Vessel Collision (usually from barges or ocean going ships). Conduct a vessel risk analysis to determine the most economical method for protecting the bridge. The marine vessel traffic characteristics are available for bridges located across inland waterways and rivers carrying predominately barges. The number of vessel passages and the vessel sizes are embedded as an integral part of the Department's Vessel Collision Risk Analysis Software. The vessel traffic provided is based on the year 2000 and an automatic traffic escalation factor is provided by the software for the various past points which one selects. It is recommended that the engineer compare the total vessel trip count being used in the risk analysis with the latest total vessel trip count provided for the appropriate section of waterway as published by the Army Corps. The escalation factor provided by the software can be modified by the engineer. The importance classification is provided for existing bridge sites and will be provided by the Department for any new bridge location. Port facilities and small terminals handling ships are not covered by the catalog of vessel traffic characteristics. In these cases, on-site investigation is required to establish the vessel traffic characteristics. Utilize the ***LRFD*** specification and comply with the procedure described hereinafter.

| **Modification for Non-Conventional Projects:** |
| --- |
| Add the following at the end of ***SDG*** 2.11.1:<br>See the RFP for the importance classification. |

### 2.11.2 Research and Information Assembly

(When not provided by the Department)

A. Data Sources:

1. U.S. Army Corps of Engineers, Waterborne Commerce Statistics Center, P.O. Box 61280, New Orleans, LA 70161. Telephone: (504) 862-1472.
2. U.S. Army Corps of Engineers, Navigation Data Center (http://www.navigationdatacenter.us/publications.htm)
3. U.S. Army Corps of Engineers, "Waterborne Commerce of the United States (WCUS), Parts 1 & 2," Water Resources Support Center (WRSC), Fort Belvoir, VA.
4. U.S. Army Corps of Engineers, "Waterborne Transportation Lines of the United States," WRSC, Fort Belvoir, VA.
5. U.S. Army Corps of Engineers (COE), District Offices.
6. U.S. Coast Guard, Marine Safety Office (MSO).
7. Port Authorities and Water Dependent Industries.

8. Pilot Associations and Merchant Marine Organizations.
9. National Oceanic and Atmospheric Administration (NOAA), "Tidal Current Tables; Tidal Current Charts and Nautical Charts," National Ocean Service, Rockville, Maryland.
10. Bridge tender record for bascule bridge at the District Maintenance Office.
11. Local tug and barge companies.

B. Assembly of Information:

The EOR must assemble the following information:

1. Characteristics of the waterway including:
   a. Nautical chart of the waterway.
   b. Type and geometry of bridge.
   c. Preliminary plan and elevation drawings depicting the number, size and location of the proposed piers, navigation channel, width, depth and geometry.
   d. Average current velocity across the waterway.
2. Characteristics of the vessels and traffic including:
   a. Ship, tug and barge sizes (length, width and height)
   b. Number of passages for ships, tugs and barges per year (last five years and prediction to end of 25 years in the future).
   c. Vessel displacements.
   d. Cargo displacements (deadweight tonnage).
   e. Draft (depth below the waterline) of ships, tugs and barges.
   f. The overall length and speed of tow.
3. Accident reports.
4. Bridge Importance Classification.

### 2.11.3 Design Vessel [3.14.4][3.14.5.3]

When utilizing the FDOT's Mathcad software for conducting the Vessel Collision risk analysis, a "Design Vessel," which represents all the vessels, is not required. The software computes the risk of collision for several vessel groups with every pier. When calculating the geometric probability, the overall length of each vessel group (LOA) is used instead of the LOA of a single "Design Vessel."

## 2.11.4 Design Methodology - Damage Permitted [3.14.13]

In addition to utilizing the general design recommendations presented in ***LRFD*** (except as noted herein), the EOR must also use the following design methodology:

A. At least one iteration of secondary effects in columns must be included; i.e., axial load times the initial lateral deflection.

B. The analysis must include the effects of force transfer to the superstructure. Bearings, including neoprene pads, transfer lateral forces to the superstructure. Analysis of force transfer through the mechanisms at the superstructure/ substructure interface must be evaluated by use of generally accepted theory and practice.

C. The nominal bearing resistance ($R_n$) of axially loaded piles must be limited to the maximum pile driving [RC] resistance values given in ***SDG*** Chapter 3. Load redistribution is not permitted when the maximum pile driving [RC] resistance is reached.

| **Modification for Non-Conventional Projects:** |
| --- |
| Delete ***SDG*** 2.11.4.C and substitute the following:<br>C. Load redistribution is not permitted when the maximum pile driving [RC] resistance is reached. |

D. Lateral soil-pile response must be determined by concepts utilizing a coefficient of sub-grade modulus provided or approved by the Geotechnical Engineer. Group effects must be considered.

E. For the designer's Vessel Collision risk analysis, the FDOT will determine whether a bridge is critical or non-critical. A list is provided with the Department's software.

F. Use Load Combination "Extreme Event II" as follows:

$$(\mathbf{PermanentLoads}) + \mathbf{WA} + \mathbf{FR} + \mathbf{CV}$$

With all load factors equal to 1.0. Nonlinear structural effects must be included and can be significant. It is anticipated that the entire substructure (including piles) may have to be replaced and the superstructure repaired if a bridge is subjected to this design impact load; however, the superstructure must not collapse. For scour considerations, see ***SDG*** 2.11.8.

*Commentary: Further refinement or complication of this load combination (i.e. variable permanent load factors $\gamma_p$ and a transient load factor of 0.5 as shown in **LRFD** [Table 3.4.1-1]) is unwarranted.*

G. Distribute the total risk per pier as uniformly as possible while allowing practical construction considerations. Ignore any benefit provided to the channel piers if a fender system is provided.

H. Pier strengths for the first two piers on each side of the channel shall be proportioned such that the Annual Frequency of Collapse per pier shall be less than the Acceptable Risk of Bridge Collapse divided by the total number of piers within a distance of 6 times LOA of the longest vessel group.

## 2.11.5 Widenings

Major widening of bridges spanning navigable waterways must be designed for Vessel Collision. Minor widenings of bridges spanning navigable waterways will be considered on an individual basis for Vessel Collision design requirements. (see ***SDG*** 7.2)

| **Modification for Non-Conventional Projects:** |
|---|
| Delete second sentence of ***SDG*** 2.11.5 and see the RFP for requirements. |

## 2.11.6 Movable Bridges

For movable bridges, comply with the requirements of this chapter.

## 2.11.7 Channel Span Unit

A. The length of the main span between centerlines of piers at the navigable channel must be based upon the Coast Guard requirements, the Vessel Collision risk analysis (in conjunction with a least-cost analysis), and aesthetic considerations.

B. When vessel traffic volume at high level fixed bridges is such that the risk analysis results in channel pier strength requirements in excess of 1,500 kips, provide a channel span unit consisting of one of the following:

   1. A minimum 3-span steel continuous unit in which the channel span is not an end span of the unit.
   2. A minimum 3-span continuous post-tensioned concrete unit in which the channel span is not an end span of the unit.
   3. Prestressed beams made continuous only for live load with a minimum 3-span continuous deck and a single monolithic full-width continuity diaphragm at each interior pier. The channel span shall not be an end span of the continuous unit.

*Commentary: For channel span units subject to high vessel impact loads, structural redundancy is required from a risk standpoint to maximize survivability of the unit in the case of a vessel collision with one of the piers.*

## 2.11.8 Scour with Vessel Collision [3.14.1]

A. Substructures must be designed for an extreme Vessel Collision load by a ship or barge simultaneous with scour. Design the substructure to withstand the following two Load/Scour (**LS**) combinations:

   1. Load/Scour Combination 1:

      $\mathbf{LS}_{(1)}$ = Vessel Collision @ 1/2 Long-term Scour [Eq. 2-1]

      Where:

      Vessel Collision: Assumed to occur at normal operating speed.

      Long-Term Scour: Defined in Chapter 4 of the ***FDOT Drainage Manual.***

2. Load/Scour Combination 2:

$$\mathbf{LS}_{(2)} = \text{Minimum Impact Vessel @ 1/2 100-Year Scour} \qquad \text{[Eq. 2-2]}$$

Where:

Min. Impact Vessel as defined in ***LRFD*** [3.14.1] with related collision speed.

100-Year Scour as defined in Chapter 4 of the ***FDOT Drainage Manual.***

B. When preparing the soil models for computing the substructure strengths, and when otherwise modeling stiffness, analyze and assign soil strength parameters to the soil depth that is subject to Local and Contraction Scour that may have filled back in. The soil model must utilize strength characteristics over this depth that are compatible with the type soil that would be present after having been hydraulically redeposited.

*Commentary: In many cases, there may be little difference between the soil strength of the natural streambed and that of the soil that is redeposited subsequent to a scour event.*

## 2.11.9 Application of Impact Forces [3.14.14]

When the length to width ratio (**L/W**) is 2.0 or greater for long narrow footings in the waterway, apply the longitudinal force within the limits of the distance that is equal to the length minus twice the width (**L-2W**), in accordance with Figure 2.11.9-1.

### Figure 2.11.9-1 Application of Longitudinal Vessel Impact Force on Long Footings

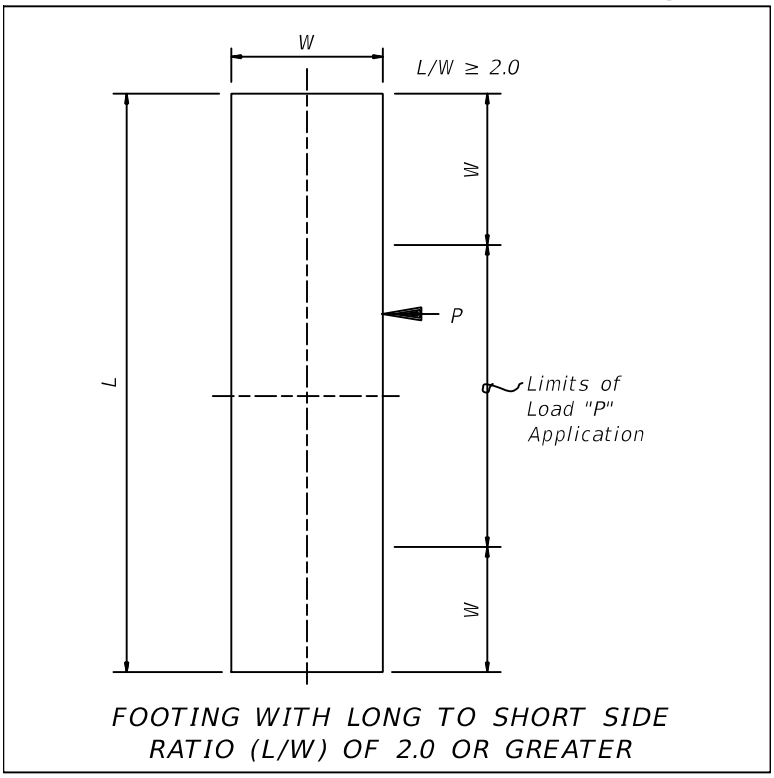

### 2.11.10 Impact Forces on Superstructure [3.14.14.2]

Apply Vessel Impact Forces (superstructure) in accordance with ***LRFD*** [3.14.14.2].

## 2.12 SUBSTRUCTURE LIMIT STATES

### 2.12.1 Strength and Service (always required)

Use load combinations as specified in ***LRFD*** [Table 3.4.1-1] with the most severe case of scour, including the 100 year flood event.

### 2.12.2 Extreme Event (if required)

Use ***LRFD*** load combination Extreme Event II for collision by vessels, collision by vehicles, and check floods as modified below.

A. If vessel collision is considered, use load combination groups as specified in ***SDG*** 2.11.4, Paragraph F and utilizing scour depths as specified in ***SDG*** 2.11.8.

B. See ***SDG*** 2.6 if vehicular collision is considered.

C. If scour is predicted, check for stability during the superflood event using the following load combination (most severe case of scour including the 500-year flood).

$$\gamma_{\mathbf{p}}(\mathbf{DC}) + \gamma_{\mathbf{p}}(\mathbf{DW}) + \gamma_{\mathbf{p}}(\mathbf{EH}) + \gamma_{\mathbf{p}}(\mathbf{EL}) + \mathbf{0.5}(\mathbf{L}) + \mathbf{1.0}(\mathbf{WA}) + \mathbf{1.0}(\mathbf{FR}) \qquad \text{[Eq. 2-3]}$$

Where, **L = LL + IM + CE + BR + PL + LS**

(All terms as per ***LRFD***)

## 2.13 CONSTRUCTION LOADS

### 2.13.1 Constructability Limit State Checks

In the absence of more accurate information, the following construction loads can be assumed for investigation of the strength and service limit states during construction in accordance with ***LRFD*** [3.4.2] and ***SDG*** 2.4.3, and for investigation of deck overhang bracket force effects in accordance with ***LRFD*** [6.10.3.4]. These loads are applicable to conventional beam or girder superstructures with cast-in-place decks. All construction loads assumed in the design of the structure shall be listed in the plans.

A. Finishing machine load: The finishing machine load shall be per the manufacturer's specifications and be applied as a moving load positioned to produce the maximum response. In the absence of manufacturer's specifications, assume the following loads:

| W = Bridge Width (ft) | Total Weight of Finishing Machine (kips) |
|---|---|
| 26 ≤ W ≤ 32 | 7 |
| 32 < W ≤ 56 | 11 |
| 56 < W ≤ 80 | 13 |
| 80 < W ≤ 120 | 16 |

B. Construction live load: 20 lb/sf extended over the entire bridge width and 50 feet in longitudinal length centered on the finishing machine.

C. Removable deck cantilever forms with overhang brackets: 15 lb/sf

D. Live load at or near the outside edge of deck during deck placement: 75 lb/ft applied as a moving load over a length of 20 feet and positioned to produce the maximum response.

| **Modification for Non-Conventional Projects:** |
|---|
| Delete ***SDG*** 2.13.1 and insert the following:<br>List in the plans all construction loads assumed in the design of the structure. |

### 2.13.2 Substructures for Segmental Bridges

When the reduced load factor as allowed by ***LRFD*** [C5.14.2.3.4b] is used for substructures supporting segmental bridges, the reduced load factor for CLL shall not be less than 1.35 for Strength I and 1.25 for Strength V. A reduction in the load factor for WE is not allowed.

*Commentary: **LRFD** currently allows for a reduced load factor as appropriate for CLL and WE but has not defined a lower limit.*

# 3 SUBSTRUCTURE AND RETAINING, NOISE AND PERIMETER WALLS

## 3.1 GENERAL (Rev. 01/17)

A. This Chapter supplements ***LRFD*** Sections [2], [3], [5], [10], [11] and [15] and contains deviations from those sections. This Chapter also contains information and requirements related to soil properties, foundation types and design criteria, fender pile considerations, cofferdam design criteria to be used in the design of bridge structures and culvert design criteria. The term “noise wall” is used herein in lieu of the term “sound barrier” which is used in ***LRFD***.

B. The Structural Engineer, with input from the Geotechnical and Hydraulic Engineers, must determine the structure loads and the pile/shaft section or spread footing configuration. The Structural Engineer and the Geotechnical Engineer must consider constructability in the selection of the foundation system. Issues such as existing underground and overhead utilities, pile-type availability (including Buy America provisions), use of existing structures for construction equipment, phase construction, conflicts with existing piles and structures, effects on adjacent structures, etc. must be considered in evaluating foundation design.

C. Support all bridges on drilled shafts, spread footings, driven concrete piles or driven steel piles unless alternative foundations are authorized by the State Structures Design Engineer.

D. Design all substructures to incorporate bearings or provide fixed connections to the superstructure. Freyssinet or other concrete hinges are not permitted.

E. Determine pile and drilled shaft loads and design footings and bent caps using plan pile and drilled shaft locations. Detail footings and bent caps taking into consideration pile driving and drilled shaft placement tolerances per ***Specifications*** Section 455, see also ***SDM*** 12.5 and ***SDM*** 13.7.

F. Corrosion Mitigation Measures for Steel Piles and Wall Anchor Bars are as follows:

1. To account for a reduction in steel cross section due to corrosion, add coatings and/or sacrificial steel thickness to all permanent steel substructure and wall components as shown in ***SDG*** Table 3.1-1. Coat steel piles fabricated with weathering steel in the same manner as steel piles fabricated with conventional steels. Depict design ground surface or the design scour depth in plans.

2. Closed-End Pipe piles with a cast-in-place concrete core (full internal redundancy) may be used in any environment. The concrete core must extend the full length of the pile. The upper portion of the concrete core must be reinforced to resist all design loads without any contribution from the steel pipe. At a minimum, the reinforcement must extend from the pile head to the minimum tip elevation required for lateral stability. Design the concrete core using Class IV (Drilled Shaft) Concrete, 1'-0" or greater stirrup spacing, 2" clearance between the stirrups and the inside of the pipe, and a minimum clear distance between main

reinforcement of $3d_{max}$ (3 x maximum aggregate size) or 3", whichever is greater. The sacrificial thickness specified in ***SDG*** Table 3.1-1 and painting per ***Specifications*** Section 560 are not required for the steel pipe.

*Commentary: In this case the Closed-End Pipe pile is essentially a permanent casing and is not considered as a load carrying element. The design requirements for the reinforced concrete core are intended to result in proper concrete consolidation within the pile.*

G. The default foundation for Noise Walls and Perimeter Walls is auger cast-in-place (ACIP) piles, however, alternative foundations may be used if soil conditions warrant. ACIP piles may also be used to support miscellaneous structures.

H. For end bent design, perform the overturning analysis and establish the foundation forces using the following loads from the approach slab in combination with other appropriate loads:

- 50% of the dead load of the approach slab and any other approach slab supported components including the asphalt overlay, traffic/pedestrian railings, raised sidewalks, traffic separators, etc.
- The maximum reaction from an HL-93 live loading applied to the approach slab supported as specified in ***SDG*** 4.9.

Apply these loads at the centerline of the top of the end bent backwall. See ***SDG*** 3.13 and ***SDM*** Chapter 12 for additional end bent design and detailing requirements.

## Table 3.1-1Usage Limitations and Corrosion Mitigation Measures for Steel Piles and Wall Anchor Bars

| Steel Component | Embedment | Corrosion Protection | Minimum Required Sacrificial Thickness (inches) and Usage Limitations Based on Substructure Environmental Classification and Pile/Wall Anchor Bar Location | | | |
|---|---|---|---|---|---|---|
| | | | Slightly Aggressive | Moderately Aggressive | Extremely Aggressive | |
| | | | Land and/or Water | Land and/or Water | Land | Water |
| Pipe and H-Piles | Completely Buried | None[1] | 0.075 | 0.15 | 0.225[2] | Use Internally Redundant Pipe Piles Only, See ***SDG*** 3.1.F.2 |
| | Partially Buried | ***Specifications*** Section 560 | 0.09 | 0.18 | 0.27[2] | N/A |
| | | None[1] | 0.15 | 0.30 | Use Internally Redundant Pipe Piles Only, See ***SDG*** 3.1.F.2 | |
| Anchored or Cantilever Sheet Piles | All | ***Specifications*** Section 560 | 0.045 | 0.09 | 0.135 | |
| Wall Anchor Bars | All | See Footnote[3] | 0.09 | 0.18 | 0.27 | |

1. Include a note in the plans stating pipe and H-piles are not to be coated.
2. Steel H-piles or pipe piles without internal redundancy are only permitted if no surface water is present and if all of the following criteria are met for ground water and soil: Chlorides < 2000 ppm, Resistivity > 5000 Ohm-cm, and 4.9 < pH < 6.0. Otherwise, use Internally Redundant Pipe Piles, See ***SDG*** 3.1.F.2.
3. Use an epoxy-mastic heat shrink wrap or duct and grout to provide corrosion protection. At the connection to wall, use a coal tar-epoxy mastic coating.

*Commentary: The following criteria were used to determine the required sacrificial steel thickness:*

*Environmental Classification versus Corrosion Rate per side for partially buried piles and wall anchor bars:*

*Slightly Aggressive: 0.001 inches/year*

*Moderately Aggressive: 0.002 inches/year*

*Extremely Aggressive: 0.003 inches/year*

*Environmental Classification versus Corrosion Rate per side for completely buried piles:*

*Slightly Aggressive: 0.0005 inches/year*

*Moderately Aggressive: 0.001 inches/year*

*Extremely Aggressive: 0.0015 inches/year*

*Design Life:*

*Pipe and H-Piles without coating per Specifications Section 560:*

*75 years (sacrificial thickness required)*

*Pipe, Sheet and H-Piles with coating per Specifications Section 560 and Wall Anchor Bars with corrosion protection measures:*

*75 years (coating or corrosion protection measures provide 30 years and sacrificial thickness provides 45 years).*

*Application:*

*Partially buried Pipe Piles and H-Piles: Two Sided Attack at soil and/or water line.*

*Completely buried Pipe Piles and H-Piles: Two Sided Attack below ground line as shown in table above; single sided attack if Pipe Piles are concrete filled.*

*Sheet Piles: Single Sided Attack at soil and/or water line.*

## 3.2 GEOTECHNICAL REPORT

A. The District Geotechnical Engineer or the contracted Geotechnical firm will issue a Geotechnical Report for most projects. This report will include:

1. Detailed Soil conditions.
2. Foundation recommendations.
3. Design parameters.
4. Constructability considerations.
5. Background information that may assist the Structural Engineer in determining appropriate pile lengths.
6. Input data for COM624, FBPier, and other design programs when lateral loads are a major concern.

7. Completed FHWA Report ***Checklist and Guidelines for Review of Geotechnical Reports and Preliminary Plans and Specifications.***
8. Core boring drawings reflecting the foundation data acquired from field investigations.
9. Required Load tests.

B. The Geotechnical Engineer will contact the District Construction Office and District Geotechnical Engineer, as needed, to obtain local, site-specific foundation construction history.

C. The Report will be prepared in accordance with the Department's ***Soils and Foundations Handbook.*** Geotechnical Reports will conform to the ***FHWA Report Checklist and Guidelines for Review of Geotechnical Reports and Preliminary Plans and Specifications*** prepared by the Geotechnical and Materials Branch, FHWA, Washington, D.C., October 1985. Contact the District Geotechnical Engineer to receive a copy of this document.

D. In the event that a contracted geotechnical firm prepares the Geotechnical Report, both the State and District Geotechnical Engineers generally will review it for Category 2 Structures and the District Geotechnical Engineer for Category 1 Structures (see ***PPM***, Volume 1, Chapter 26 for category definitions).

E. Final acceptance of the report is contingent upon the District Geotechnical Engineer's approval. Concurrence by the State Geotechnical Engineer is required for all Category 2 Structures.

F. Verify the scope of services, as well as the proposed field and laboratory investigations, with the District Geotechnical Engineer before beginning any operations.

## 3.3 FOUNDATION SCOUR DESIGN [2.6]

A. This is a multi-discipline effort involving Geotechnical, Structures, and Hydraulics/ Coastal Engineers. The process described below will often require several iterations. The foundation design must satisfactorily address the various scour conditions, and furnish sufficient information for the Contractor to provide adequate equipment and construction procedures. These three engineering disciplines have specific responsibilities in considering scour as a step in the foundation design process.

1. The Structures Engineer determines the preliminary design configuration of a bridge structure utilizing all available geotechnical and hydraulic data and performs lateral stability evaluations for the applicable loadings described in ***SDG*** 2.12 Substructure Limit States (do not impose arbitrary deflection limits except on movable bridges). A preliminary lateral stability analysis generally will occur during the BDR phase of the project, and a final evaluation will occur subsequent to the selection of the final configurations. The Structures Engineer must apply sound engineering judgment in comparing results obtained from scour computations with available hydrological, hydraulic, and geotechnical data to achieve a reasonable and prudent design.

**Modification for Non-Conventional Projects:**

Delete ***SDG*** 3.3.A.1 and insert the following:

1. The Structures Engineer determines the preliminary design configuration of a bridge structure utilizing all available geotechnical and hydraulic data and performs lateral stability evaluations for the applicable loadings described in ***SDG*** 2.12 Substructure Limit States (do not impose arbitrary deflection limits except on movable bridges). The Structures Engineer must apply sound engineering judgment in comparing results obtained from scour computations with available hydrological, hydraulic, and geotechnical data to achieve a reasonable and prudent design.

2. The Hydraulics Engineer provides the predicted scour elevation and scour countermeasure recommendations using the criteria and methodologies described in Chapter 4 of the ***FDOT Drainage Manual.***

3. The Geotechnical Engineer provides the nominal axial (compression and tension) capacity curves, mechanical properties of the soil and foundation recommendations based on construction methods, pile availability, similar nearby projects, site access, etc.

B. Locate spread footings on soil or erodible rock so that the bottom of footing is below scour depths determined for the check flood for scour. Design spread footings on scour-resistant rock to maintain the integrity of the supporting rock.

   Locate the bottom of GRS abutments below scour depths determined for the check flood for scour.

   Design deep foundations with footings to place the top of the footing below the estimated contraction scour depth where practical to minimize obstruction to flood flows and resulting local scour.

   See also the FDOT ***Drainage Manual*** and ***Bridge Hydraulics Handbook*** for more information.

C. It is not necessary to consider the scour effects on temporary structures unless otherwise directed by the Department.

**Modification for Non-Conventional Projects:**

Delete ***SDG*** 3.3.C and see the RFP for requirements.

## 3.4 LATERAL LOAD [10.7.3.12][10.8.3.8]

Use a resistance factor of 1.0 for lateral analysis.

# 3.5 PILES

## 3.5.1 Prestressed Concrete Piles [5.13.4.4] (Rev. 01/17)

A. For prestressed piling not subjected to significant flexure under service or impact loading, design strand development in accordance with ***LRFD*** [5.11.4] and [5.8.2.3]. Bending that produces cracking in the pile, such as that resulting from ship impact loading, is considered significant. Comply with the tensile stress limits in ***LRFD*** [5.9.4.2.2] for all piling and apply the "severe corrosive conditions" to substructures with an Extremely Aggressive environment classification.

B. A 1-foot embedment is considered a pinned head condition. For the pinned pile head condition the strand development must be in accordance with ***LRFD*** [5.11.4] and [5.8.2.3].

C. For the standard, square, FDOT prestressed concrete piles (12-inch through 30-inch), a pile embedment of 48 inches into a reinforced concrete footing is considered adequate to develop the full bending capacity of the pile. The pile must be solid (or the pile void filled with structural concrete) for a length of no less than 8 feet (4 feet of embedment length plus 4 feet below the bottom of the pile cap).

D. Grouting a pipe or reinforcing bar cage into the void can strengthen a voided pile. With this detail, the full composite section capacity of the pile and pipe/cage can be developed. The required length of this composite pile section is a function of the loading but must be no less than 8 feet (4 feet below the bottom of the pile cap). To accommodate pile driving practices, specify ***Design Standards*** Index 20631 when 30" square piles with high moment capacity are required by design.

E. Bending capacity versus pile cap embedment length relationship for prestressed piles of widths or diameters larger than 30 inches will require custom designs based upon ***LRFD*** specifications, Department approval, and may require strand development/pile embedment tests.

*Commentary: The FDOT Structures Research Center conducted full scale testing of two 30-inch square concrete piles reinforced with prestressing steel and an embedded steel pipe. The piles, which were embedded 4 feet into a reinforced pile cap, developed the calculated theoretical bending strength of the section without strand slip. See* ***FDOT Report No 98-9 Testing of Pile-to-Pile Cap Moment Connection for 30" Prestressed Concrete Pipe-Pile.*** *It was concluded that the confinement effects of the pile cap serve to improve the bond characteristics of the strand.*

F. Minimum size and material requirements:

1. Fender Systems: 14-inch square piles with uncoated strand per ***Specifications*** Section 933, carbon steel reinforcing bar and spiral per ***Specifications*** Section 931, and concrete and admixtures per ***SDG*** Table 1.4.3-1 and ***SDG*** 1.4.3.G.2.

2. Vehicular and Pedestrian Bridges and Fishing Piers per Table 3.5.1-1:

## Table 3.5.1-1 Concrete Pile Size and Material Requirements

| Pile Location | | | Minimum Square Pile Size (inches) | | Minimum Cylinder Pile Diameter (inches) | Material Properties for All Pile Sizes[1] | | |
|---|---|---|---|---|---|---|---|---|
| | | | Vehicular Bridges | Pedestrian Bridges & Fishing Piers | | Strand Type | Spiral Type | Reinforcing Bar Type |
| Pile Bents | On land or in water in environments that are Extremely Aggressive due to chlorides | Widenings | 24[2] | 18 | 54 | Carbon steel, Spec 933 | Carbon steel, Spec 931 | Carbon steel, Spec 931 |
| | | New Construction | 24[3] | 18[3] | 54[3] | Carbon steel, Spec 933 | Carbon steel, Spec 931 | Carbon steel, Spec 931 |
| | | | 18 | 14 | 54 | CFRP, Spec 933 | CFRP, Spec 932 | GFRP or CFRP, Spec 932 |
| | | | | | | Stainless steel, Spec 933 | Stainless steel, Spec 931 | Stainless steel, Spec 931 |
| | On land or in water in all other environments | | 18 | 14 | 54 | Carbon steel, Spec 933 | Carbon steel, Spec 931 | Carbon steel, Spec 931 |
| Footings | In water (waterline or mudline) in environments that are Extremely Aggressive due to chlorides | | 24[2] | 18 | 54 | Carbon steel, Spec 933 | Carbon steel, Spec 931 | Carbon steel, Spec 931 |
| | On land or in water (waterline or mudline) in all other environments | | 18 | 14 | 54 | Carbon steel, Spec 933 | Carbon steel, Spec 931 | Carbon steel, Spec 931 |

1. See ***SDG*** Table 1.4.3-1 and ***SDG*** 1.4.3.G.2 for concrete class and admixture requirements.
2. If approved by the District Structures Maintenance Engineer, a minimum pile size of 18" may be allowed for minor widenings of substructures that will be exposed to wet/dry cycles. This decision is dependent upon site-specific conditions, anticipated structure life and the history of piles in the vicinity.
3. The use of FRP or stainless steel strand and reinforcing is preferred for use in splash zones. If approved by the District Structures Maintenance Engineer, piles of the minimum sizes shown and constructed using carbon steel strand, carbon steel reinforcing and concrete with admixtures may be acceptable for substructures that will be exposed to wet/dry cycles: This decision is dependent upon site-specific conditions, anticipated structure life, the history of piles in the vicinity and project specific requirements.

| **Modification for Non-Conventional Projects:** |
| --- |
| Delete Footnotes 2 and 3 of ***SDG*** Table 3.5.1-1and insert the following:<br>2 See the RFP for minimum pile size requirements.<br>3 See the RFP for minimum pile size and material requirements. |

G. The use of stinger piles will not be permitted unless approved by the State Structures Design Engineer.

## 3.5.2 Concrete Cylinder Piles

A. Plant produced, post-tensioned segmented cylinder piles (horizontally assembled, stressed and grouted) or pretensioned wet cast cylinder piles are allowed by the Department. Provide internal redundancy of segmented cylinder piles by the number of strands (maximum of 3 strands per duct.) If cylinder piles are included in the final design at a water location, provide alternate designs utilizing 54-inch and 60-inch cylinder pile sizes. If cylinder piles are used in the final design on a land project and the anticipated lengths are too long for transport by truck, provide alternate design for drilled shafts or square precast piles.

| **Modification for Non-Conventional Projects:** |
| --- |
| Delete ***SDG*** 3.5.2.A and insert the following:<br>A. Plant produced, post-tensioned segmented cylinder piles (horizontally assembled, stressed and grouted) or pretensioned wet cast cylinder piles are allowed by the Department. Provide internal redundancy of segmented cylinder piles by the number of strands (maximum of 3 strands per duct). |

B. For concrete cover on cylinder pile reinforcement, see ***SDG*** Table 1.4.2-1 Minimum Concrete Cover Requirements.

C. For cylinder piles in water and designed for vessel impact, fill the void with concrete to prevent puncture; see 3.11.3.F for required plug lengths.

D. For cylinder piles on land and within the clear zone, fill the void with concrete plug to prevent puncture from vehicular impact; see 3.11.3.E for required plug lengths.

## 3.5.3 Steel Sheet Piles

A. Permanent Steel Sheet Piles

1. Design and detail the sheet pile section sizes and shapes for both cold-rolled and hot-rolled sections where possible. Include the required additional sacrificial steel thickness when establishing the sheet pile section properties shown in the plans. When bending stress controls, design the cold-rolled section using flexural section properties that are 120% of the hot-rolled section values. When deflection controls, design the cold-rolled section using the hot rolled section properties.

**Modification for Non-Conventional Projects:**

Delete ***SDG*** 3.5.3.A.1 and insert the following:

1. Include the required additional sacrificial steel thickness when establishing the sheet pile section properties shown in the plans. When bending stress controls, design the cold-rolled section using flexural section properties that are 120% of the hot-rolled section values. When deflection controls, design the cold-rolled section using the hot rolled section properties.

2. Detail wall components such as caps and tie-backs to work with both the hot-rolled and cold-rolled sections where possible.

**Modification for Non-Conventional Projects:**

Delete ***SDG*** 3.5.3.A.2.

3. Indicate on the plans:
   a. minimum tip elevations (ft).
   b. minimum section modulus ($in^3$/ft).
   c. minimum moment of inertia ($in^4$/ft).

B. Critical Temporary Sheet Piles

1. Indicate on the plans:
   a. minimum tip elevations (ft).
   b. minimum section modulus ($in^3$/ft) for both hot-rolled and cold-rolled sections.
   c. minimum moment of inertia ($in^4$/ft) for both hot-rolled and cold-rolled sections.

**Modification for Non-Conventional Projects:**

Delete ***SDG*** 3.5.3.B.1 and insert the following:

1. Indicate on the plans:
   a. minimum tip elevations (ft).
   b. minimum section modulus ($in^3$/ft).
   c. minimum moment of inertia ($in^4$/ft).

2. When bending stress controls, design the cold-rolled section using flexural section properties that are at least 120% of the hot-rolled section values. When deflection controls, design the cold-rolled section using the hot rolled section properties.

3. Assure that standard shapes meeting the required properties are readily available from domestic suppliers.

**Modification for Non-Conventional Projects:**

Delete ***SDG*** 3.5.3.B.3.

*Commentary: Tests have shown that cold-rolled sheet pile sections fail in bending at about 85% of their full-section capacity, while hot-rolled sections develop full capacity. There is also some question on the availability of hot-rolled sheet piles; so, by showing the required properties for both types, the Contractor can furnish whichever is available.*

*The corrosion rate of weathering steel in contact with soil and water is the same as for ordinary carbon steel. The benefits, if any, associated with the use of weathering steel are questionable in partial burial applications like sheet pile walls. Therefore, weathering steel sheet piles are to be coated in the same manner as carbon steel sheet piles in accordance with* ***Specifications*** *Section 560.*

### 3.5.4 Minimum Pile Spacing and Clearances [10.7.1.2]

Delete the first sentence of ***LRFD*** [10.7.1.2] and substitute the following:
"Center-to-center pile spacing at and below the design ground elevation shall be not less than 3.0 pile diameters. For 10 inch diameter or smaller micropiles, the spacing shall be not less than 30 inches."

### 3.5.5 Downdrag [10.7.1.6.2]

A. Show the downdrag load on the plans.

B. For pile foundations, downdrag is the ultimate skin friction above the neutral point (the loading added to the pile due to settlement of the surrounding soils) plus the dynamic resistance above the neutral point (the resistance that must be overcome during the driving of the pile) minus the live load. The dynamic resistance typically equals 0.50 to 1.0 times the ultimate skin friction depending on the soil type. See the ***Soils and Foundations Handbook*** for guidance in estimating the proper multiplier.

C. Do not discount scourable soil layers to reduce the predicted downdrag.

*Commentary: Scour may or may not occur as predicted, therefore the presence of scourable soil layers must be accounted for.*

## 3.5.6 Resistance Factors [10.5.5] (Rev. 01/17)

Delete ***LRFD*** [Table 10.5.5.2.3-1] and substitute ***SDG*** Table 3.5.6-1 for piles.

### Table 3.5.6-1 Resistance Factors for Piles (all structures)

| Pile Type | Loading | Design Method | Construction QC Method | Resistance Factor, φ |
|---|---|---|---|---|
| Driven Piles with 100% Dynamic Testing | Compression | Davisson Capacity | 100% Dynamic Testing[1] | 0.75 |
| | | | 100% Dynamic Testing[1] & Static Load Testing | 0.85 |
| | | | 100% Dynamic Testing[1] & Statnamic Load Testing | 0.80 |
| | Uplift | Skin Friction | 100% Dynamic Testing[1] | 0.60 |
| | | | 100% Dynamic Testing[1] & Static Uplift Testing | 0.65 |
| Driven Piles with ≥5% Dynamic Testing | Compression | Davisson Capacity | Driving criteria based on Dynamic Testing and Analysis | 0.65 |
| | | | Driving criteria based on Dynamic Testing and Analysis & Static Load Testing | 0.75 |
| | | | Driving criteria based on Dynamic Testing and Analysis & Statnamic Load Testing | 0.70 |
| | Uplift | Skin Friction | Driving criteria based on Dynamic Testing and Analysis | 0.55 |
| | | | Driving criteria based on Dynamic Testing and Analysis & Static Uplift Testing | 0.60 |
| All piles | Lateral (Extreme Event) | FBPier[2] | Standard Specifications | 1.00 |
| | | | Lateral Load Test[3] | 1.00 |

1. With analysis of at least 10% of Piles in all Bents and Footings. Ensure all soil conditions encountered are analyzed.
2. Or comparable lateral analysis program.
3. When uncertain soil conditions are encountered.

*Commentary: The increased confidence in achieving the required nominal resistance when dynamic measurements are used to determine pile bearing of all piles is reflected in the use of an increased resistance factor.*

*EDC systems have not been developed for use with steel pipe piles or steel H-piles. EDC systems are not currently required for concrete cylinder piles because EDC systems have not been tested in cylinder piles. EDC systems are installed in solid and voided square prestressed concrete piles as shown in Design Standards Index 20602.*

### 3.5.7 Battered Piles [10.7.1.4]

A. Plumb piles are preferred; however, if the design requires battered piles, a single batter, either parallel or perpendicular to the centerline of the cap or footing, is preferred.

B. If the design requires a compound batter, orient the pile so that the direction of batter will be perpendicular to the face of the pile.

C. With input from the Geotechnical Engineer, the Structures Engineer must evaluate the effects of length and batter on the selected pile size. Do not exceed the following maximum batters, measured as the horizontal-to-vertical ratio, h:v:

1. End bents and abutments: 1:6
2. Piers without Ship Impact: 1:12
3. Intermediate bents: 1:6
4. Piers with Ship Impact: 1:4

*Commentary: When driven on a batter, the tips of long, slender piles tend to deflect downward due to gravity. This creates undesirable flexure stresses and may lead to pile failure, especially when driving through deep water and in very soft/loose soil. Hard subsoil layers can also deflect piles outward in the direction of batter resulting in pile breakage due to flexure. The feasibility of battered piles must be determined during the design phase.*

### 3.5.8 Minimum Tip Elevation [10.7.6]

A. The minimum pile tip elevation must be the deepest of the minimum elevations that satisfy uplift and lateral stability requirements for the three limit states. The minimum tip for lateral stability requirements must be established by the Structures Engineer with the concurrence of the Geotechnical Engineer. The minimum tip elevation may be set lower by the Geotechnical Engineer to ensure soft soil strata are penetrated to satisfy post construction settlement concerns.

B. Use the following procedure to establish the Minimum Tip Elevation for lateral stability requirements for each design ground surface (or design scour) elevation:

1. Establish a high end bearing resistance such that the pile tip will not settle due to axial forces;
2. Apply the controlling lateral load cases, raising the pile tips until the foundation becomes unstable. The pile is considered unstable when any one of the ***LRFD*** [10.7.6] requirements is not met;
3. Add 5 feet or 20% of the penetration, whichever is less, to the penetration at which the foundation becomes unstable. Confirm this embedment satisfies the lateral deflection limits at the Service Limit State.

*Commentary: The assumed soil/pile skin friction resistance is not modified using this procedure. It is assumed that the difference in axial capacity predicted during this portion of the design phase versus what is established during construction is due to end bearing only. Actual axial compressive resistance is assured by the bearing requirements in the Specifications.*

### 3.5.9 Anticipated Pile Lengths [10.7.3.3]

A. Test Pile Projects - Anticipated pile lengths are used only to estimate quantities and set test pile lengths. These lengths are determined by using the lower of the minimum tip elevations specified on the plans or the axial capacity elevations predicted by the pile capacity curves (SPT 97 Davisson Capacity Curves.) Pile order lengths will be determined during construction based on the results of the Test Piles.

| **Modification for Non-Conventional Projects:** |
|---|
| Delete ***SDG*** 3.5.9.A and insert the following:<br>A. Test Pile Projects - Anticipated pile lengths are used only to estimate quantities and set test pile lengths. These lengths are determined by using the lower of the minimum tip elevations specified on the plans or the axial capacity elevations predicted by the pile capacity curves (SPT 97 Davisson Capacity Curves.) |

B. Predetermined Pile Length Projects - The geotechnical engineer reviews the anticipated pile lengths and the core borings to determine a pile length which will provide sufficient capacity with a high degree of certainty. This length will normally be longer than the anticipated pile length.

C. Base the decision to provide predetermined pile lengths or to use test piles on overall project economy.

| **Modification for Non-Conventional Projects:** |
|---|
| Delete ***SDG*** 3.5.9.C. |

### 3.5.10 Test Piles [10.7.9]

A. Test piles include both static and dynamic load test piles, which are driven to determine soil capacity, pile-driving system, pile drivability, production pile lengths, and driving criteria.

B. Test Piles are required to determine the authorized pile lengths during construction when the geotechnical investigation does not provide enough information to predetermine pile lengths with a high degree of reliability. The decision to use test piles should be based on overall project economy.

| **Modification for Non-Conventional Projects:** |
|---|
| Delete ***SDG*** 3.5.10.B and insert the following:<br>B. Test Piles are required to determine the authorized pile lengths during construction when the geotechnical investigation does not provide enough information to predetermine pile lengths with a high degree of reliability. |

C. If Test Piles are omitted, Production Piles with Dynamic Load Tests are required for all projects unless, in the opinion of the District Geotechnical Engineer, pile-driving records for the existing structure include enough information (i.e., stroke length, hammer type, cushion type, etc.) to adequately determine the driving criteria.

D. When test piles are specified in the plans, at least one test pile must be located approximately every 200 feet of bridge length with a minimum of two test piles per bridge or per twin parallel bridges. These requirements apply for each size and pile type in the bridge except at end bents. For bascule piers and high-level crossings that require large footings or cofferdam-type foundations, specify at least one test pile at each pier. Consider maintenance of traffic requirements, required sequence of construction, geological conditions, and pile spacing when determining the location of test piles. For single bridges and twin parallel bridges that are constructed in phases, locate test piles in the first phase of construction. The Geotechnical Engineer must verify the suitability of the test pile locations.

**Modification for Non-Conventional Projects:**

Delete ***SDG*** 3.5.10.D and insert the following:

D. When test piles are specified in the plans, provide sufficient frequency of test piles to determine reliable pile lengths and installation requirements, with a minimum of two test piles per bridge or per twin parallel bridges. For bascule piers and high-level crossings that require large footings or cofferdam-type foundations, specify at least one test pile at each pier. Consider maintenance of traffic requirements, required sequence of construction, geological conditions, and pile spacing when determining the location of test piles. For single bridges and twin parallel bridges that are constructed in phases, test piles may be located in the first phase of construction. The Geotechnical Engineer must verify the suitability of the test pile locations.

E. When test piles are specified in the plans, test piles should be at least 15 feet longer than the estimated length of production piles. Additional length may be required by the load frame geometry when static load tests are used. The Structural Engineer must coordinate the recommended test pile lengths and locations with the District Geotechnical Engineer and Geotechnical Consultant, before finalization of the plans.

## 3.5.11 Load Tests [10.7.3.8][10.8.3.5.6]

A. Load test options include static load tests, dynamic load tests, Osterberg load tests, and Statnamic load tests. Both design phase and construction phase load testing should be investigated. When evaluating the benefits and costs of load tests, consider soil stratigraphy, design loads, foundation type and number, type of loading, testing equipment, and mobilization.

*Commentary: In general, the more variable the subsurface profile, the less cost-effective static load tests are. When soil variability is an issue, other options include additional field exploration, more laboratory samples, in-situ testing, and pullout tests.*

B. Static Load Test [10.7.3.8]: When static load tests are required, show on the plans: the number of required tests, the pile or shaft type and size, and test loads. Piles must be dynamically load tested before static load testing. Static load tests should test the pile or drilled shaft to failure as required in Section 455 of the ***Specifications***. The maximum loading of the static load test must exceed the nominal capacity of the pile or twice the factored design load, whichever is greater.

*Commentary: Test piles or drilled shafts can be subjected to static compression, tension, or lateral test loads. Static load tests may be desirable when foundation investigations reveal sites where the soils cause concern regarding the development of the required pile capacity at the desired depths, and/or the possibility that considerable cost savings will result if higher soil capacities can be obtained. Furthermore, static load tests will reduce the driving effort since a higher Performance Factor is applied to the Ultimate Bearing Capacity formula.*

C. Dynamic Load Test [10.7.3.8.3]: All test piles must have dynamic load tests. Indicate this requirement with a note on the foundation layout sheet.

*Commentary: Dynamic load testing of piles employs strain transducers and accelerometers to measure pile force and acceleration during driving operations. A Pile Driving Analyzer (PDA) unit (or similar) is used for this purpose.*

D. Statnamic Load Test: When Statnamic load tests are required, show on the plans: the number of required tests, the size and type of pile or shaft, and test loads. Piles must be dynamically load tested before Statnamic load testing. Equivalent static load tests derived from Statnamic load tests shall test the pile or drilled shaft to failure in accordance with Section 455 of the ***Specifications***. The maximum derived static loading must exceed the nominal capacity of the pile or twice the factored design load, whichever is greater.

E. Special Considerations: Load testing of foundations that will be subjected to subsequent scour activity requires special attention. The necessity of isolating the resistance of the scourable material from the load test results must be considered.

## 3.5.12 Pile Driving Resistance [10.7.3.8.6]

A. The Geotechnical Engineer calculates the required nominal bearing resistance ($R_n$) as:

$$\textbf{(Factored Design Load + Net Scour + Downdrag)} / \varphi < R_n \quad \text{[Eq. 3-1]}$$

Where: $\varphi$ is the resistance factor taken from ***SDG*** Table 3.5.6-1.

B. Typically, $R_n$ will be the required driving resistance. Nominal bearing resistance values given in the Pile Data Table must not exceed the following values unless specific justification is provided and accepted by the Department's District Geotechnical Engineer for Category 1 structures or the State Geotechnical Engineer for Category 2 structures:

| **Modification for Non-Conventional Projects:** |
|---|
| Delete ***SDG*** 3.5.12.B and insert the following:<br>B. Typically, $R_n$ will be the required driving resistance. |

## Table 3.5.12-1 Maximum Pile Driving Resistance

| Pile Size[1] | Resistance (tons) |
|---|---|
| 14 inch | 200 |
| 18 inch | 300 |
| 20 inch | 360 |
| 24 inch | 450 |
| 30 inch | 600 |
| 54 inch concrete cylinder | 1550 |
| 60 inch concrete cylinder | 2000 |

1. See ***SDG*** 3.5.1.F for applicability.

| **Modification for Non-Conventional Projects:** |
|---|
| Delete ***SDG*** Table 3.5.12-1 and insert the following:<br>14 inch square piles can only be used in pedestrian bridge applications. |

C. When the minimum tip requirements govern over bearing requirements, construction methods may need to be modified so that pile-driving resistance never exceeds the values given above. Construction methods such as preforming or jetting may be required at these locations. See the Pile Data Table in the ***SDM*** and ***Instructions for Design Standards (IDS)***.

| **Modification for Non-Conventional Projects:** |
|---|
| Delete ***SDG*** 3.5.12.C. |

D. The values listed above are based on upper bound driving resistance of typical driving equipment. The maximum pile driving resistance values listed above should not be considered default values for design. These values may not be achievable in certain areas of Florida based on subsoil conditions. Local experience may dictate designs utilizing substantially reduced nominal bearing resistance. Contact the District Geotechnical Engineer for guidance in the project area.

| **Modification for Non-Conventional Projects:** |
|---|
| Delete ***SDG*** 3.5.12.D. |

E. Design all piles within the same pier or bent to have the same required driving resistance, except piles in wingwalls of end bents may be designed to a lower driving resistance.

### 3.5.13 Pile Jetting and Preforming

A. When jetting or preforming is allowed, the depth of jetting or preforming must comply with all the design criteria. For projects with scour, jetting or preforming will not normally be permitted below the 100-year scour elevation $EL_{100}$. If jetting or preforming elevations are deeper than $EL_{100}$, the lateral confinement around the pile must be restored to $EL_{100}$. If jetting or preforming is utilized, the Net Scour Resistance to that depth is assumed to be equal to 0.0 kips (provided the hole remains open or continuous jetting is being done).

B. Verify that jetting will not violate environmental permits before specifying it in the contract documents.

### 3.5.14 Pile Data Table (Rev. 01/17)

A. For projects with test piles include in the plans a Pile Data Table and notes as shown in the ***Instructions for Design Standards (IDS)***, Index 20600 or 22600 as appropriate for the environment.

B. For projects without test piles include in the plans a modified Pile Data Table and notes as shown in the ***Instructions for Design Standards (IDS)***, Index 20600 or 22600 as appropriate for the environment.

C. For items that do not apply, place "N/A" in the column but do not revise or modify the table.

D. Round loads up to the nearest ton. Round minimum tip elevations down and pile lengths up to the nearest foot. Round cut-off elevations to the nearest tenth-of-a foot.

E. The Pile Data Table is not required in the Geotechnical Report; however, the Geotechnical Engineer of Record must review the information shown on the plans for these tables.

F. Use Equation 3-1 to determine the required Nominal Bearing Resistance value $(R_n)$ for the Pile Data Table.

### 3.5.15 Plan Notes

Additional Plan Notes:

1. Minimum Tip Elevation is required _____ (reason must be completed by designer, for example: "for lateral stability", "to minimize post-construction settlements" or "for required tension capacity").

2. When a required jetting or preformed elevation is not shown on the table, do not jet or preform pile locations without prior written approval of the District Geotechnical Engineer. Do not advance jets or preformed pile holes deeper than the jetting or preformed elevations shown on the table without the prior approval of the District Geotechnical Engineer. If actual jetting or preforming elevations differ from those shown on the table, the District Geotechnical Engineer will determine the required driving resistance.

### 3.5.16 Fender Piles

See ***SDG*** 3.14 Fender Systems

### 3.5.17 Concrete Piling Spliced with Steel Devices

Concrete piling spliced with steel devices (e.g. welded connection or locking devices) shall only be used where the splices will be at least 4 feet below the lower of the design ground surface or the design scour depth.

## 3.6 DRILLED SHAFT FOUNDATIONS

### 3.6.1 Minimum Sizes (Rev. 01/17)

The minimum diameter for drilled shaft bridge foundations is 42 inches except that nonredundant shafts as defined in ***SDG*** 3.6.9 must be no less than 48 inches in diameter. Shafts for all miscellaneous structures (e.g. mast arms, noise walls, etc.) shall be in accordance with ***Volume 3***.

*Commentary: The minimum drilled shaft diameter for bridges with redundant foundations was increased from 36" to 42" to alleviate construction difficulties observed on several projects. Rebar cages for 42" shafts have less flexibility issues during installation, pose less congestion and consolidation issues during concreting and permit more tremie options than cages for 36" shafts.*

### 3.6.2 Downdrag

A. Show the downdrag load on the plans.

B. For drilled shaft foundations, "downdrag" is the ultimate skin friction above the neutral point (the loading added to the drilled shaft due to settlement of the surrounding soils) minus the live load.

C. Do not discount scourable soil layers to reduce the predicted downdrag.

*Commentary: Scour may or may not occur as predicted, therefore the presence of scourable soil layers must be accounted for.*

### 3.6.3 Resistance Factors [10.5.5]

Delete ***LRFD*** [Table 10.5.5.2.4-1] and substitute ***SDG*** Table 3.6.3-1 for drilled shafts.

**Table 3.6.3-1 Resistance Factors for Drilled Shafts (Bridge Foundations)**

| Loading | Design Method | Construction QC Method | Resistance Factor, φ | |
|---|---|---|---|---|
| | | | Redundant | Non-redundant[1] |
| Compression | For soil: FHWA alpha or beta method [2] | Specifications | 0.6 | 0.5 |
| | For rock socket: McVay's method [2] neglecting end bearing | Specifications | 0.6 | 0.5 |
| | For rock socket: McVay's method [2] including 1/3 end bearing | Specifications | 0.55 | 0.45 |
| | For rock socket: McVay's method [2] | Statnamic Load Testing | 0.7 | 0.6 |
| | For rock socket: McVay's method [2] | Static Load Testing | 0.75 | 0.65 |
| Uplift | For clay: FHWA alpha method[3] | Specifications | 0.35 | 0.25 |
| | For sand: FHWA beta method [3] | Specifications | 0.45 | 0.35 |
| | For rock socket: McVay's method [2] | Specifications | 0.5 | 0.4 |
| Lateral [4] | FBPier [5] | Specifications Or Lateral Load Test [6] | 1.00 | 0.9 |

1. As defined in ***SDG*** 3.6.9.
2. Refer to FDOT ***Soils and Foundation Handbook***.
3. Refer to FHWA-IF-99-025, soils with N<15 correction suggested by O'Neill.
4. Extreme event.
5. Or comparable lateral analysis program.
6. When uncertain conditions are encountered.

*Commentary: **LRFD** resistance factors are based on the probability of failure ($P_f$) of an element or group of elements resisting structural loads. When resistance factors were calibrated, the state of practice utilized redundant drilled shaft foundations, therefore, the design $P_f$ for each drilled shaft is larger than the design $P_f$ for the entire bent or pier because multiple drilled shafts would have to fail before the bent or pier could fail.*

*In a nonredundant foundation, the $P_f$ for each foundation element shall be the design $P_f$ for the entire bent or pier because of the consequence of failure. Therefore, the resistance factor for nonredundant foundation element shall be smaller than that of the redundant foundation units.*

*The resistance factors for nonredundant drilled shaft foundations have not yet been calibrated. Due to the consequences of failure for this foundation type, the values for nonredundant drilled shafts shown in Table 3.6.3-1 have been reduced by 0.10 in general accordance with NCHRP Report 507.*

*When using the resistance factors associated with load tests, the designer must determine the number of load tests that will be required. For a project site with a fairly uniform subsurface, it may be appropriate to specify relatively few load tests, however, multiple load tests may be necessary at a site with variable subsoil conditions. A load test may be required for each different soil profile if a representative soil profile for the site cannot be established.*

## 3.6.4 Minimum Tip Elevation [10.8.1.5]

A. The minimum drilled shaft tip elevation must be the deepest of the minimum elevations that satisfy all axial capacity and lateral stability requirements for the three limit states. The minimum tip for lateral stability requirements must be established by the Structures Engineer with the concurrence of the Geotechnical Engineer. The minimum tip elevation may be set lower by the Geotechnical Engineer to ensure axial compressive and tensile requirements are satisfied and to ensure soft soil strata are penetrated to satisfy post construction settlement concerns.

B. Use the following procedure to establish the Minimum Tip Elevation for lateral stability requirements for each design ground surface (or design scour) elevation:

   1. Establish a high end bearing resistance such that the shaft tip will not settle due to axial forces;
   2. Apply the controlling lateral load cases, raising the shaft tips until the foundation becomes unstable;
   3. Add 5 feet or 20% of the penetration, whichever is less, to the penetration at which the foundation becomes unstable.

*Commentary: The assumed soil/shaft side resistance is not modified using this procedure. It is assumed that the difference in axial resistance predicted during this portion of the design phase versus what is established during construction is due to end bearing only.*

## 3.6.5 Load Tests

See ***SDG*** 3.5.10

## 3.6.6 Drilled Shaft Data Table

A. For projects with drilled shafts, include in the plans, a Drilled Shaft Data Table. See ***SDM*** Chapter 11.

B. For items that do not apply, place "N/A" in the column but do not revise or modify the table.

C. Round loads up to the next ton. Round elevations down to the nearest foot.

D. The "Drilled Shaft Data Table" is not required in the Geotechnical Report; however, the Geotechnical Engineer of Record must review the information shown on the plans for these tables.

E. The Min. Top of Rock Elevation is the highest elevation determined by the Geotechnical Engineer where the material qualities meet or exceed those which are suitable to be included in the rock socket.

   1. In somewhat variable conditions where pilot holes will be required, the Geotechnical Engineer should provide a best estimate of the elevation.

   2. In highly variable conditions where pilot holes will be required, use an asterisk " * " in place of the elevation, and refer to ***SDG*** 3.6.7.C.

F. The Geotechnical Engineer calculated the required nominal bearing resistance ($R_n$) as: (Factored Design Load + Downdrag) / Ø < $R_n$

G. The Geotechnical Engineer calculated the required nominal uplift resistance ($R_{n\text{-uplift}}$) as: (Factored Design Load -Factored Effective Shaft Weight) / Ø < $R_{n\text{-uplift}}$

## 3.6.7 Plan Notes

A. Additional Plan Notes below the Drilled Shaft Data Table:

   1. The Tip Elevation is the highest elevation the shaft tip should be constructed unless load test data, rock core tests, or other geotechnical test data obtained during pilot holes allows the Engineer to authorize a different Tip Elevation.

   2. The Min. Tip Elevation is required for lateral stability.

   3. Rock encountered above the Min. Top of Rock Elevation is considered unsuitable for inclusion in the rock socket length. The Engineer may revise this elevation based on pilot holes, if performed.

   4. Inspect all shafts considered nonredundant using the SID or an approved alternate down-hole camera to verify shaft bottom cleanliness at the time of concreting. Test all nonredundant drilled shafts using cross-hole-sonic logging (CSL).

B. For Drilled Shaft projects with lateral load tests, add the following to Note 2 above:

   The Engineer may revise this elevation based on pilot holes or lateral load tests, if performed.

C. For Drilled Shaft projects in highly variable soil conditions with pilot holes required, refer to ***SDG*** 3.6.6.E and replace Note 3 above with:

   The District Geotechnical Engineer will provide the Min. Top of Rock Elevation based on the required pilot holes.

| **Modification for Non-Conventional Projects:** |
| --- |
| Delete ***SDG*** 3.6.7.C. and insert the following:<br>C. For Drilled Shaft projects in highly variable soil conditions, complete all borings and testing before finalizing the design. |

D. For Drilled Shafts with pressure-grouted tips, add the following note:

NOTE: A.H. Beck Foundation Company, Inc. owns U.S. Patent No. 6,371,698 entitled "Post-Stressed Pier." You are advised that the Department has, in any case, obtained a patent license agreement with A.H. Beck Foundation Company, Inc. that provides royalty free use of U.S. Patent No. 6,371,698 in the design, manufacture and construction of the post-grouted drilled shafts on this Department project, and no royalties will be asserted by A.H. Beck Foundation Company, Inc. against the Department, the prime contractor, subcontractors, manufacturers, or suppliers as to the post-grouted drilled shafts for this project. For more information as to U.S. Patent No. 6,371,698, contact:

A.H. Beck Foundation, Inc.
5123 Blanco Road
San Antonio, Texas 78216
Phone (210) 342-5261

## 3.6.8 Construction Joints

For drilled shafts used in bents located in water containing more than 2,000 ppm chloride (see ***SDG*** 1.3.3), detail the shaft to extend without a construction joint a minimum of 12 feet above the Mean High Water elevation or bottom of the bent cap, whichever is lower.

*Commentary: It is preferred that taller shafts extend to the bottom of the bent cap without a construction joint.*

## 3.6.9 Nonredundant Drilled Shaft Bridge Foundations

A. Refer to the ***Soils and Foundations Handbook*** for special design phase investigation and construction phase testing and inspection requirements for nonredundant drilled shafts.

B. In addition to those shafts deemed nonredundant per ***LRFD*** [1.3.4], drilled shafts supporting the following bridge substructure units are considered nonredundant:

1. Two column bents and piers with one or both of the columns supported by one or two drilled shafts.
2. Single column piers with a total of three or fewer drilled shafts.
3. Portions of bents and piers for bridge widenings with a total of two or fewer drilled shafts regardless of whether they are connected to an existing bent or pier.

4. Portions of bents and piers constructed in phases with a total of two or fewer drilled shafts in service at the completion of the phase regardless of whether they are connected to an existing bent or pier.
5. All other bents and piers with a total of two or fewer drilled shafts.

C. Add a note to the Foundation Layout Sheet(s) requiring additional pilot holes at nonredundant drilled shaft locations when the original design phase borings are insufficient. See the ***Soils and Foundations Handbook*** for requirements. Require the pilot holes to be performed two weeks prior to shaft excavation. Require additional pilot holes during construction, where shafts are lengthened or shaft locations are modified.

D. For all nonredundant drilled shafts, add Note 4 as shown in ***SDG*** 3.6.7, paragraph A to ensure shaft cleanliness at the time of concrete placement and integrity of the completed shaft.

## 3.6.10 Minimum Reinforcement Spacing [5.13.4.5.2, 10.8.3.9.3]

A. For drilled shafts, provide a minimum clear distance between reinforcement of six inches to allow for proper concrete consolidation.

B. Double-cage shafts will not be permitted unless approved by the State Geotechnical Engineer. Inner column cages that develop column reinforcing steel at the top of the drilled shaft are exempted from this requirement.

*Commentary: Multiple reinforcing cages in drilled shafts create constructability problems and are highly discouraged. A minimum 12-inch spacing between cages will be required when double cages are proposed for consideration in lieu of a larger diameter shaft.*

| **Modification for Non-Conventional Projects:** |
|---|
| Delete ***SDG*** 3.6.10.B. |

## 3.6.11 Axial Resistance of Drilled Shafts [5.7.4.4]

For determining the factored axial resistance for drilled shafts as compression members per ***LRFD*** [5.7.4.4], reduce the gross area of section, $A_g$ to the area bounded by the outside diameter of the spiral or tie plus 2 inches of concrete cover.

*Commentary: The Department requires that 6 inches of concrete cover be detailed for all drilled shafts. Applying the construction tolerances listed in the Specifications, a minimum cover of 4.5 inches is obtained. The structural equations given in **LRFD** [5.7.4.4] were based on testing performed on columns with a concrete cover less than this.*

## 3.7 COFFERDAMS AND SEALS

A. When showing seal dimensions in the plans, show the maximum water elevation assumed for the seal design. Design the seal concrete thickness using the exceeding pressure obtained from flow net analysis performed by the Geotechnical Engineer. In the absence of a flow net analysis, use the maximum differential water head.

B. For design of the cofferdam seal, use a Load Factor of 1.0 and assume the maximum service load stresses from ***SDG*** Table 3.7-1 which apply at the time of complete dewatering of the cofferdam.

C. In the event greater stress values are required, employ mechanical connectors such as weldments or shear connectors for the contact surfaces of the foundation and seal. When connectors are used to increase shear capacity, detail the connections and note the locations on the drawings. Provide substantiating calculations.

### Table 3.7-1 Cofferdam Design Values

| **Maximum service load stresses at time of complete dewatering of the cofferdam** | |
|---|---|
| Maximum tension in seal concrete from hydrostatic pressure | 250 psi* |
| Adhesive shear stress between seal concrete and concrete piles or shafts | 75 psi* |
| Adhesive shear stress between seal concrete and steel piles or casings | 36 psi* |
| *Values have been adjusted for appropriate Resistance Factors. | |

*Commentary: Generally, cofferdams are designed and detailed by the Contractor and reviewed by the EOR as a shop drawing. In many instances, however, the EOR must design the seal because it constitutes a significant load for the foundation design, and a seal quantity is often required for bidding purposes.*

## 3.8 SPREAD FOOTINGS [10.5.5][10.5.6]

A. The Geotechnical Report will provide the maximum soil pressures, the minimum footing widths, the minimum footing embedment, and the ***LRFD*** [Table 10.5.5.2.2-1] Resistance Factors ($\varphi$).

B. Determine the factored design load and proportion the footings to provide the most cost effective design without exceeding the recommended maximum soil pressures. Communicate with the Geotechnical Engineer to ensure that settlements due to service loads do not exceed the tolerable limits.

C. Verify sliding, overturning, and rotational stability of the footings.

## 3.9 MASS CONCRETE

See ***SDG*** 1.4.4 for Mass Concrete requirements.

## 3.10 CRACK CONTROL (Rev. 01/17)

A. Limit service tension stresses in the outer layer of longitudinal reinforcing steel for all mildly reinforced pier columns, pier caps and bent caps under construction loading and Service III Loading to 24 ksi regardless of the grade of steel used. The service biaxial bending tension stresses in longitudinal column reinforcing may be approximated by taking the square root of the sum of the squares in each direction.

*Commentary: The tensile limit 24 ksi for mild reinforcing, combined with proper distribution of reinforcement, is intended to ensure the durability of pier columns, pier caps and bent caps by limiting crack widths.*

B. Long Walls and other similar construction:

1. Limit the length of a section to a maximum of 30 feet between vertical construction joints. See the limits of concrete pours in tall piers (***SDG*** 3.11).
2. Clearly detail required construction joints on the plans.
3. Specify construction or expansion joints fitted with a water barrier when necessary to prevent water leakage.

C. Footings: Specify that footings be cast monolithically. Attach struts and other large attachments as secondary castings.

D. Keyways: Do not place keyways in horizontal construction joints except that a keyway will be used at the junction of a cast-in-place concrete wall and footing. Provide keyways at formed surfaces of vertical construction joints and elsewhere as necessary to transfer applied loads from one cast section to an adjacent, second pour. Specify or detail trapezoidal keyways for ease of forming and stripping. For example, a typical joint must have a keyway about 2-inches deep and about 6-inches wide (or one third the thickness of the member for members less than 18-inches in thickness) running the full length.

E. In ***LRFD*** [5.7.3.4], the maximum service limit state stress ($f_{ss}$) is 0.80 $F_y$ for steel reinforcement with $F_y$ < 75 ksi. Use a Class 1 exposure condition for all location/ components, except those listed as requiring a Class 2 exposure condition and the portions of box culverts described in ***SDG*** 3.15.8. Any concrete cover thickness greater than the minimum required by ***SDG*** Table 1.4.2-1 may be neglected when calculating $\mathbf{d_c}$ and **h**, if a Class 2 exposure condition is used. A Class 2 exposure condition may be used in lieu of a Class 1 exposure condition when the minimum concrete cover required by ***SDG*** Table 1.4.2-1 is used.

## 3.11 PIER, CAP, COLUMN, AND FOOTING DESIGN

### 3.11.1 General (Rev. 01/17)

A. All voided substructures must be sealed from possible sources of leaks and contain free-exiting drains or weep-holes to drain away water that may collect from any source including condensation.

B. Drains in voided piers may be formed using 2-inch diameter permanent plastic pipes set flush with the top of the bottom slab or solid section. Slope interior top of solid base toward drains or weep-holes. Provide weep-holes with vermin guards. Show in the Contract Drawings, locations and details for drains taking into account bridge grade and cross-slope.

C. Provide inspection access for all hollow piers. See Other Box Sections in ***SDG*** 4.6.2.

D. For precast struts set into, cast into or placed against cast-in-place concrete within the splash zone, maintain concrete cover over the entire interfacing surfaces of both the precast strut and the cast-in-place concrete. Connect precast struts to cast-in-place concrete using only stainless steel or non-metallic reinforcement.

*Commentary: Experience has shown that C.I.P. concrete pulls away from a precast strut at their interface allowing water and/or chlorides to enter and initiate corrosion.*

E. On structures over water, vertical post-tensioning strand or parallel wire tendons (except in cylinder piles) cannot extend below an elevation that is 12 feet above Mean High Water Level (MHW) or Normal High Water Level (NHW), regardless of the Environmental Classification. Post-tensioning bar tendons are excluded from this restriction.

F. Post-tensioning applied to piers must be located within a voided or hollow cross section and not external to the pier. Where tendons extend from the underside of pier caps into hollow sections, provide a one half-inch by one half-inch drip recess around the tendon duct.

G. Design and detail post-tensioned substructure elements to meet or exceed the minimum number of tendons in accordance with Table 3.11.1-1.

H. Design and detail post-tensioned substructure elements to meet or exceed the minimum center-to-center duct spacings in accordance with Table 3.11.1-2 using duct diameters shown in ***SDG*** Table 1.11.4-1.

I. Design and detail post-tensioned substructure elements to meet or exceed the minimum dimensions in accordance with Table 3.11.1-3.

J. For additional post-tensioning requirements see ***SDG*** 1.11.

## Table 3.11.1-1 Minimum Number of Tendons for Post-Tensioned Substructure Elements

| Post-Tensioned Bridge Element | Minimum Number of Tendons |
|---|---|
| Hammerhead Pier Cap | 6 |
| Straddle Beam Cap | |
| Framed Straddle Pier Column | |
| C-Pier Column and Cap | |
| All other Pier Types and Substructure Components Not Listed | |
| C-Pier Footing | 8 |
| Hollow Cast Pier Column | |

## Table 3.11.1-2 Minimum Center-to-Center Duct Spacing

| Post-Tensioned Substructure Element | Minimum Center-to-Center Vertical Spacing "d" between Ducts | Minimum Center To Center Horizontal Spacing "s" between Ducts[1] |
|---|---|---|
| C.I.P. Hammerhead, Straddle Beam, Pile/Drilled Shaft or C-Pier Cap (see ***SDG*** Figure 3.11.1-1) | Outer duct diameter plus 1.5 times maximum aggregate size, or outer duct diameter plus 2-inches, whichever is greater. | Outer Duct diameter plus 3-inches. |
| Precast Segmental Hammerhead, Straddle Beam, Pile/Drilled Shaft or C-Pier Cap (see ***SDG*** Figure 3.11.1-1) | 2 times outer duct diameter plus 1-inch, or outer segmental coupler diameter plus 2-inches, whichever is greater. | 2 times outer duct diameter plus 1-inch, or outer segmental coupler diameter plus 2-inches, whichever is greater. |
| C.I.P. Solid or Hollow Pier Column (see ***SDG*** Figure 3.11.1-2) | N/A | Outer duct diameter plus 3-inches |
| Precast Segmental Solid or Hollow Pier Column (see ***SDG*** Figure 3.11.1-2) | N/A | 2 times outer duct diameter plus 1-inch, or outer segmental coupler diameter plus 2-inches, whichever is greater. |

1. Usually ducts are placed in-line with P.T. anchors. P.T. anchor spacing is typically controlled by the size of the spirals and anchor plates.

## Figure 3.11.1-1 Section Through Post-Tensioned Pier/Beam Caps Showing Duct Spacings

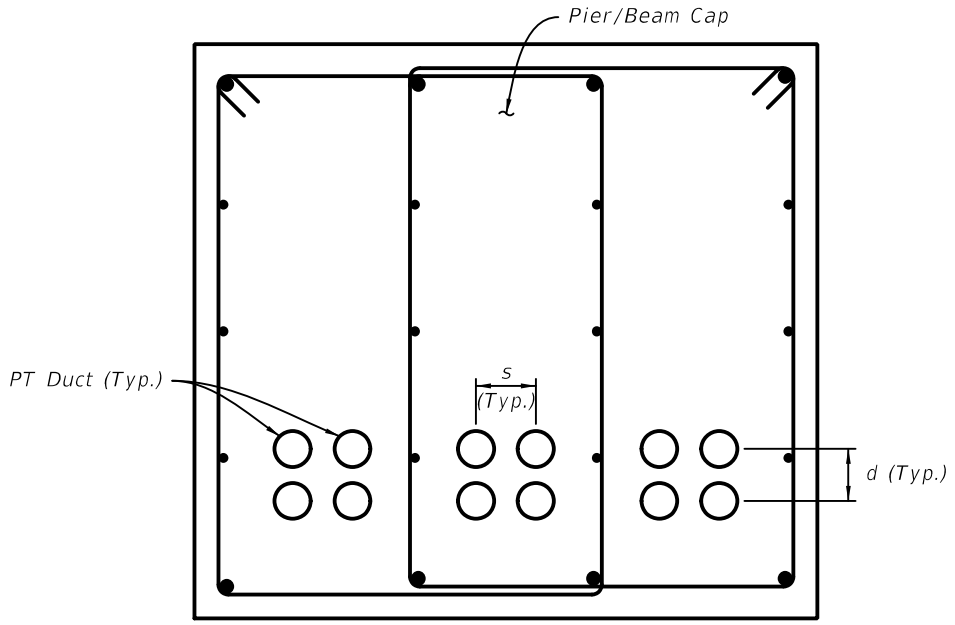


## Figure 3.11.1-2 Section Through Post-Tensioned Columns Showing Duct Spacings

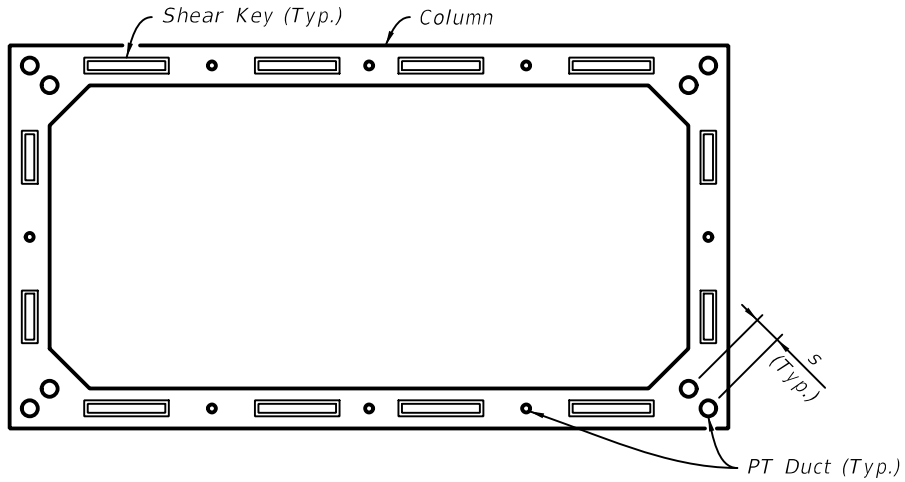


HOLLOW PRECAST COLUMN SHOWN; SOLID PRECAST AND HOLLOW OR SOLID C.I.P. COLUMNS SIMILAR

## Table 3.11.1-3 Minimum Dimensions for Substructure Elements Containing Post-Tensioning Tendons

| Post-Tensioned Substructure Element | Minimum Dimension |
|---|---|
| Pier Caps with rectangular or Inverted-T cross sections, and Webs of Pier Caps with I-Girder and Box-Girder cross sections | For single column of ducts: Sufficient width to accommodate anchorage placement, 8 inches thick or outer duct diameter plus 2 x cover plus 2 x stirrup dimension (deformed bar diameter); whichever is greater.<br>For two or more ducts set side by side: Sufficient width to accommodate anchorage placement, concrete covers, longitudinal PT ducts, 3 inch min. horizontal spacing between ducts, reinforcing (deformed bar diameters), and allowances for construction tolerances. |
| End Blocks of Pier Caps with I-Girder cross sections | Length (including transition) not less than 1.5 x depth of pier cap |
| Walls of Pier Columns with internal post-tensioning | 12 inches |
| Walls of Pier Columns with external post-tensioning | 10 inches |

## 3.11.2 Footing Design

A. Size footings such that the effective depth of concrete is sufficient to resist shear without the requirement for shear reinforcement per ***LRFD*** [5.13.3.6].

| **Modification for Non-Conventional Projects:** |
|---|
| Delete ***SDG*** 3.11.2.A. |

B. For water crossings:

1. Locate the bottom of all footings, excluding seals, a minimum of 1 foot below MLW or NLW. When tides consistently expose piles for extended periods, contact SMO for direction.

| **Modification for Non-Conventional Projects:** |
|---|
| Delete ***SDG*** 3.11.2.B.1 and insert the following:<br>1. Locate the bottom of all footings, excluding seals, a minimum of 1 foot below MLW or NLW. See the RFP for additional requirements. |

2. Locate the top of waterline footings a minimum of 1 foot above MHW or NHW.

3. For submerged footings, consider the type of boating traffic and waterway use when determining the clearance between MLW or NLW and the top of footing.
4. In navigation channels coordinate all footing elevations with the Coast Guard as required.
5. For footings with plumb piles, connect stay-in-place precast "bathtub" forms or precast seals to cast-in-place footings using stainless steel or non-metallic reinforcement. For "bathtub" forms, a mechanical connection across the interface between the form and the footing, e.g. shear keys, may be used in lieu of reinforcement.

C. Completely bury all spread, pile supported or drilled shaft supported footings, grade beams and other similar components used for land piers. Provide a minimum of three feet from the finish grade to the top of the footing. Provide this minimum embedment for footings buried in sloped embankments as shown in Figure 3.11.2-1. Mounding of fill above the adjacent finish grade so as to bury a footing is not permitted.

**Figure 3.11.2-1 Minimum Footing Depth on Sloped Embankments**

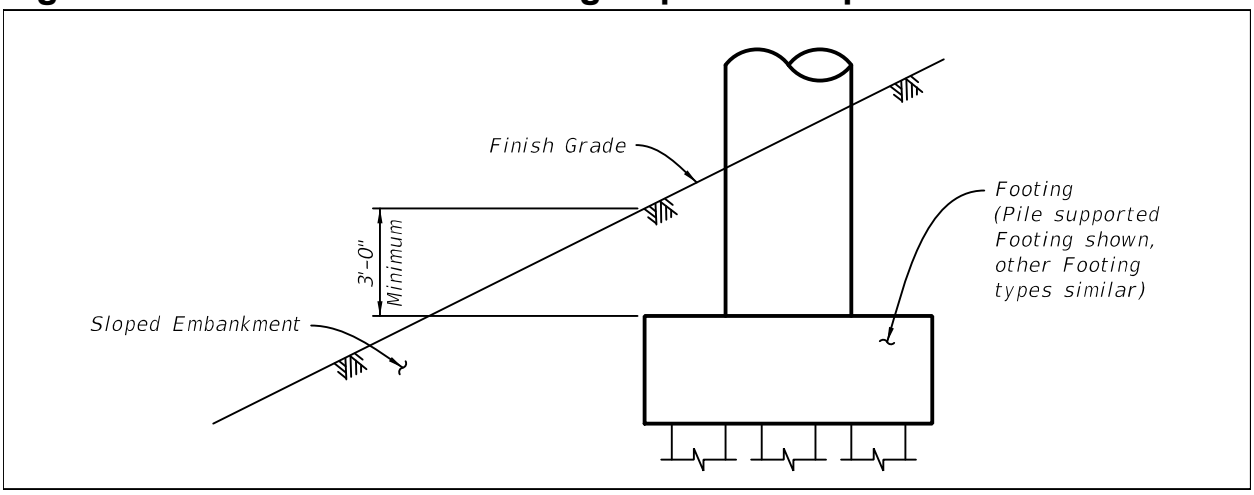


## 3.11.3 Column Design

A. For tall piers or columns, detail construction joints to limit concrete lifts to 25 feet. When approved by the Department, a maximum lift of 30 feet may be allowed to avoid successive small lifts (less than approximately 16 feet) which could result in vertical bar splice conflicts or unnecessary splice length penalties.Coordinate the lift heights and construction joint locations with the concrete placement requirements of the specifications.

B. Detail splices for vertical reinforcing at every horizontal construction joint; except that the splice requirement may be disregarded for any lift of 10 feet or less.

| **Modification for Non-Conventional Projects:** |
| --- |
| Delete ***SDG*** 3.11.3.A and B. |

C. Precast pier sections with spliced sleeve connections for mild reinforcing are allowed.

D. See ***SDG*** Table 3.11.1-3 for minimum wall thickness requirements.

E. For all land projects, voided substructure piers and columns located within the clear zone, regardless of the presence of guardrail or barriers, must be filled with concrete to 8 feet above the finished grade. For voided piers, the fill section may be accommodated with a secondary pour. Show mass concrete fill section to be cast against two layers of roofing paper.

F. For bridges designed for vessel collision, design pier columns to be solid concrete from 15 feet above MHW or NHW to 2 feet below Mean Low Water Level (MLW) or Normal Low Water Level (NLW). Voided sections that are filled after the column is constructed may be used.

*Commentary: The above requirement is sufficient for barge collision. Ship collision will be taken on a case-by-case basis. Coordinate with the State Structures Design Office.*

## 3.11.4 Cap Design (Rev. 01/17)

A. A minimum height of 4" is required for all pedestals not poured monolithically. For aesthetic purposes, pedestals generally should be no more than 12" tall for bents or piers supporting similarly-sized beams. If the pedestal exceeds 15" maximum height, step or slope cap to reduce pedestal height. Bents or piers with beams of different heights are exempt from the 15" maximum height. See also ***SDM*** Chapter 12.

B. For Inverted-T shaped pier caps, locate all longitudinal main reinforcing and post-tensioning tendons within the stem of the cross section. See Figure 3.11.4-1 Inverted-T Pier Cap Detail.

C. See ***SDG*** 4.1.4 for additional requirements.

### Figure 3.11.4-1 Inverted-T Pier Cap Detail

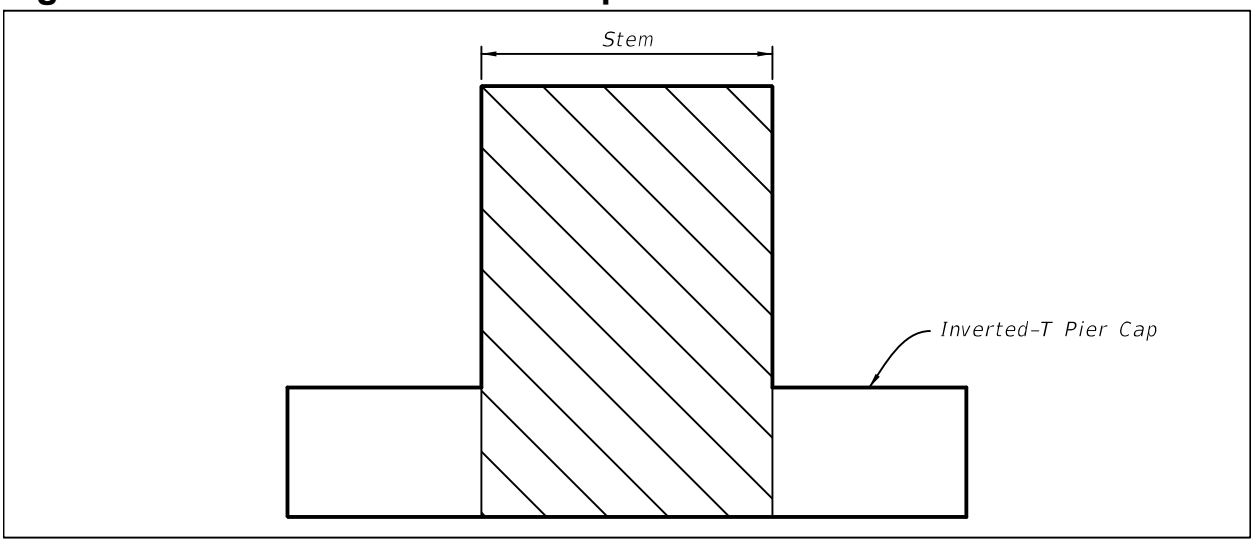

### 3.11.5 Rigidly Framed Concrete Straddle Piers

A. Account for the soil stiffness when analyzing the framed structure or provide a tension tie between the column footings.

B. Develop the longitudinal cap steel to the longitudinal column steel at the corners of the frame (column/cap interface).

*Commentary: A standard 90° hook at the end of longitudinal cap steel is not sufficient to carry the moment at the column/cap interface.*

C. For post-tensioned straddle piers, account for secondary moments, elastic shortening and time dependent effects in the analysis of the framed pier.

D. If a tension tie is used between columns or column footings, completely bury the tension tie and provide a minimum of three feet from the finish grade to the top of the tension tie.

## 3.12 RETAINING WALL TYPES (Rev. 01/17)

A. Using site-specific geotechnical information, the Structures EOR, in cooperation with the geotechnical engineer, will determine all wall system requirements. Consider site, economics, aesthetics, maintenance and constructability when determining the appropriate wall type.

B. Partial height walls such as perched and toe-walls are not desirable in some locations due to maintenance issues related to mowing access and maintaining adjacent fill slopes. Also, generally, full height walls better facilitate future widenings. See Figure 3.12-1.

| **Modification for Non-Conventional Projects:** |
|---|
| Delete ***SDG*** 3.12.B and see the RFP for requirements. |

**Figure 3.12-1 Partial Height MSE Retaining Wall Types**

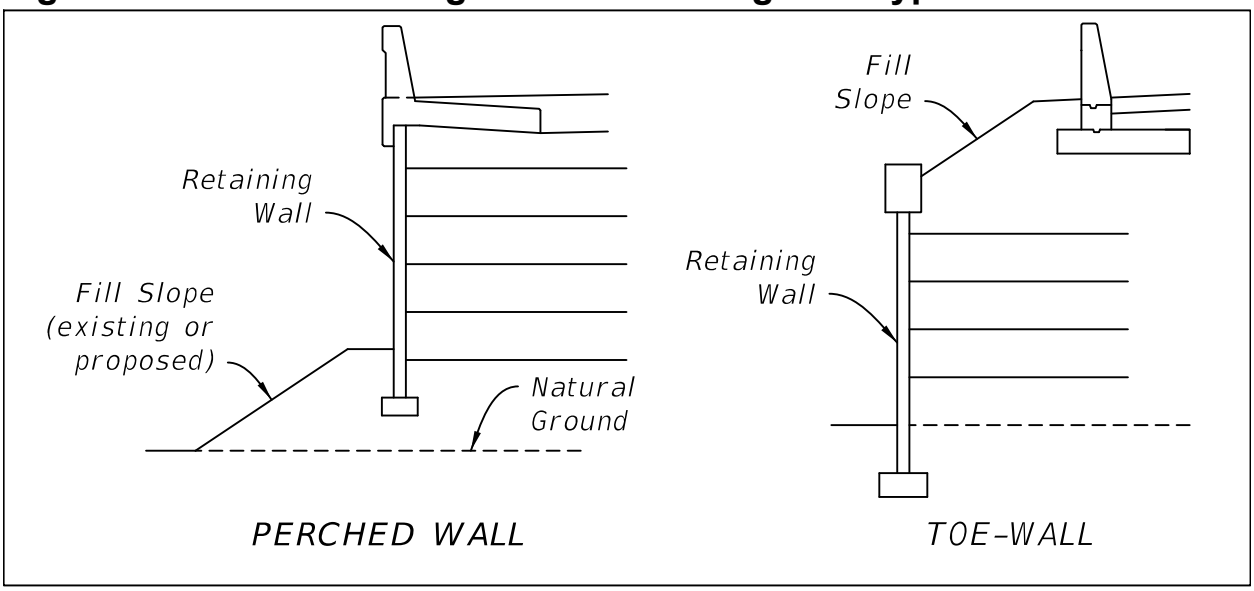

C. Use the following guidance for selecting permanent retaining wall types. See also the associated ***Instructions for Design Standards (IDS)*** and ***Design Standards*** where applicable.

Permanent Retaining Wall Selection Guidance:

1. Gravity Wall
   a. Settlement Limits:
      i. C.I.P. Concrete (***Design Standards*** Index 6011) — Total Settlement ≤ 2 inches; Differential Settlement ≤ 0.2%
      ii. Segmental Block Wall (SBW) (***Developmental Design Standards*** Index D6011) — See #2.a below
   b. Height Limit: — 5 feet
   c. Excavation Requirements: — See ***Design Standards*** Index 6011 and ***Developmental Design Standards*** Index D6011
   d. FDOT Wall Types — C.I.P. Concrete - FDOT Wall Type 1E; SBW - See #2 below
2. Segmental Block MSE Wall
   a. Settlement Limits: — Total Settlement ≤ 6 inches; Differential Settlement ≤ 0.5%
   b. Height Limit: — 40 feet
   c. Excavation Requirements: — 0.7H to H + (OSHA safe slope or braced excavation) ≥ 8ft
   d. Restrictions:
      i. Cannot support bridge on spread footing foundation
      ii. Batter of facing blocks must not impact clearance to curb, etc. generally 2° (1H:32V) batter
      iii. Supported traffic lanes must be 0.5H from back of wall facing
   e. Environmental Classification: — No formal classification
   f. FDOT Wall Types
      i. Wall outside of 100 year flood plain of water with chloride > 2000 ppm: — FDOT Wall Type 4A (SBW with any reinforcement)
      ii. Wall in 100 year flood plain of water with chloride > 2000 ppm: — FDOT Wall Type 4B (SBW with nonmetallic MSE reinforcement)

3. Reinforced Concrete Panel MSE Wall (***Design Standards*** Index 6020)
   a. Settlement Limits: Total Settlement ≤ 6 inches
      Differential Settlement (DS):
      Panels ≤ 5ft wide and ≤ 30ft$^2$ area - DS ≤ 1.0%
      Panels > 5ft wide or > 30ft$^2$ area - DS ≤ 0.5%
   b. Height Limit: 40 feet
   c. Excavation Requirements: 0.7H to H + (OSHA safe slope or braced excavation) ≥ 8ft
   d. Environmental Classification:

      Based on wall proximity to 100 year flood plain of water with chloride content > 2000 ppm, and Distance **D** to closest of SHWL shoreline to a body of water with chloride content above 2000 ppm or to a source releasing air contaminants (coal burning industrial facility, pulpwood plant, fertilizer plant or similar industry).
   e. FDOT Wall Types
      i. Wall in Seasonal High Water Level (SHWL) flood plain and **D** ≤ 50 feet: FDOT Wall Type 2F
      ii. Wall in 100 year flood plain of water with chloride > 2000 ppm and **D** ≤ 50 feet: FDOT Wall Type 2F
      iii. Wall in SHWL flood plain and **D** > 50 feet: FDOT Wall Type 2E
      iv. Wall in 100 year flood plain of water with chloride > 2000 ppm and **D** > 50 feet: FDOT Wall Type 2E
      v. **D** ≤ 50 feet*: FDOT Wall Type 2D
      vi. 50 feet < **D** ≤ 300 feet*: FDOT Wall Type 2C
      vii. 300 feet < **D** ≤ 2500 feet*: FDOT Wall Type 2B
      viii. **D** > 2500 feet*: FDOT Wall Type 2A

      * Wall not in 100 year flood plain of water with chloride content above 2000 ppm
4. Sheet Pile Wall
   a. Concrete - Use ***Design Standards*** Index 6040 for all Environments
      i. Install by jetting; use another option or preforming if embedment into rock or clay is required.

b. Steel and Other Materials - a project specific design is required

i. Steel - sacrificial thickness (see ***SDG*** Table 3.1-1) requirements may eliminate wall type.

ii. Polymer - cantilever height limit approximately 5 feet

5. Soldier Pile & Panel Wall

a. Concrete - a project specific design is required

b. Steel - a project specific design is required
- Sacrificial thickness (see ***SDG*** Table 3.1-1) requirements may eliminate wall type.

6. Cast-In-Place Concrete Cantilever Wall (***Design Standards*** Index 6010)

| | |
|---|---|
| a. Settlement Limits: (Settlement can be limited by deep foundations if needed) | Total Settlement ≤ 2 inches<br>Differential Settlement ≤ 0.2% |
| b. Height Limit: | None, however, practical limit is approximately 25 feet |
| c. Excavation Requirement: | 0.5H to 0.7H + OSHA safe slope or braced excavation |
| d. Environmental Classification: | Same as Bridge Substructure (see ***SDG*** 1.3.2) |
| e. FDOT Wall Types | |
| i. Extremely Aggressive within 50 feet of SHWL Shoreline of water with > 2000 ppm Chlorides: | FDOT Wall Type 1D |
| ii. Extremely Aggressive beyond 50 feet of SHWL Shoreline of water with > 2000 ppm Chlorides: | FDOT Wall Type 1C |
| iii. Moderately Aggressive: | FDOT Wall Type 1B |
| iv. Slightly Aggressive: | FDOT Wall Type 1A |

## 3.12.1 Mechanically Stabilized Earth (MSE) Walls (Rev. 01/17)

A. Metallic soil reinforcements are sensitive to the electrochemical properties of the back fill material and to the possibility of a change in the properties of the back fill materials due to submergence in water classified as Extremely Aggressive from heavy fertilization, salt contamination or partial contact with flowable fill.

*Commentary: Straps extending through dissimilar materials, such as flowable fill versus soil, can experience an electrochemical gradient which can lead to accelerated metal deterioration.*

B. Geosynthetic soil reinforcement may be required depending on environmental conditions of site. See ***PPM***, Volume 1, Chapter 30. Also site space limitations may preclude the use of MSE walls because of the inability to place the soil reinforcement.

C. MSE walls are generally the most economical of all wall types when the area of retaining wall is greater than 1000 square feet, and the wall is greater than 5 feet in height.

D. When total or differential settlements exceeding those in ***SDG*** 3.12.C.3 are anticipated, a two-phased MSE wall system is necessary.

E. Preapproved MSE wall systems utilizing reinforced concrete facing panels are listed on the ***Approved Products List***.

F. Segmental Block MSE walls (SBW) can be less expensive and more aesthetic than reinforced concrete panel MSE walls. SBWs are reinforced with non-metallic components, so they are permitted in all environments.

G. Temporary MSE walls are applicable in temporary fill situations. The soil reinforcement may be either steel or geogrid. Pre-approved temporary MSE wall systems are listed on the ***Approved Products List***.

H. Use of a mixture of metallic and non-metallic soil reinforcement within the height of a given wall, or in adjacent walls with overlapping reinforcement, is strictly prohibited.

### 3.12.2 Steel Sheet Pile Walls

A. Generally, steel sheet pile walls can be designed as cantilevered walls up to approximately 15 feet in height. Steel sheet pile walls over 15 feet are tied back with prestressed soil anchors or dead men.

B. Steel sheet pile walls are relatively expensive initially and require periodic maintenance (i.e. painting, cathodic protection).

C. In permanent sheet pile wall applications, concrete facing can be added to address maintenance and aesthetic concerns.

### 3.12.3 Concrete Sheet Piles

A. Concrete sheet piles are primarily used as bulkheads in either fresh or saltwater.

B. Rock, in close proximity to the ground surface, is a concern with this type of wall as they are normally installed by jetting.

C. Concrete sheet piles when used as bulkheads are normally anchored with dead men.

### 3.12.4 Soil Nails

A. A soil nail wall is similar to an MSE wall except the nails are installed into the soil volume without excavating the soil.

B. Soil nail walls may not be used to support bridges or other structures on shallow foundations.

### 3.12.5 Soldier Pile/Panel Walls

This type of wall is similar to sheet pile walls, however, the panels between the piles only extend to the bottom of the retained soil. The panels are supported by laterally loaded piles embedded into the foundation soil/rock. Soil anchors are sometimes used to limit the stress in the pile.

### 3.12.6 Modular Block Walls (Rev. 01/17)

Modular block walls consist of unreinforced blocks, which are sometimes used as a gravity wall and sometimes used as a wall facing for an MSE variation normally utilizing a geogrid for soil reinforcement.

### 3.12.7 Geosynthetic Reinforced Soil (GRS) Walls and Abutments

A. GRS abutments are a shallow foundation and retaining wall option that may reduce the construction time and cost of bridges.

B. GRS walls and abutments are constructed with coarse aggregate or Graded Aggregate Base (GAB) backfill and geosynthetic soil reinforcement.

C. GRS-Integrated Bridge System bridge abutments consist of the following:

1. 4000 psi 8-inch high masonry facing blocks or other approved facing material
2. Geosynthetic reinforcement with ultimate tensile strength ≥ 4,800 lb/ft.
3. Geosynthetic reinforcement spacings of less than 12 inches with smaller spacings in different portions of the GRS abutment.

D. Use of GRS walls and abutments on the Interstate or on other highways with abutments carrying 2 or more lanes in a single direction or 4 or more lanes in two directions requires the approval of the State Structures Design Engineer.

| **Modification for Non-Conventional Projects:** |
| --- |
| Delete ***SDG*** 3.12.7.D and insert the following:<br>D. GRS is not allowed for abutments on the Interstate or on other highways with abutments carrying 2 or more lanes in a single direction or 4 or more lanes in two directions, unless specifically stated in the RFP. |

E. GRS details are shown in the plans using ***Developmental Design Standard*** D6025.

# 3.13 RETAINING WALL DESIGN

## 3.13.1 General

A. See Chapter 30, ***PPM*** Volume 1 and ***SDM*** Chapter 19 for retaining wall plans preparation and administrative requirements in conjunction with the design requirements of this Section. Refer to ***SDG*** Chapter 1 for the retaining wall concrete class (excluding MSE Walls) and reinforcing steel cover requirements.

B. Rankine earth pressure may be used in lieu of Coulomb earth pressure.

C. During the design process, review wall locations for conflicts with existing or proposed structure foundations, drain pipes and drainage structures located beneath or adjacent to the proposed wall and/or reinforced soil zone. Analyze for constructability, settlement effects, wall stability, maintenance repair access, potential for removal or relocation of the structure foundation, drain pipe or drainage structure, etc. as appropriate.

D. Design all drainage conveyances and structures within or adjacent to retaining walls and embankments confined by retaining walls in accordance with the requirements of the ***Drainage Manual***.

E. Coordinate the design of drainage conveyances and structures within and adjacent to retaining walls with the Drainage EOR.

F. During the design process, review wall locations for conflicts with existing or proposed utilities beneath or adjacent to the proposed wall and/or reinforced soil volume. Coordinate wall and utility locations and designs with the District Utilities Engineer. The use of requirements established for drainage conveyances and structures as listed in the ***Drainage Manual*** is preferred. See the ***Utilities Accommodation Manual*** for more information.

## 3.13.2 Mechanically Stabilized Earth Walls [11.10] (Rev. 01/17)

*Commentary:* ***FHWA Publication No. FHWA-NHI-00-043, "Mechanically Stabilized Earth Walls and Reinforced Soil Slopes Design & Construction Guidelines"****, contains background information on the initial development of MSE wall design and is referenced by* ***LRFD*** *[11.10.1] as the design guidelines for geometrically complex MSE walls.*

A. For concrete class and cover requirements, refer to the Design Standard for the FDOT Wall Type as determined using ***SDG*** 3.12.C:

B. Minimum Service Life [11.5.1]

1. Design permanent walls for a service life of 75 years, except those supporting abutments on spread footings. Design walls supporting abutments on spread footings for a service life of 100 years.
2. Design temporary walls for the length of contract or a service life of three years, whichever is greater.

C. Leveling Pad

1. All permanent walls with panel facing will have a non-structural, unreinforced concrete leveling pad as a minimum. The entire bottom of the wall panel will have bearing on the concrete leveling pad.
2. All permanent walls with block facing will have a non-structural compacted aggregate or unreinforced concrete leveling pad.

D. Bin Walls [11.10.1]

1. When two walls intersect forming an internal angle of less than 70 degrees, design the nose section as a bin wall. Submit calculations for this special design with the plans for review and approval.
2. Design structural connections between wall facings within the nose section to create an at-rest bin effect without eliminating flexibility of the wall facings to allow tolerance for differential settlements.
3. For wall facings without continuous vertical open joints, such as square or rectangular panels, design the nose section to settle differentially from the remainder of the structure with a slip joint. Facing panel overlap, interlock or rigid connection across vertical joints is not permitted.
4. Design soil reinforcements to restrain the nose section by connecting directly to each of the facing elements in the nose section. Run soil reinforcement into the backfill of the main reinforced soil volume to a plane at least 3 feet beyond the Coulomb (or Rankine) failure surface. See Figure 3.13.2-1.
5. Design of facing connections, pullout and strength of reinforcing elements and obstructions must conform to the general requirements of the wall design.

## Figure 3.13.2-1 Design Criteria for Acute Corners of MSE Bin Walls

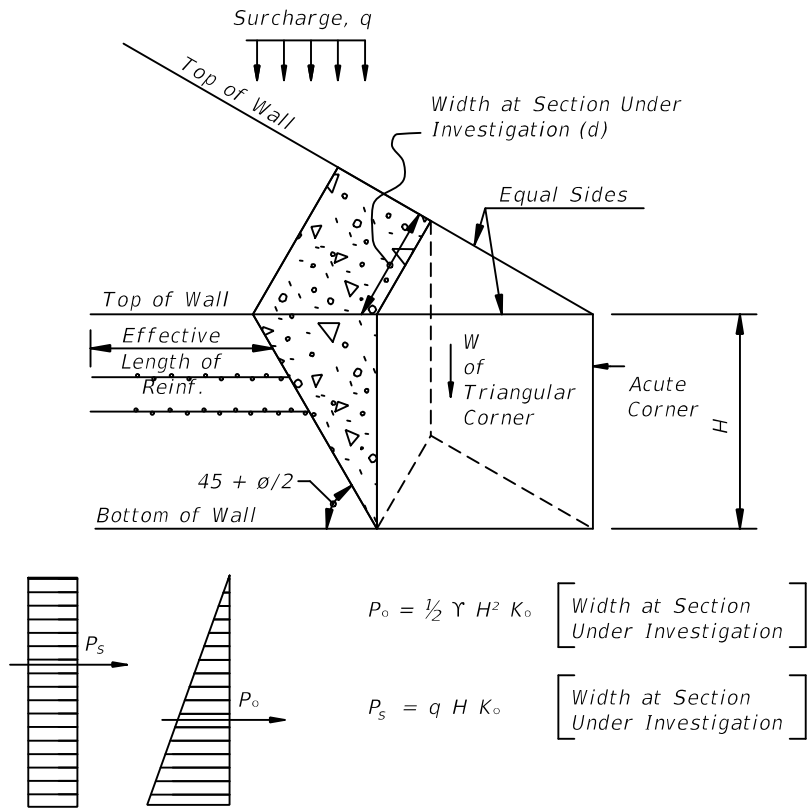


Note : Analyze the acute corner at each Column of Panel Joints until no reinforcement beyond the failure surface is required (i.e. until the factored sliding resistance is greater than the factored horizontal earth loads).

E. Minimum Length of Soil Reinforcement [11.10.2.1]

In lieu of the requirements for minimum soil reinforcement lengths in ***LRFD*** [C11.10.2.1] use the following:

The minimum soil reinforcement length, "**L**", measured from the back of the facing element, must be the maximum of the following:

Walls in Front of Abutments on Piling $\mathbf{L} \geq \mathbf{8}$ feet and $\mathbf{L} \geq \mathbf{0.7H}$.

Walls Supporting Abutments on Spread Footings $\mathbf{L} \geq \mathbf{0.6}(\mathbf{H} + \mathbf{d}) + \mathbf{6.5}$ feet (**d** = fill height above wall) and $\mathbf{L} \geq \mathbf{0.7H}$

Where: **H** = height of wall, in feet, and measured from the top of the leveling pad to the top of the wall coping. **L** = length in feet, required for external stability design.

*Commentary: As a rule of thumb, for a MSE wall with reinforcement lengths equal to 70% of the wall height, the anticipated factored bearing pressure ($q_{uniform}$) can be estimated to be about 200% of the overburden weight of soil and surcharge. It may be necessary to increase the reinforcement length for external stability to assure that the factored bearing pressure does not exceed the factored bearing resistance ($q_r$) of the foundation soil at this location.*

F. Minimum Front Face Wall Embedment [11.10.2.2]

1. Consider scour and bearing capacity when determining front face embedment depth.
2. Consider drainage and geotechnical issues in determining the elevation of the top of leveling pad.
3. In addition to the requirements for minimum front face embedment in ***LRFD*** [11.10.2.2], the minimum front face embedment for permanent walls must comply with both a minimum of 24-inches to the top of the leveling pad and Figure 3.13.2-2. Also, consider normal construction practices. See ***SDM*** Chapter 19 for additional details.

## Figure 3.13.2-2 MSE Wall Minimum Front Face Embedment

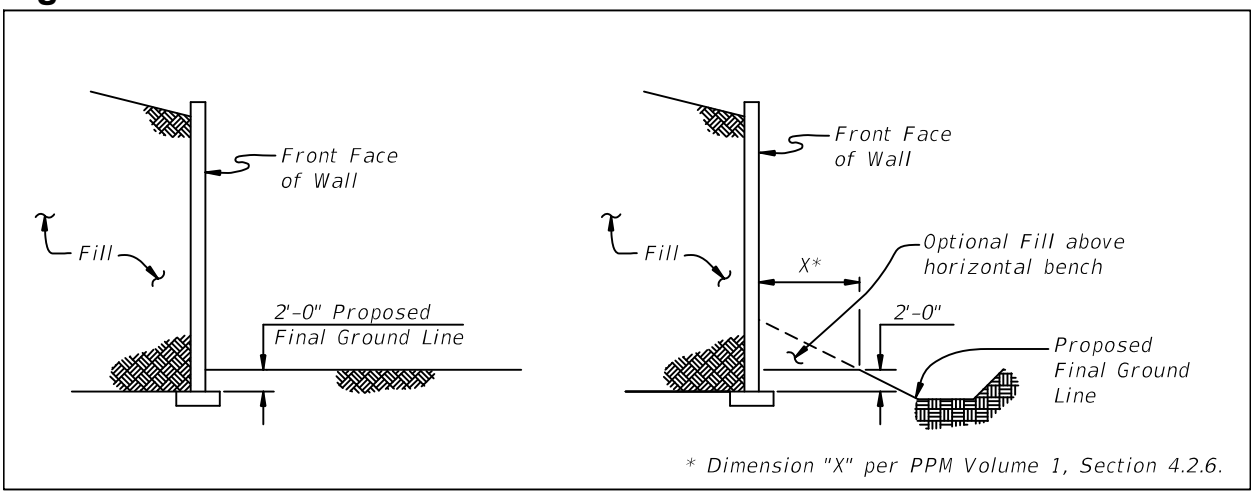


G. Facing [11.10.2.3]

1. The typical reinforced concrete square panel size is 5 feet by 5 feet (nominal) and shall not exceed 30 square feet in area.
2. The typical non-square (i.e., diamond shaped, not rectangular) panel size shall not exceed 40 square feet in area.
3. Special panels (top out, etc.) shall not exceed 50 square feet in area.
4. Full-height facing panels shall not exceed 5 feet in width.
5. The reinforcing steel concrete cover shall comply with the Design Standard for the FDOT Wall Type.
6. Segmental Block Wall facing blocks are typically 15 inches (or less) high.

H. External Stability [11.10.5] The reinforced backfill soil parameters for analysis are:

1. Sand Backfill (Statewide except Miami-Dade and Monroe Counties)
   a. Moist Unit Weight: 105 lbs per cubic foot
   b. Friction Angle: 30 degrees

2. Limerock Backfill (Miami-Dade and Monroe Counties only)
   a. Moist Unit Weight: 115 lbs per cubic foot
   b. Friction Angle: 34 degrees

**Modification for Non-Conventional Projects:**

Delete ***SDG*** 3.13.2.H.1 and 2 and insert the following:

H. External Stability [11.10.5]

1. When the reinforced backfill materials are not known, the reinforced backfill soil parameters for analysis are:
   a. Sand Backfill
      iii. Moist Unit Weight: 105 lbs per cubic foot
      iv. Friction Angle: 30 degrees
   b. Limerock Backfill
      i. Moist Unit Weight: 115 lbs per cubic foot
      ii. Friction Angle: 34 degrees
2. When the reinforced backfill materials are known, the reinforced backfill soil parameters for analysis are:
   a. Sand Backfill
      i. Unit Weight: minimum density for acceptance
      ii. Friction Angle: value determined by lab testing, not to exceed 36 degrees
   b. Limerock Backfill
      i. Unit Weight: 95% of AASHTO T-180 maximum density
      ii. Friction Angle: value determined by lab testing, not to exceed 42 degrees

3. Flowable Fill Backfill
   a. Total Unit Weight: 45 to 125 lbs per cubic foot
   b. f'c: minimum 75 psi
4. In addition to the horizontal back slope with traffic surcharge figure in ***LRFD***, [Figure 3.13.2-3] illustrates a broken back slope condition with a traffic surcharge. If a traffic surcharge is present and located within 0.5H of the back of the reinforced soil volume, then it must be included in the analysis. Figure 3.13.2-4 illustrates a broken back slope condition without a traffic surcharge.

## Figure 3.13.2-3 Broken Backfill with Traffic Surcharge

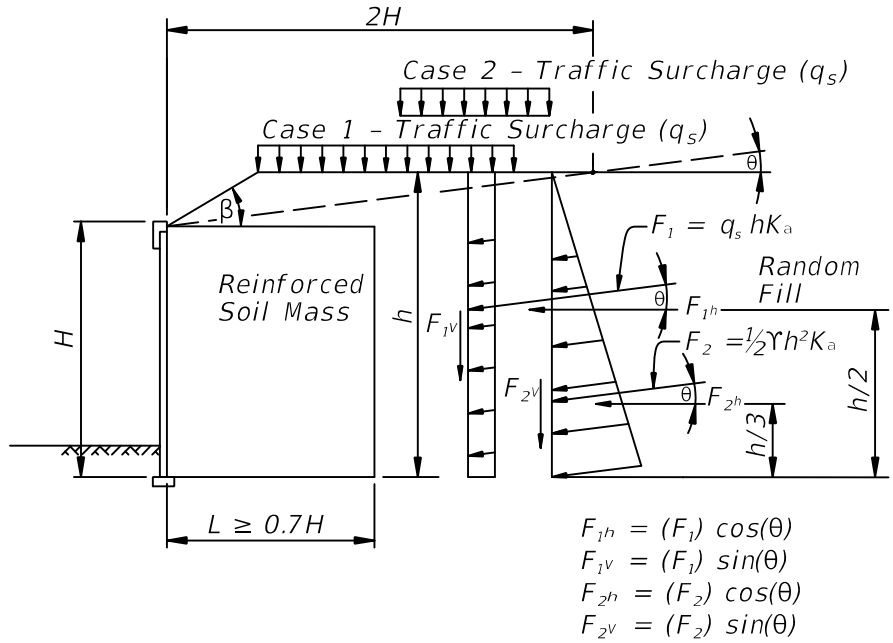


Case 1 – used for bearing resistance, reinforcement tensile resistance and overall stability calculations.

Case 2 – used for sliding, eccentricity, and reinforcement pullout resistance calculations.

$K_a$ For Random Fill : $K_a = \cos(\theta) \left[ \frac{\cos(\theta) - \sqrt{\cos^2(\theta) - \cos^2\varnothing}}{\cos(\theta) + \sqrt{\cos^2(\theta) - \cos^2\varnothing}} \right]$

$\varnothing$ = friction angle of back fill or foundation, whichever is lowest.

Loads shown are unfactored. Use appropriate load and resistance factors in analysis. (See SDG 3.13.2.H.6 for a link to the LRFD External Stability Analysis for MSE Walls program).

## Figure 3.13.2-4 Broken Backfill without Traffic Surcharge

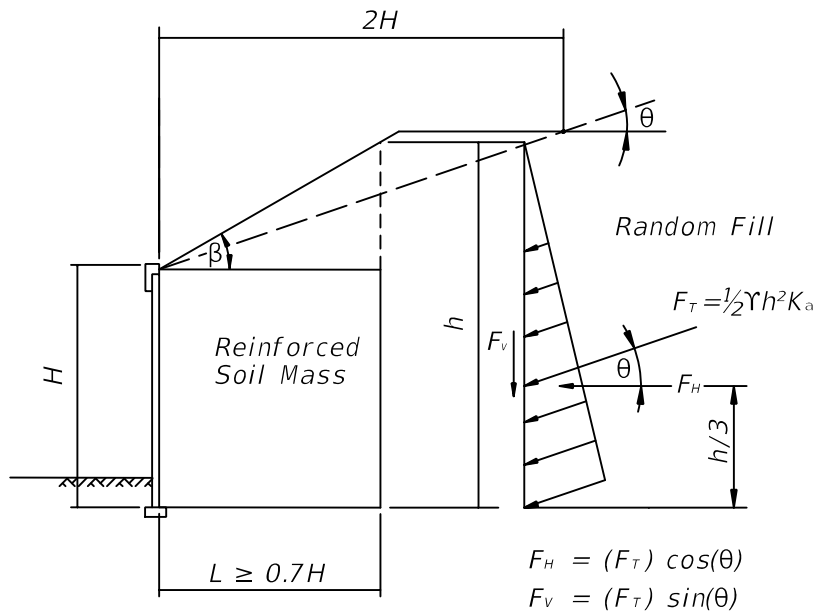


$F_H = (F_T)\cos(\theta)$

$F_V = (F_T)\sin(\theta)$

For Infinite Slope $\theta = \beta$

$K_a$ For Random Fill : $K_a = \cos(\theta)\left[\frac{\cos(\theta) - \sqrt{\cos^2(\theta) - \cos^2\varnothing}}{\cos(\theta) + \sqrt{\cos^2(\theta) - \cos^2\varnothing}}\right]$

$\varnothing$ = friction angle of back fill or foundation, whichever is lowest.

*Loads shown are unfactored. Use appropriate load and resistance factors in analysis. (See SDG 3.13.2.H.6 for a link to the LRFD External Stability Analysis for MSE Walls program).*

5. The Geotechnical Engineer of Record for the project is responsible for designing the reinforcement lengths for the external conditions shown in Figure 3.13.2-5 and any other conditions that are appropriate for the site.

## Figure 3.13.2-5 Proprietary Retaining Walls

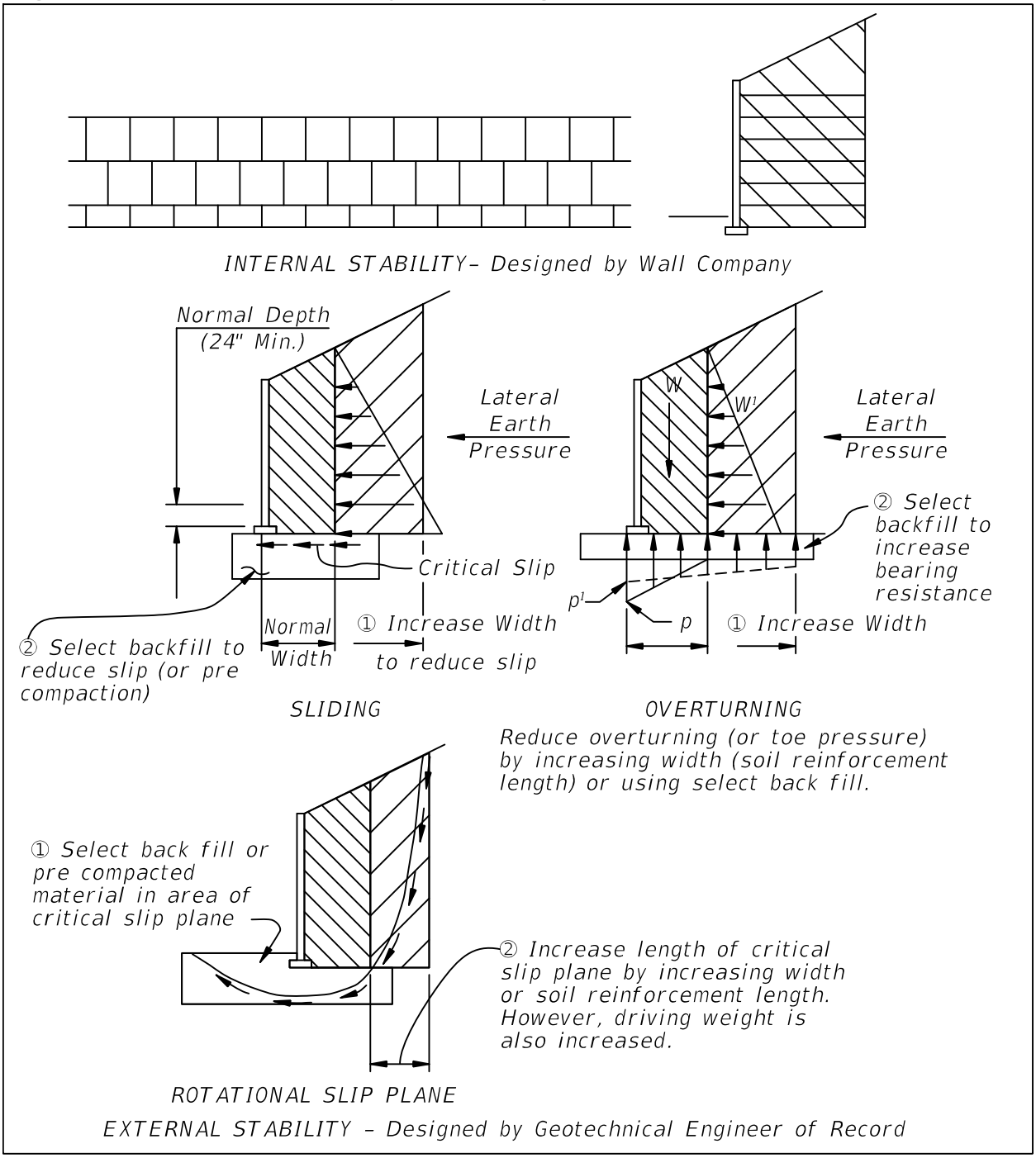


6. Click for the ***LRFD External Stability Analysis for MSE Walls***.

I. Apparent Coefficient of Friction [11.10.6.3.2] The pullout friction factor (F*) and the resistance factor for pullout (Ø) need not be modified for the design of soil reinforcement below the design flood elevation when the angle of internal friction is determined for saturated conditions.

J. Soil Reinforcement Strength [11.10.6.4]

1. In lieu of the corrosion rates specified in ***LRFD*** [11.10.6.4.2a], substitute the following requirements: The following corrosion rates for metallic reinforcement apply to permanent MSE Walls within non-corrosive environments only (low and moderate air contaminants where distance (D) from the wall to an Environmental Source of Interest is greater than 300 ft. See ***SDG*** 3.12.C for more information.):
   a. Zinc (first 2 years) 0.58 mils/year
   b. Zinc (subsequent years to depletion) 0.16 mils/year
   c. Carbon Steel (after depletion of zinc to 75 years) 0.47 mils/year
   d. Carbon Steel (75 to 100 years) 0.28 mils/year
2. Use a minimum corrosion rate of 6 mils/year for Temporary MSE Walls with:
   a. non-stainless metallic reinforcement below the 100 year flood elevation with chloride content above 2,000 ppm.
   b. structural connections (two Phase walls) exposed to extreme air contaminants (where distance (D) from the wall to an Environmental Source of Interest is less than or equal to 300 ft. See ***SDG*** 3.12.C for more information).
3. Do not use metallic soil reinforcement if the wall is located within the 100 year flood plain and either of the following apply:
   a. the nearby water chloride content is greater than 2,000 ppm, or
   b. the groundwater or surface water pH is less than 4.5.
4. Epoxy coated reinforcement mentioned in ***LRFD*** [C11.10.6.4.2a] is not permitted. Passive metal soil reinforcement (i.e., stainless steel, aluminum alloys, etc.), is permitted only with written SDO approval.
5. For geosynthetic reinforcements use R-3 geosynthetics meeting the requirements of ***Specifications*** Section 985. Limit $T_{max}$ and $T_o$ (***LRFD*** [11.10.6.4.1]) to $T_{2\%}$ for permanent walls and $T_{5\%}$ for temporary walls.
6. For geosynthetic reinforcement, supplement ***LRFD*** [Table 11.10.6.4.3b-1] with the following default value:

| Application | Total Reduction Factor, RF |
|---|---|
| Critical temporary wall applications with non-aggressive soils and polymers meeting the requirements listed in Table 11.10.6.4.2b-1. | 7.0 |

7. For permanent wall systems using welded wire soil reinforcement, the minimum wire size in both the longitudinal and transverse directions shall be W10 for walls with a 75-year service life and W11 for walls with a 100-year service life.

8. Do not design soil reinforcement to be skewed more than 15 degrees from a position normal to the wall panel unless necessary and clearly detailed for acute corners. In these instances, follow the pre-approved bin wall details shown in the ***APL*** Vendor Drawings.

*Commentary: There are times when the 15 degree criteria cannot be met due to vertical obstructions such as piling, drainage structures or bridge obstructions with angles. In these cases, clearly detail the soil reinforcement skew details in the Shop Drawings.*

9. Do not design soil reinforcement to be skewed more than 15 degrees from a horizontal position in elevation view to clear horizontal obstructions.
10. Soil reinforcement must not be attached to piling, and abutment piles must not be attached to any retaining wall system.

K. Reinforcement/Facing Connection [11.10.6.4.4] Design the soil reinforcement to facing panel connection to assure full contact of the connection elements. The connection must be able to be inspected visibly during construction.

*Commentary: Normally mesh and bar mats are connected to the facing panel by a pin passing through loops at the end of the reinforcement and loops inserted into the panels. If these loops are not aligned, then some reinforcement will not be in contact with the pins causing the remaining reinforcement to be unevenly stressed and/or over stressed. If the quality of this connection cannot be assured through pullout testing and quality control during installation, then the strength of the soil reinforcement and its connections shall be reduced accordingly.*

L. Flowable Fill Backfill

1. Flowable fill backfill will prevent the MSE wall from adapting to differential settlements as well as sand or limerock backfilled MSE walls, however, the use of flowable fill may speed wall construction. Flowable fill backfill is permitted only with written SDO approval.

| **Modification for Non-Conventional Projects:** |
|---|
| Delete ***SDG*** 3.13.2.L.1 |

2. Prior to requesting approval, verify external stability, the accommodation of anticipated settlements and the cost effectiveness of flowable fill backfill.

| **Modification for Non-Conventional Projects:** |
|---|
| Delete ***SDG*** 3.13.2.L.2 |

3. Provide 1'-0" flowable fill cover in all directions between metallic soil reinforcement and adjacent sand or limerock backfill. Provide 3 feet of sand or limerock backfill between the top of the flowable fill and the bottom of the roadway base.
4. Indicate the minimum and maximum flowable fill unit weights which will satisfy all external stability requirements with a range of at least 10 pcf.
5. Provide for drainage of water between the flowable fill and the MSE wall panels.

M. End Bents on Piling or Drilled Shafts behind MSE Walls

1. Locate MSE Walls adjacent to end bents so as to avoid any conflicts with the end bent foundation elements. See ***SDM*** 19.1 and ***SDM*** 19.6.
2. The minimum clear distance shall be 24-inches for the following:
   a. Between the front face of the end bent cap or footing and the back of wall facing.
   b. For battered piles, at the base of the wall between the face of piling and the leveling pad. Note: The 24-inch dimension is based on the use of 18-inch piles. For larger piles and drilled shafts, increase the clear distance between the wall and pile or drilled shaft such that no soil reinforcement is skewed more than 15 degrees.
3. Provide soil reinforcement to resist lateral forces and/or overturning moments if analysis shows it is necessary. Soil reinforcement may be attached to end bents unless the total settlement of the soil above the bottom of the end bent cap exceeds 2-inches. In this case, the soil reinforcement must not be attached to the end bent and a special wall behind the backwall must be designed to resist the earth load. A wall similar to an FDOT Type 3 wall (but without wire facing or baskets) that is designed and constructed using the criteria for permanent walls may be used for this purpose. See also ***SDM*** 12.3.

N. Spread Footing Abutments on MSE Walls:

1. Size the spread footing so that the bearing pressure due to service loading does not exceed 4,000 psf.
2. Locate the edge of the spread footing a minimum of 1 foot behind the back of the wall panel.
3. Size and locate the spread footing so that the distance between the centerline of bearing of the footing and the back of the wall panel is a minimum of 4 feet.
4. Include the vertical and horizontal design loads per square foot and show limits of loading in the plans such that the MSE wall system can be designed by the proprietary wall vendor. Provide both service and factored loads.
5. Except as permitted below, spread footing abutments behind MSE walls are only allowed for single span structures or for multi-simple-span structures where the deck is made discontinuous over the first interior support. Spread Footing Abutments on MSE Walls may be permitted for continuous superstructures, but only when the superstructure has been designed for the worst-case boundary conditions utilizing the following design assumptions:
   a. Zero settlement of the interior supports.
   b. Initial settlement of the spread footing due to weight of bridge superstructure and approach slab.
   c. Long term settlement of spread footing up to day 10,000.

6. Include details, e.g. troughs, gutters and/or pipes, that will capture all water from a potentially failed bridge deck expansion joint and convey it to a Stormwater Management Facility.
7. Use the same soil reinforcing length, strength and placement frequency away from the spread footing as is required to support the spread footing.

*Commentary: Use of the same soil reinforcing across the length of the wall allows for the bridge to be widened in the future using the same spread footing foundation system.*

8. Use steel reinforcement only.
9. Segmental Block MSE Walls may not be used to support spread footing abutments.

O. Back-To-Back MSE Walls:

Design Back-to-back MSE walls for the two cases shown as follows:

## Figure 3.13.2-6 Back-to-Back MSE Walls

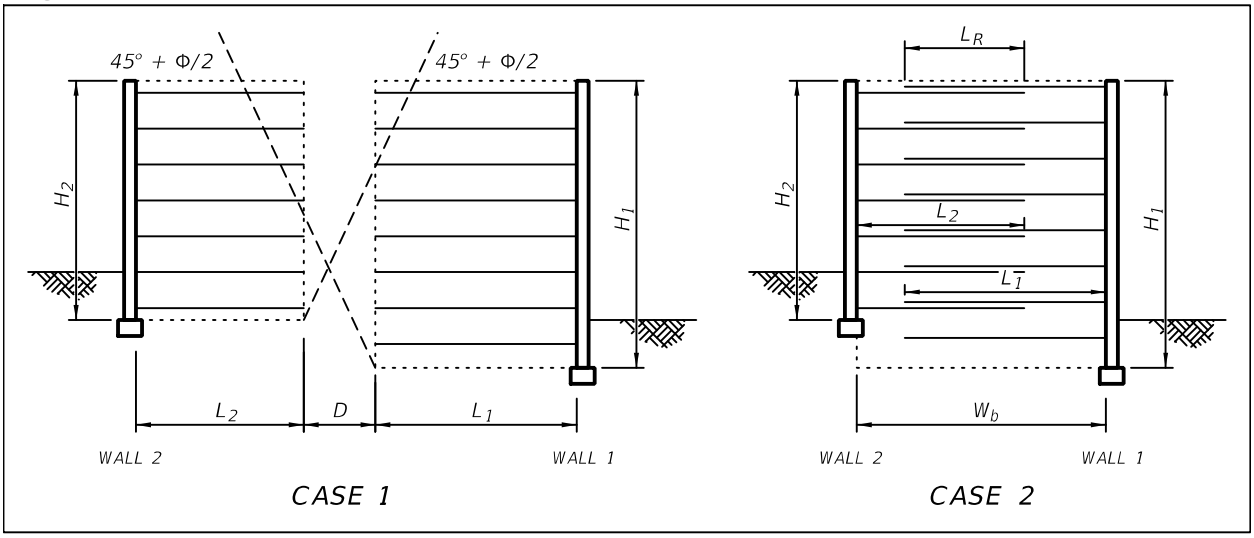


**Case 1**

For Case 1 as shown in Figure 3.13.2-6, the overall base width is large enough so that each wall behaves and can be designed independently. In particular, there is no overlapping of the reinforcements. Theoretically, if the distance, D, between the two walls is shorter than $D = H_1 \tan(45° - \Phi°/2)$ where $H_1$ is the height of Wall 1, the taller of the parallel walls, then the active wedges at the back of each wall cannot fully spread out and the active thrust is reduced. When $0.50H_2 < D < 0.50H_1$ assume the full active thrust is mobilized against Wall 2, however, a reduced active thrust may be considered against Wall 1. For values of $D > 0.50H_1$ assume the full active thrust is mobilized against Wall 1.

**Case 2**

For Case 2 as shown in Figure 3.13.2-6, there is an overlapping of the reinforcements such that the two walls interact. When the overlap, $L_R$, is greater than $0.3H_2$, where

$H_2$ is the height of Wall 2, the shorter of the parallel walls, no active earth thrust from the backfill needs to be considered on Wall 2 for external stability calculations. For the instances when $0.3H_2 < L_R < 0.3H_1$ the horizontal earth pressure diagram acting on Wall 1 is shown schematically in Figure 3.13.2-7.

For intermediate geometries between $D = 0.50H_1$ (in Case 1) and $L_R > 0.30H_2$ (in Case 2), the active earth thrust may be linearly interpolated from the full active case to zero.

## Figure 3.13.2-7 Horizontal Earth Pressure on Taller Back-to-Back MSE Wall

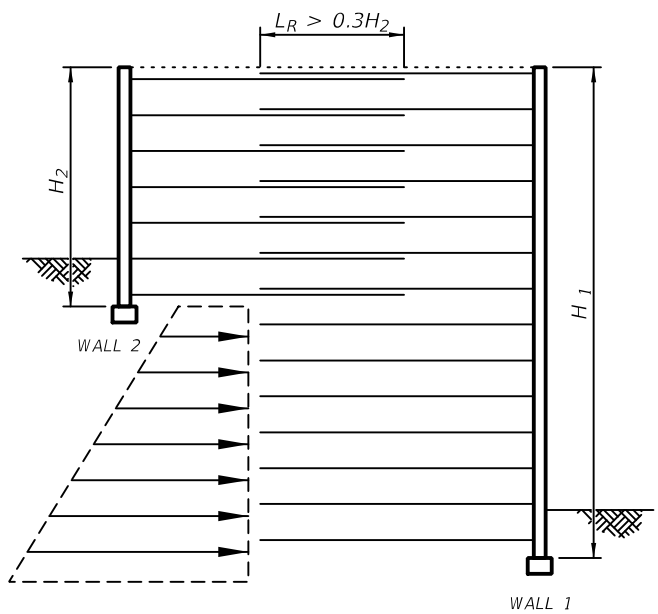


For Case 2 geometries where the horizontal earth pressure acting on Wall 2 is assumed to be zero for external stability:

1. Overlaps ($L_R$) shall be greater than $0.3H_2$,
2. $L_1/H_1 \geq 0.6$ where $L_1$ and $H_1$ are the length of the reinforcement and height, respectively, of the taller wall,
3. $L_2/H_2 \geq 0.6$ where $L_2$ and $H_2$ are the length of the reinforcement and height, respectively, of the shorter wall.

For all Case 2 geometries:

1. $W_b \geq 0.7H_2$ where $W_b$ is the base width as shown in Figure 3.13.2-6 and $H_2$ is the height of the shorter wall. In stacked back to back wall geometries such as shown in Figure 3.13.2-8, ensure the base $W_b \geq 0.7H_1$ and $W_c \geq 0.7H_3$.
2. Do not use single layers of reinforcements connected to both wall facings.

## Figure 3.13.2-8 Horizontal Earth Pressure on Stacked Back-to-Back MSE Walls

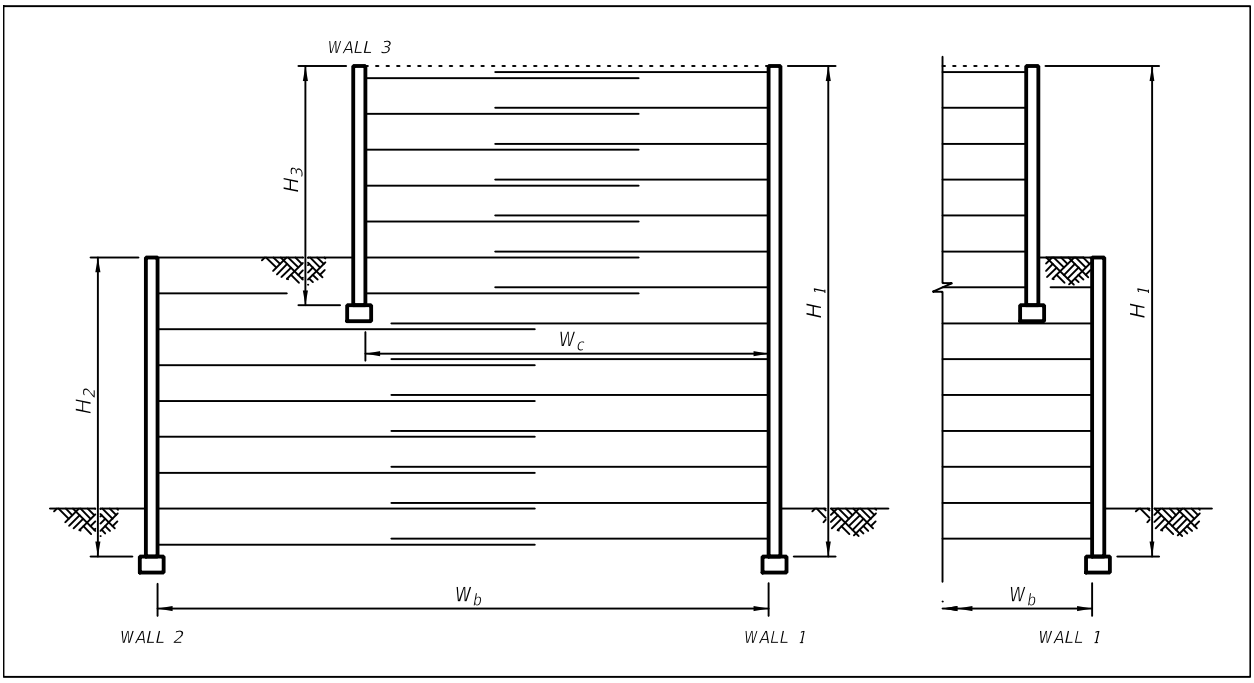


P. Whenever practical, provide a design geometry that will allow the contractor to provide a Segmental Block MSE wall in lieu of an MSE wall with reinforced concrete panels:

1. Ensure the battering of the wall face from the top to the toe will not impact maintenance berms, features in front of the wall or required offset distances.
2. Provide a minimum horizontal distance between the edge of the travel lane and the wall equal to one-half of the wall height. (The shoulder, guardrail and guardrail offsets may be within this distance.)
3. Indicate on the wall control drawings which MSE walls may be Segmental Block MSE walls.
4. Include the ***Developmental Specification*** 548 in the Specifications Package.

### 3.13.3 Permanent and Critical Temporary Sheet Pile Walls

A. Determine the required depth of sheet pile embedment (**D**) using the procedure outlined in ***LRFD*** [11.8.4] and described in detail in ***LRFD*** [C11.8.4.1] with load factors of 1.0 and the appropriate resistance factor from ***LRFD*** [11.6.2.3].

B. Determine the required sheet pile section in accordance with ***LRFD*** [11.8.5], using the normal load and resistance factors for each load case.

C. When the supported paved roadway will not be paved or resurfaced after the wall deflects, the design horizontal deflection shall not exceed 1-1/2 inches.

D. When the supported paved roadway will be paved or resurfaced after the wall deflects, or the supported roadway is unpaved, the design horizontal deflection shall not exceed 3 inches.

E. When the wall maintains the structural integrity of a utility, the design horizontal deflection shall be established on a case-by-case basis in cooperation with the utility owner.

*Commentary - The above deflection limits for Cases C and D are intended to maintain confinement of the subsoils supporting the roadway. The increased limit in Case D above assumes the lost confinement will be restored by the compaction effort exerted during resurfacing. The deflection limit for Case E will vary by the sensitivity of the utility and its location in the supported embankment.*

F. For permanent concrete sheet pile walls, comply with the tensile stress limits in ***LRFD*** [5.9.4.2.2] and apply the "severe corrosive conditions" to walls with an Extremely Aggressive environment classification.

## 3.13.4 GRS Walls and Abutments

*Commentary: FHWA Publication No.* ***FHWA-HRT-11-026 "Geosynthetic Reinforced Soil Integrated Bridge System Interim Implementation Guide"*** *(GRS Guide) outlines recommended practice for the design and construction of GRS-IBS. FHWA Publication* ***FHWA-HRT-11-027 "Geosynthetic Reinforced Soil Integrated Bridge System Synthesis Report"*** *provides background information and fundamental characteristics of GRS-IBS.*

A. Design GRS abutments in accordance with the ***LRFD*** methodology contained in Appendix C of the ***FHWA-HRT-11-026 "Geosynthetic Reinforced Soil Integrated Bridge System Interim Implementation Guide***, except as otherwise described in this section.

B. GRS abutments may be used to support single span bridges not exceeding 140 feet and which are not at risk of movement due to transverse loading, uplift, etc. GRS Abutments may also be considered for multi-span bridges with simply supported end spans.

C. Coordinate with the Drainage/Hydraulics Engineer to determine the design scour depth at the abutment with respect to the distance between abutments.

D. Detail the top of the Reinforced Soil Foundation (RSF) at the scour elevation for the 100 year storm event, the design storm or 6 inches below the finished ground surface, whichever is deeper.

E. Ensure the minimum length of the bottom layer of GRS backfill reinforcement "B" is not less than 8 feet.

F. The bottom beam seat reinforcement layer length is 4 ft. to 6 ft. long with a conventional 4 ft. long tail. Subsequent beam seat reinforcement layer lengths are L with a conventional 4 ft. tail.

G. Ensure the thickness of the RSF is 24 inches or 0.25B, whichever is greater.

H. Extend the RSF a distance of at least 24 inches or 0.25B, whichever is greater, in front of the wall facing.

I. Do not exceed the maximum vertical spacing of Geosynthetic Reinforcement as described for each on the following zones:
   1. RSF = 12 inches
   2. GRS Backfill = height of one course of facing block or 8", whichever is less
   3. Bearing Bed = 4 inches
   4. Beam Seat = 4 inches
   5. GRS-GAB Transition = 6 inches
   6. Integrated Approach = 6 inches

J. Use actual dimensions of facing blocks and soil reinforcement thicknesses when designing, detailing and specifying elevations in the GRS-IBS.

K. GRS Walls are designed as GRS Abutments but without the "Bearing Bed Zone" or "Beam Seat Zone" shown in the ***Developmental Design Standard*** D6025.

L. Ensure the Abutment Width and Wingwall Lengths accommodate a whole number of facing blocks. Half width blocks may be used at the end of the wingwalls in order to accommodate the interlacing of blocks at the corner with the abutment walls

M. Based on testing by the State Materials Office, assume the following GRS backfill design values of:
   1. Graded Aggregate (GAB) $\gamma_{NAT}$ = 140 pcf, $\varphi_f$ = 42 deg, C = 0
   2. Coarse aggregate (#57 or #67 stone) $\gamma_{NAT}$ = 105 pcf, $\varphi_f$ = 42 deg, C = 0

N. For the RSF, use a woven geotextile listed in Section 985 of the ***Specifications*** and approved for use in GRS (Type R-1) with a minimum ultimate tensile strength of 4800 lb/ft in both the machine and cross directions and a maximum Apparent Opening Size (AOS) of 0.035 in.

O. For GRS backfill reinforcement, use a biaxial geogrid or woven geotextile reinforcement consisting of structural geosynthetic listed in Section 985 of the ***Specifications*** and approved for use in GRS (Type R-1) with a minimum ultimate tensile strength of 4800 lb/ft in both the machine and cross directions.

P. Ensure the width of GRS Abutments exceeds 0.8 times the sum of the GRS height and the superstructure depth.

## 3.14 FENDER SYSTEMS

### 3.14.1 General

A. Bridge fender systems serve primarily as navigation aids to vessel traffic by delineating the navigation channel beneath bridges. Fender systems must be robust enough to survive a multitude of impacts and scrapes from barge traffic, while being sufficiently flexible to absorb kinetic energy when redirecting an errant barge or other vessel. It is expected that this type of design will minimize the potential for damage to vessels and fenders during a minor collision while being able to redirect some vessel impacts that would otherwise destroy a more rigid style fender system.

B. The Department determines when fender systems or other protective features are required and requests U.S. Coast Guard (USCG) concurrence with plan details and locations. Coordination with the Army Corps of Engineers and local government agencies is also encouraged as they may have plans that could affect the channel alignment/depth and/or type/volume of vessel traffic. A fender system will be required for the majority of bridges over navigable waterways in Florida under the jurisdiction of the USCG. In some cases, circumstances such as deep water, poor soil conditions and /or heavy vessel traffic will lead to long span designs of bridges. If the bridge span is approximately 2.5 times the required navigation channel width and the navigation channel is centered on the span, omit a fender system unless required by the USCG. Each bridge site is unique and the USCG will evaluate the Department's plans based on local characteristics such as accident history, water velocities and cross currents, geometry of the channel, etc.

| **Modification for Non-Conventional Projects:** |
|---|
| Delete ***SDG*** 3.14.1.B and insert the following:<br>B. Provide fender system per the RFP or as required by the U.S. Coast Guard permit, whichever is more stringent. |

C. Dolphins and islands can be used to protect existing bridge substructures that were not designed to resist vessel collision loads and in some cases are used to protect the substructures of bridges located at port facilities. The use of dolphins and islands is discouraged as they also represent a hazard to vessels, aggravate scour and increase water flow velocities. The use of dolphins and islands will require customized designs and usually will include extensive hydraulic and geotechnical evaluations.

## 3.14.2 EOR's Design Procedure (Rev. 01/17)

A. Determine if steel hulled barge traffic is present using the Past Point map link below: http://www.fdot.gov/structures/pastpointmaps/vppm.shtm
   1. If there is no Past Point at the fender location, steel-hulled commercial barge traffic is not present; therefore, unless otherwise directed by the District, specify the use of ***Design Standards*** Index 21930 in the plans and no further design is required. See the ***Instructions for Design Standards (IDS)***. Index 21930 for more information and plan content requirements.
   2. If there is a Past Point at the fender location, steel-hulled commercial barge traffic is present; therefore, proceed with the following steps.

B. Establish fender locations to provide the required horizontal navigational clearance. Where feasible provide an offset of 10 feet between the back of the fender system and the near face of the adjacent pier, footing or bent. Do not connect fender systems to piers, footings or bents unless it is geometrically impossible to do otherwise. Establish fender flare locations at the same points directly opposite each other measured perpendicular to the centerline of the navigation channel. The minimum distance from the superstructure coping to the beginning of the fender flare is 10 feet. See ***SDM*** Chapter 24 for additional information and plan content requirements.

C. Using Table 3.14.2-1 and the Past Point number of the fender system location obtained from the appropriate Past Point map, determine the Minimum Energy Absorption Capacity (EAC).

## Table 3.14.2-1 Table of Past Points and associated Minimum Energies

| Past Point | Minimum Energy (k-ft) | Past Point | Minimum Energy (k-ft) | Past Point | Minimum Energy (k-ft) | Past Point | Minimum Energy (k-ft) |
|---|---|---|---|---|---|---|---|
| 1 | 466 | 14 | 201 | 27 | 455 | 40 | 273 |
| 2 | 437 | 15 | 445 | 28 | 199 | 41 | 248 |
| 3 | 205 | 16 | 557 | 29 | 199 | 42 | 179 |
| 4 | 233 | 17 | 571 | 30 | 233 | 43 | 179 |
| 5 | 213 | 18 | 434 | 31 | 423 | 44 | 190 |
| 6 | 218 | 19 | 2426 | 32 | 206 | 45 | 190 |
| 7 | 218 | 20 | 244 | 33 | 218 | 46 | 199 |
| 8 | 492 | 21 | 237 | 34 | 188 | 47 | 261 |
| 9 | 179 | 22 | 179 | 35 | 218 | 48 | 261 |
| 10 | 54 | 23 | 412 | 36 | 221 | 49 | 206 |
| 11 | 54 | 24 | 199 | 37 | 273 | 50 | 209 |
| 12 | 54 | 25 | 458 | 38 | 1387 | 51 | 208 |
| 13 | 254 | 26 | 479 | 39 | 2426 | 52 | 208 |

*Commentary: The "Minimum Energy" for each Past Point shown in Table 3.14.2-1 has been determined by following the procedure as outlined in the commentary of the AASHTO "Guide Specification and Commentary for Vessel Collision Design of Highway Bridges", Second Edition, 2009, Section C3.8. Assumptions made in determining the "Minimum Energy" are as follows:*

$\mu = 0.15$

$\alpha = 15$ *degrees*

$V = 6.4$ *fps*

*W = as determined by the maximum barge weight plus the tug weight specific to each Past Point (If needed, contact the SDO for more information).*

D. In coordination with the District, determine the following:

1. The Required EAC, which is defined as the Minimum EAC previously obtained from Table 3.14.2-1 plus any Additional EAC at the discretion of the District.

*Commentary: The Minimum EAC is based on the fender system location and the 90th percentile of barge traffic at that location. When determining the need for Additional EAC requirements, consider site conditions, past accident history, maintenance records, volume and size of vessel traffic and bridge main span length relative to channel width. Contact the SDO for assistance in determining the magnitude of Additional EAC and/or if the 100th percentile of barge traffic is desired.*

2. The Maximum Allowable Fender System Deflection acceptable for the project.

*Commentary: Contact of the fender system with the adjacent pier, footing or bent due to vessel impact with the fender system is undesirable and should be avoided where possible. Were contact to occur, the potentials for snagging and/or pocketing of the vessel along the fender are increased and additional significant damage to the fender and possibly the adjacent pier, footing or bent can be expected.*

3. Restrictions on fender system materials. The use of Fiber Reinforced Polymer (FRP) Composites for all members (wales, piles, spacer blocks, catwalk and handrail components) is preferred; however, project specific conditions may warrant the use of alternate materials for the piling. If an alternate piling material use is required, the SDO must review and approve the material use before any design is implemented. Do not specify the use of timber wales.

4. Access ladder, catwalk and handrail requirements. If catwalks are used, a minimum catwalk width of 2'-4" is recommended.

| **Modification for Non-Conventional Projects:** |
|---|
| Delete ***SDG*** 3.14.2.D and see the RFP. |

E. Investigate and resolve conflicts between the proposed fender system and existing utilities or structures. Show adjacent existing utilities and structures in the plans.

F. Design Navigation Lighting and Clearance Gauge Details as follows:

1. Design navigation lighting, lateral lighting, daymarks and vertical clearance gauges for bridges over navigable waterways per ***Title 33 Code of Federal Regulations (CFR) Part 118***, the ***USCG Bridge Lighting and Other Signals Manual*** and as directed by the District. Design these same items for bridges over other waterways as directed by the District.

| **Modification for Non-Conventional Projects:** |
|---|
| Delete ***SDG*** 3.14.2.F.1 and see the RFP. |

2. See ***Design Standards*** Index 21220 Navigation Light System Details (Fixed Bridges) and the associated ***Instructions for Design Standards (IDS)*** for additional navigation and clearance gauge light requirements and details.

3. Design clearance gauges to extend from 1'-0" below Mean Low Water to the top of the fender system. Provide Plan details for the clearance gauges in accordance with ***SDM*** Chapter 24.

G. Design Access Ladders, Platforms and Catwalks as follows:

1. Contact the District Structures Maintenance Engineer (DSME) for access ladder, platform and catwalk requirements.

*Commentary: Generally, where maintenance access to fender mounted navigation lighting is not provided or made possible by boat, provide ladders and platforms from the bridge to the fender catwalk.*

2. Design ladders and platforms per OSHA and ***Title 29 Code of Federal Regulations (CFR), Part 1910, Section 27***. The clearance between rungs and obstructions should be 12-inches but not less than 7-inches. Specify hot dip galvanized steel or other accepted materials for ladders and platforms as directed by the District.

3. Specify FRP lumber decking or FRP open grating for catwalks as directed by the District using the example General Notes as shown in ***SDM*** Chapter 24.

| **Modification for Non-Conventional Projects:** |
| --- |
| Delete ***SDG*** 3.14.2.G and see the RFP. |

H. Develop plans for the fender system and other associated components as described above. Include the following sheets in the Plans:

General Note Sheet

Schematic Plan Sheet

Schematic Partial Plan Sheet (if used)

Fender System Details Sheet

Clearance Gauge Detail Sheet

Report of Core Borings Sheets (if used or include a cross reference to the Report of Core Borings Sheets for the bridge)

I. See ***SDM*** Chapter 24 for examples of applicable information and plan content requirements. In addition, list any restrictions on fender system materials and project specific information needed to complete the design as determined above.

*Commentary: The Contractor's EOR will develop a fender system design meeting the requirements of the Plans and Specifications. The fender system design is submitted by the Contractor to the SDO for review approval using the shop drawing process. This will allow the SDO to ensure uniformity in design methodologies and act as a means for Quality Assurance.*

## 3.14.3 Contractor's Design Procedure (Rev. 01/17)

A. Develop designs and details for fender systems that result in flexible, energy absorbing structures. Design fender systems to limit deflection due to vessel impact so as to avoid contact of the fender system with adjacent piers, footings or bents. Do not connect fender systems to piers, footings or bents unless shown in, or otherwise permitted by, the plans. If a fender system is to be connected to an adjacent pier, footing or bent, or if additional stiffness of a fender system is needed locally to limit its deflection adjacent to a pier, footing or bent, design the fender system to be incrementally stiffer along its length approaching the pier, footing or bent. Such an

incremental increase in stiffness will reduce the potential for pocketing or snagging of an impacting vessel along the length of the fender system approaching the pier, footing or bent and will reduce the potential for associated damage to, and maintenance of, the fender system. Avoid abrupt changes in the stiffness of the fender system along its length.

*Commentary: Flexibility of the fender system is necessary in order for it to maintain its ability to absorb kinetic energy and smoothly redirect errant vessels.*

B. Use the following criteria in conjunction with the schematic fender system geometry and other requirements shown in the Plans:

- Fender System height above MHW or NHW shall be the lesser of 8'-0" or 70% of the vertical clearance at MHW or NHW.
- The maximum distance between the bottom of the lowermost wale and MLW or NLW shall be 1'-0".
- Provide a pile cluster with a minimum of three piles at each end of the fender.
- Provide a pile cluster with a minimum of two piles at each wale splice location. Provide a minimum clear space of 2'-6" between piles or pile clusters.
- Provide wales with a maximum height of 1'-0".
- Provide an 8" minimum to 1'-0" maximum (nominal) open space between wales.
- Provide spacer blocks between wales at all pile locations.
- Provide a 2" offset between the front face of wales and the front face of spacer blocks.
- Recess all hardware a minimum of ½" from the front face of wales.
- The use of a curved configuration for the flared section of the fender system that is comparable to the chorded configuration shown is permitted.

C. Design Criteria for Structural Members:

1. For FRP composite structural members, see the ***Structures Manual***, ***Volume 4***, Fiber Reinforced Polymer Guidelines for design criteria and additional guidance. For FRP composite members without nationally recognized design specifications that provide criteria to account for material degradation and ductility, use appropriate environmental reduction factors required to account for degradation of the materials over their design service life. In addition, for members having a non-ductile failure mode, reduce the flexural resistance as determined in accordance with ***Specifications*** Section 471 by 20%. A non-ductile member is one that has a ductility factor less than 1.25. The ductility factor is defined as the ratio of the ultimate displacement to the yield displacement.
2. Design non-FRP structural members and all other components in accordance with the Contract Documents.

D. Design Methodology:

1. Use the project specific design information and limitations shown in the plans.
2. Use a computer program that allows modeling of cantilevered piles embedded in soil representing the project's in-situ soil profile. The program must also incorporate soil strengths using P-Y curves and allow modeling of pile-to-wale interaction.

*Commentary: The use of FB-MultiPier is preferred. When using other software packages to model the fender system, select the comparable settings as appropriate for that software so as to emulate the settings described herein for an FB-MultiPier analysis.*

3. Include capacities of, and interaction between, the wales and piles in the analysis.
4. In FB-MultiPier, model the soil profile using the Report of Core Borings sheets included in the Plans and remove all soils above the ½ of 100-year Scour Elevation.

*Commentary: The ½ of 100-yr Scour Elevation = Existing ground elevation - (0.5 x predicted 100 year scour).*

5. In FB-MultiPier, select "Full Section Properties" for the Section Type and "Non-Linear" for the behavior of the main structural members.

*Commentary: The analysis is a two step process:*
*4) Run linear analysis to convergence to meet the energy requirement.*
*5) Run non-linear analysis to determine maximum displacement and maximum wale and pile forces.*

6. Determine the minimum pile tip elevation ($E_{min}$) as follows. In FB-MultiPier, model a single cantilever pile. Load the top of the pile with a transverse load that generates the ultimate moment resistance of the pile. Determine the unstable embedment depth (Eo) by raising the pile tip elevation until pile deflections become unreasonable or the program does not converge. Determine $E_{min}$ as the lowest of the following elevations:
   a. $E_{min}$ = ½ of 100-year Scour Elevation - $E_o$ - 6 feet
   b. $E_{min}$ = ½ of 100-year Scour Elevation - 1.2($E_o$ + 1 foot)
   c. $E_{min}$ = ½ of 100-year Scour Elevation - 10 feet
7. Design the fender system members as follows. Create an FB-MultiPier model of the fender system using the geometry shown in the plans. For simplicity, the fender system may be modeled as a straight fender system with no angle breaks between sections and a straight length equal to the length of the entire system along the straight and curved portions. Use pile embedments no less than $E_{min}$ as determined above. Consider both wale and pile moment capacities to determine magnitude(s) and location(s) of the critical load(s). Create multiple load cases applying incrementally increasing lateral static load(s) located between and directly at the piles or pile clusters. Apply these concentrated load(s) for each load case within the middle unit (typically, the middle 8 feet) of the fender model. These loads may be equally distributed between the two uppermost wales.

*Commentary: During the design process, meet the fender system deflection limitations listed in the plans. Increasing the pile tip embedment beyond $E_{min}$ may be beneficial.*

*Due to the current modeling limitations of FB-MultiPier for "extra members", the following loading configuration on the two uppermost wales is suggested for analysis while considering the load case resulting in the maximum wale design forces:*

1. *On the top wale, place one load at midspan between piles. (Use this member to determine maximum design forces in the wales)*
2. *On the lower wale, split the remaining load into two equal vectors and apply one each directly to the piles on the right and left of the span.*

8. Determine the fender system EAC as follows. Develop a force versus displacement diagram from the analysis, then compute the EAC based on the area under the curve. A conservative approximation by using the triangular area under the curve is acceptable. This area represents the fender system's capacity to develop the required EAC to redirect or possibly bring an errant vessel to rest. Report the minimum calculated EAC from the multiple load cases as the "EAC" in the shop drawings. This EAC must be greater than or equal to the Required EAC shown in the plans.
9. Determine the maximum fender system deflection. Report this as the fender system deflection in the shop drawings. This deflection must be less than or equal to the Maximum Allowable Fender System Deflection shown in the plans.
10. Design pile-to-wale connections and wale splices to resist member forces and reactions as determined by the analysis described above.
11. Detail the terminus of the fender system with a three-pile cluster (using the same pile section as detailed along the length of the fender system) or an alternate section having section proprieties greater than or equal to that of a composite three-pile cluster.

*Commentary: This terminal three-pile cluster need not be designed to meet the Required EAC from a direct barge hit. No separate design or analysis is required for these members.*

12. Perform a constructability review including manufacturing, transportation and installation.
13. Perform a Pile Installation Constructability Review by the Geotechnical Engineer to verify that the pile tips shown in the plans can be reasonably obtained and the use of any proposed penetration aids (jetting, preforming, etc.) will not jeopardize adjacent structures.

# 3.15 CONCRETE BOX AND THREE-SIDED CULVERT DESIGN

## 3.15.1 General

Use ***PPM*** Volume 1, Chapter 33 for culvert plans preparation in conjunction with the design requirements of this Section. Refer to ***SDG*** Chapter 1 for the box culvert concrete class (***SDG*** Table 1.4.3-1) and reinforcing steel (***SDG*** Table 1.4.2-1) cover requirements.

## 3.15.2 Design Method

Design new reinforced concrete culverts and extensions to existing culverts (precast or cast-in-place, four-sided or three-sided) subjected to either earth fill and/or highway vehicle loading in accordance with ***LRFD***.

Investigate the need for culvert barrel weep holes to relieve uplift pressure. When culvert barrel weep holes are determined to be necessary, show the requirement in the plans. Typical weep hole size, location, and filter materials used to intercept the flow and prevent formation of piping channels is found in ***Specifications*** Sections 400 and 410.

## 3.15.3 Load Modifiers and Load Factors [3.4.1] [12.5.4]

A. The product of the load modifiers and maximum load factors $[(\eta) \times (\gamma)]$ for Strength Limit States shall be equal to:

   1. Box Culverts (four-sided)

      1.05 x 1.30 = 1.365 for Vertical Earth Pressure (EV)
      1.05 x 1.35 = 1.418 for Horizontal Earth Pressures (EH)

   2. Three-Sided Culverts

      1.05 x 1.35 = 1.418 for Horizontal and Vertical Earth Pressure (EV and EH)

B. Use 1.00 as the load modifiers $(\eta)$ for horizontal loads when investigating the minimum horizontal earth pressure effects in accordance with ***LRFD*** [3.11.7], and combined with the maximum load factors for Strength Limit State investigation.

C. Use 1.00 as the load modifier $(\eta)$ for all other Limit States and Load Types including construction load investigation.

## 3.15.4 Dead Loads and Earth Pressure [3.5] [3.11.5] [3.11.7]

A. The dead load on the top slab consists of the pavement, soil, and the concrete slab. For simplicity in design, the pavement may be assumed to be soil.

B. Use the following design criteria in determining dead load and earth pressures:

   Soil = 120 pcf
   Concrete = 150 pcf
   Horizontal earth pressure (At-Rest) for:

      Maximum load effects = 60 pcf (assumes soil internal friction angle = 30°)
      Minimum load effects = 30 pcf (50% of maximum load effects)

C. Modify vertical earth pressures in accordance with ***LRFD*** [12.11.2.2.1], Modification of Earth Loads for Soil Structure Interaction (Embankment Installations) for both box and three-sided culverts.

## 3.15.5 Live Load

Design reinforced concrete culverts for HL-93. Lane loading is required for the design of culverts with spans greater than 15 feet in lieu of the exemption in ***LRFD*** [3.6.1.3.3].

*Commentary: Concurrent lane loading is necessary for **LRFD** designs because the SU4 Florida Legal Load produces greater flexural moments than HL-93 without lane loading for spans exceeding 18 feet.*

## 3.15.6 Wall Thickness Requirements (Rev. 01/17)

A. Determine the exterior wall thickness for concrete culverts based on the design requirements, except that the following minimum thickness requirements have been established to allow for a better distribution of negative moments and corner reinforcement in rectangular structures:

| CLEAR SPAN | MINIMUM EXTERIOR WALL THICKNESS |
|---|---|
| < 8 ft. | 7-inch (Precast); 8-inch. (C.I.P.) |
| 8 ft. to < 14 ft. | 8-inch |
| 14 ft. to < 20 ft. | 10-inch |
| 20 ft. and greater | 12- inch |

B. The interior wall thickness in multi-cell culverts must not be less than 7-inches for precast culverts and 8-inches for cast-in-place culverts.

C. Increase the minimum wall thickness by one inch for concrete culverts in extremely aggressive environments (3-inch concrete cover).

## 3.15.7 Concrete Strength and Class

Design reinforced concrete culverts for the following concrete strengths in accordance with the ***SDG*** Chapter 1:

Precast:

$\mathbf{f'_c}$ = 5,000 psi (Class II modified, or Class III) in Slightly Aggressive Environments

$\mathbf{f'_c}$ = 5,500 psi (Class IV) in Moderately and Extremely Aggressive Environments

Cast-in-place:

$\mathbf{f'_c}$ = 3,400 psi (Class II) in Slightly Aggressive Environments

$\mathbf{f'_c}$ = 5,500 psi (Class IV) in Moderately and Extremely Aggressive Environments

## 3.15.8 Reinforcement

A. Reinforcement may be deformed bars, smooth welded wire reinforcement, or deformed welded wire reinforcement. Use a yield strength of 60 ksi for deformed bar reinforcement and 65 ksi for welded wire reinforcement.

B. For the maximum service load stress in the design of reinforcement for crack control, comply with ***LRFD*** [12.11.3] using the following exposure factors for ***LRFD*** [5.7.3.4]:

   $\gamma_e$ = 1.00 (Class 1) for inside face reinforcement in slightly to moderately aggressive environments, and extremely aggressive environments where a minimum 3 inches of concrete cover is provided;

   $\gamma_e$ = 0.75 (Class 2) for outside face reinforcement in all environments.

C. Investigation of fatigue in accordance with ***LRFD*** [5.5.3.2] is not required for reinforced concrete box culverts.

*Commentary: AASHTO voted to exclude box culverts from fatigue design at the May 2008 meeting.*

D. Provide minimum reinforcement in accordance with ***LRFD*** [5.7.3.3.2] for cast-in-place culverts and simple span top slabs of precast culverts, and ***LRFD*** [12.11.4.3.2 and 12.14.5.8] for precast culverts, with the following exceptions for precast culverts with earth fill cover equal to or greater than 2 feet:

   1. Where reinforcement is distributed on both inside and outside faces, the ratio of minimum reinforcement area to gross concrete area at each face may be reduced to 0.001, but not less than the area of reinforcement required to satisfy 1.33 times the factored flexural moment for reinforcement ratios less than 0.002.
   2. Walls or slabs with a thickness equal to or less than 13 inches may contain only a single layer of reinforcement, located at the tension face when the opposite face is permanently in compression and in contact with the soil.

E. Provide distribution reinforcement as described in ***LRFD*** [9.7.3.2], transverse to the main flexural reinforcement in the bottom of the top slab of reinforced concrete box culverts for earth fill cover heights less than two feet as follows:

   1. For skews ≤ 60°, provide the amount of distribution reinforcement required in ***LRFD*** [9.7.3.2] first equation.
   2. For skews > 60°, provide the amount of distribution reinforcement required in ***LRFD*** [9.7.3.2] second equation.

F. Do not use shear reinforcement in concrete culverts. Design slab and wall thickness concrete shear capacity in accordance with ***LRFD*** [5.8] and [5.14.5.3].

## 3.15.9 Reinforcement Details

A. Design the main reinforcement in the top and bottom slabs perpendicular to the sidewalls in cast-in-place culverts and non-skewed units of precast culverts. For reinforcement requirements of skewed precast culverts, see ***SDG*** 3.15.10.

B. The minimum inside bend diameter for negative moment reinforcement (outside corners of top and bottom slabs) must satisfy the requirements of ***LRFD*** [5.10.2.3] and be not less than 4.0 db for welded wire reinforcement.

C. Top and bottom slab transverse reinforcement must be full-length bars, unless spliced to top and bottom corner reinforcement.

## 3.15.10 Skewed Culverts

A. Design and detail skewed precast concrete culverts with non-skewed interior units designed for the clear span perpendicular to the sidewalls and skewed end units designed for the skewed clear span.

B. For a cast-in-place concrete box culvert with a skewed end, the top and bottom slab reinforcement will be "cut" to length to fit the skewed ends. The "cut" transverse bars have the support of only one culvert sidewall and must be supported at the other end by edge beams (headwall or cutoff wall). See ***Design Standards*** Index 289 for layout details.

*Commentary: Precast concrete culverts with skewed ends usually cannot use edge beams as stiffening members because of forming restrictions. The transverse reinforcement must be splayed to fit the geometry of the skew. This splaying of the reinforcement will increase the length of the transverse bars and, more importantly, the design span of the end unit. For small skews, the splayed reinforcement is usually more than adequate. However, large skews will require more reinforcement and may require an increased slab thickness or integral headwalls.*

## 3.15.11 Deflection Limitations [2.5.2.6.2]

Ensure that top slab deflection due to the live load plus impact does not exceed 1/800 of the design span. For culverts located in urban areas used in part by pedestrians, this deflection must not exceed 1/1000 of the design span. Determine deflections in accordance with ***LRFD*** [2.5.2.6.2]. Gross section properties may be utilized.

## 3.15.12 Analysis and Foundation Boundary Conditions

A. Analyze culverts using elastic methods and model the cross section as a plane frame (2D) using gross section properties.

B. For box culverts restrain the bottom slab by any of the following methods:

1. Fully pinned support at one corner and pin-roller support at the opposite corner;
2. Vertical springs (linear-elastic or non-linear soil springs) at a minimum of tenth points and a horizontal restraint at one corner;
3. Beam on elastic foundation and a horizontal restraint at one corner.
   Obtain the modulus of subgrade reaction from the Geotechnical Engineer when performing the more refined analyses in 2. and 3.

C. Three-sided culverts on spread footings shall be designed at critical sections for the governing case of either, a fully pinned support condition and a pin-roller support condition. A refined analysis of the pin-roller support condition is permitted if soil springs (linear-elastic or non-linear) are substituted for the horizontal supports allowing for one inch movement at the maximum horizontal reaction for the governing factored load case.

*Commentary: Designers of three-sided culverts typically compute moments, shears, and thrusts based on fully pinned support conditions that are able to resist horizontal forces and prevent horizontal displacements. These boundary conditions may not be appropriate for most foundations in Florida. Fully pinned support conditions could be used if site and construction conditions are able to prevent any horizontal displacement of frame leg supports. Such a condition may exist if footings are on rock or pile supported, and frame legs are keyed into footings with adequate details and construction methods.*

### 3.15.13 Span-to-Rise Ratios

Span-to-rise ratios that exceed 4-to-1 are not recommended. As span-to-rise ratios approach 4-to-1, frame moment distribution is more sensitive to support conditions, and positive moments at midspan can significantly exceed computed values even with relatively small horizontal displacement of frame leg supports. If it is necessary to use a three-sided frame with a span-to-rise ratio in excess of 4-to-1, the structure must be analyzed for midspan positive moment using pin-roller support conditions.

### 3.15.14 Load Rating Requirements

A. Load rate bridge-size culverts (see definition in ***PPM*** Volume 1, Chapter 33,) in accordance with ***SDG*** Chapter 1. Calculations must be signed and sealed by a professional engineer currently approved to perform Minor Bridge Design under Rule 14-75 of the Florida Administrative Code.

B. Cast-in-place culverts load ratings must be performed by the licensed professional engineer designer. Show the load rating summary in the Contract Plans. Precast culverts must be load rated by the Contractor's Engineer of Record (see definition in the ***Specifications*** Section 1-3) and the load rating shown on the approved shop drawings, unless otherwise provided on the ***Design Standards***, Index 292.

## 3.16 NOISE WALL DESIGN

### 3.16.1 Scope [15.1]

Add the following to ***LRFD*** [15.1]:

Use the general requirements of ***PPM*** Volume 1, Chapter 32 in conjunction with the structural design requirements of ***LRFD*** as modified by the FDOT ***Structures Design Guidelines***.

## 3.16.2 General Features - Panel Height [15.4] and Post Spacing

Nominal post spacing shall be a minimum of 10 feet and a maximum of 20 feet. Actual post spacing at corner posts may vary slightly to optimize the use of standard panel lengths.

Add the following section to ***LRFD*** [15.4]:

Total wall heights range from a minimum of 12 ft to a maximum of 22 ft. The height of individual precast panels must be a minimum of 6 ft, except for the following: the panel height may be a minimum of 4 ft when required due to low clearance conditions or when graphics must be accommodated in walls with total heights between 12 ft. and 14 ft. Where fire hose access holes are required, the bottom panel must be at least 6 feet high to allow forming of the access hole. Where an access door is required, the bottom panel must be a minimum of 8 feet high to allow forming and installation of a 6'-0" high door.

## 3.16.3 General Features - Concrete Strength and Class [15.4]

Add the following section to ***LRFD*** [15.4]:

All concrete noise wall components shall be Class IV as defined in ***Specifications*** Section 346. The concrete cover on all reinforced and prestressed concrete designs shall be per ***SDG*** Table 1.4.2-1.

## 3.16.4 Wind Loads [3.8.1][15.8.2] (Rev. 01/17)

See ***SDG*** 2.4.1 for wind loads on ground mounted noise walls.

## 3.16.5 Vehicular Collision Forces [15.8.4]

In ***LRFD*** [15.8.4], replace paragraphs 4 through 9 with the following:

On flush shoulder roadways, locate noise walls outside the clear zone unless shielded, and as close as practical to the right-of-way line. On urban curbed roadways, the front face of the noise wall posts shall be a minimum of 4 feet behind the face of the curb. Additional setbacks may be required to meet minimum sidewalk requirements. Noise walls may be combined with traffic railings on a common foundation if the combination meets the crash test requirements of ***NCHRP 350*** or the ***Manual for Assessing Safety Hardware (MASH)*** Test Level 4 criteria.

Noise walls should not be located on bridge structures where feasible alternative locations exist. Noise walls on bridge structures cause a disproportionate increase in bridge cost because of strengthening of the deck overhang and exterior girder. In addition, noise walls on bridges interfere with normal maintenance inspection access and detract from the aesthetic quality of the structure. See ***Design Standards***, Index 5210 and 5212 for acceptable crash tested 8 ft. bridge and retaining wall mounted noise walls.

Traffic railing mounted noise walls and combination traffic railing / noise walls must meet the requirements of ***PPM*** Volume 1, Chapter 4. The criteria specified in ***LRFD*** [15.8.4] may be used to design test specimens for crash testing.

### 3.16.6 Foundation Design [15.9]

Add the following to ***LRFD*** [15.9.1]:

Use the FDOT ***Soils and Foundations Handbook***, Appendix B for design of auger cast piles.

### 3.16.7 Lateral Earth Pressures [3.11.5.10]

In the first and second sentence of ***LRFD*** [3.11.5.10], change "may be used" to "shall be used".

## 3.17 CONCRETE DRAINAGE STRUCTURES

### 3.17.1 General

Use ***PPM*** Volume 2, Chapter 14 for drainage structure plans preparation in conjunction with the design requirements of this Section for special designs not included in the ***Design Standards***. Refer to ***SDG*** Chapter 1 for the box culvert concrete class (***SDG*** Table 1.4.3-1) and reinforcing steel (***SDG*** Table 1.4.2-1) cover requirements for non-standard drainage structures.

### 3.17.2 Design Method

Design new reinforced concrete drainage structures subjected to either earth fill and/or highway vehicle loading in accordance ***LRFD***.

### 3.17.3 Load Modifiers and Load Factors [3.4.1] [12.5.4]

A. The product of the load modifiers and maximum load factors [ ($\eta$) x ($\gamma$) ] for Strength Limit States shall be equal to:

   1. Box Culverts (four-sided)
      1.05 x 1.30 = 1.365 for Horizontal Earth Pressures (EH)
      1.05 x 1.35 = 1.418 for Vertical Earth Pressure (EV)
   2. Three-Sided Culverts
      1.05 x 1.35 = 1.418 for Horizontal and Vertical Earth Pressure (EV and EH)

B. Use 1.00 as the load modifier ($\eta$) for horizontal loads when investigating the minimum horizontal earth pressure effects in accordance with ***LRFD*** [3.11.7], and combined with the maximum load factors for Strength Limit State investigation.

C. Use 1.00 as the load modifier ($\eta$) for all other Limit States and Load Types including construction load investigation.

## 3.17.4 Dead Loads and Earth Pressure [3.5] [3.11.5] [3.11.7]

A. The dead load on the top slab consists of the pavement, soil, slab self weight, and riser section with grates or covers if applicable. For simplicity in design, the pavement may be assumed to be soil.

B. The following criteria shall be used in determining dead load and earth pressures for design:

   Soil = 120 pcf

   Concrete = 150 pcf

   Horizontal earth pressure (At-Rest) for:

   Maximum load effects = 60 pcf (assumes soil internal friction angle = 30°)

   Minimum load effects = 30 pcf (50% of maximum load effects)

C. Do not modify vertical earth pressures in accordance with ***LRFD*** [12.11.2.2.1], Modification of Earth Loads for Soil Structure Interaction (Embankment and Trench Conditions).

D. Use abutment conditions for determining live load surcharge earth pressures for all structures within the clear zone.

## 3.17.5 Live Load

Design drainage structures within the clear zone for HL-93, except that structures located behind curb or paved shoulders need only meet the Strength Limit State for load combinations with HL-93. Lane loading is required for design of structures with spans greater than 15 feet in lieu of the exemption in ***LRFD*** [3.6.1.3.3].

*Commentary: Concurrent lane loading is necessary for **LRFD** designs because the SU4 Florida Legal Load produces greater flexural moments then HL-93 without lane loading for spans exceeding 18 feet.*

## 3.17.6 Hydrostatic Loading

Unless more refined hydraulic data is available, design drainage structures located in predominantly granular soils, for a maximum differential hydrostatic head of ten feet when determining the external soil pressures. For structures located in cohesive soils consider fully saturated soils for the full height of the structure.

*Commentary: Most soils in Florida can be considered cohesionless, especially for embankment construction where the deepest drainage structures are usually located. Due to the high permeability of these soils, any condition resulting in a differential water elevation exceeding 10 feet is considered very temporary and does not warrant further investigation. For structures located in cohesive soils or permanently submerged conditions the hydrostatic loading duration warrants a more rigorous analysis.*

## 3.17.7 Wall Thickness Requirements

A. Determine the wall thickness for rectangular drainage structures based on the design requirements, except that the following minimum thickness requirements have been established to allow for constructability and better distribution of reinforcement:

| Clear Span | Minimum Wall Thickness |
|---|---|
| ≤ 6 ft. | 6 in. (Precast); 8 in. (C.I.P.) |
| > 6 ft. to ≤ 10 ft. | 8 in. |
| ≥ 10 ft. | 9 in. |

B. A single layer of reinforcing is permitted for 8 inch thick walls when the reinforcing is located in the center third of the wall thickness.

C. Increase the minimum wall thickness for structures located in extremely aggressive environments to accommodate a 3" concrete cover.

## 3.17.8 Slab Thickness Requirements

A. Determine the slab thickness for drainage structures based on the design requirements, except that the following minimum thickness requirements have been established to allow for constructability and better distribution of reinforcement:

| Clear Span | Minimum Slab Thickness |
|---|---|
| ≤ 6 ft. | 6 in. (Precast); 8 in. (C.I.P.) |
| > 6 ft. to ≤ 10 ft. | 8 in. |
| ≥ 10 ft. | 9 in. |

B. A single layer of reinforcing is permitted for 12 inch thick slabs when the reinforcing is located adjacent to the tension face under permanent loading (underside for top slabs, upper face for bottom slabs).

C. Increase the minimum slab thickness for structures located in extremely aggressive environments to accommodate a 3" concrete cover.

## 3.17.9 Concrete Strength and Class

Design drainage structures for the following concrete strengths:

Precast:

f'c = 3,400 (Class II) or 4,000 psi (ASTM C478) in Slightly and Moderately Aggressive Environments;

f'c = 5,500 psi (Class IV) in Extremely Aggressive Environments.

Cast-in-place:

f'c = 3,400 psi (Class II) in Slightly and Moderately Aggressive Environments;

f'c = 5,500 psi (Class IV) in Extremely Aggressive Environments.

Designation of an Extremely Aggressive Environments for drainage structures must be approved by the District Drainage Engineer and a note added to the plans in accordance with the ***PPM***.

| **Modification for Non-Conventional Projects:** |
| --- |
| Delete last paragraph of ***SDG*** 3.17.9 and see the RFP for requirements. |

## 3.17.10 Reinforcement

A. Reinforcement shall be either deformed bar reinforcement, welded wire reinforcement (plain), deformed welded wire reinforcement or structural fiber reinforcing. Use a yield strength of 60 ksi for deformed bar reinforcement, 65 ksi for smooth welded wire reinforcement and 70 ksi for deformed welded wire reinforcement. Structural fiber reinforcing is limited to circular structures with a maximum inside diameter of 12 feet and rectangular structures with a maximum inside wall length of 6 feet.

B. The maximum service load stress in the design of reinforcement for crack control shall be in accordance with ***LRFD*** [12.11.3] using the following exposure factors for ***LRFD*** [5.7.3.4]:

   $\gamma_e$ = 1.00 (Class 1) for inside face reinforcement in slightly to moderately aggressive environments, and extremely aggressive environments where a minimum 3 inches of concrete cover is provided;

   $\gamma_e$ = 0.75 (Class 2) for outside face reinforcement in all environments.

C. Investigation of fatigue in accordance with ***LRFD*** [5.5.3.2] is not required for buried reinforced concrete drainage structures.

*Commentary: AASHTO voted to exclude box culverts from fatigue design in May 2008. This determination has been extended to other buried drainage structures by the Department.*

D. Minimum reinforcement shall be provided in accordance with ***LRFD*** [5.7.3.3.2] except for structures using structural fiber reinforcing.

E. Provide distribution reinforcement as described in ***LRFD*** [9.7.3.2], transverse to the main flexural reinforcement in the bottom of the top slab of rectangular drainage structures for earth fill cover heights less than two feet.

F. Do not use shear reinforcement in concrete drainage structures. Slab and wall thicknesses must be designed to have adequate concrete shear capacity in accordance with ***LRFD*** [5.8] and [5.14.5.3].

## 3.17.11 Structural Fiber Reinforcement

A. Design structures utilizing structural fiber reinforcement in accordance with Sections 5.6 and 7.7 of the *fib* Model Code 2010 (CEB-FIP). As an alternative to the *fib* Model Code 2010 design method and testing criteria, certain minor precast structure types can utilize fiber reinforced concrete design methods based on Evaluation Reports (ER) from providers accredited to ISO/IEC Guide 65 (including ICC-ES and IAPMO ES).

The residual strength of fiber–reinforced concrete test beams will be determined in accordance with ASTM C 1399 (Standard Test Method for Obtaining Average Residual-Strength of Fiber-Reinforced Concrete).The walls and bottom slabs of the following structure types can be designed using an equivalent strength basis when Evaluation Reports are provided to the EOR:

1. Type P Structures Bottoms (***Design Standards*** Index 200);
2. Manhole Risers, Grade Rings and Conical Tops equal or less than 4'-6" diameter (***Design Standards*** Index 201 Type 8)
3. Drainage Inlet Bottoms with inside wall lengths equal or less than 4'-6" (***Design Standards*** Indexes 212, 213, 217-Types 1 & 2, and 218 - 221);
4. Ditch Bottom Inlets Types A, B, C, D, E, F & J (***Design Standards*** Index 230, 231, 232, 233 & 234);
5. U-Type Concrete Endwalls (***Design Standards*** Index 261);
6. Flared End Sections (***Design Standards*** Index 270).

B. Plain carbon steel fibers are allowed in slightly and moderately aggressive environments. Galvanized, stainless steel, or carbon FRP fibers are permitted in all environmental classifications. Other non-corrosive fiber materials such as basalt may be considered when approved by the State Materials Office. Polymer fibers are not permitted as primary structural reinforcement for buried structures due to the potential for long term creep.

C. A Technical Special Provision (TSP), reviewed and approved by the State Materials Office, will be required for the Contract Documents to establish and verify the characteristic material properties such as the residual flexural tensile strength corresponding to the load-crack mouth opening displacement (CMOD) of the fiber-reinforced concrete mix design. For precast concrete elements, producers must submit shop drawings for design approval to the State Drainage Engineer based on an approved FRC Mix Design and include a technical specification to establish and verify the characteristic material properties in lieu of a TSP. These documents and any other necessary guidelines for production and quality control will be maintained as an addendum to the producer's Quality Control Plan.

D. These requirements are intended for wet-cast concrete only.

## 3.17.12 Deflection Limitations [2.5.2.6.2]

Top slab deflection due to the live load plus impact must not exceed 1/800 of the design span, except on culverts located in urban areas used in part by pedestrians, where the ratio must not exceed 1/1000 of the design span. Deflections shall be determined in accordance with ***LRFD*** [2.5.2.6.2] and may utilize gross section properties.

## 3.17.13 Analysis and Boundary Conditions

A. Analyze drainage structures using elastic methods and model the cross section as a plane frame or plate model (2D) using gross section properties.

B. For plane frame models of structure walls, assume that the presence of pipe openings increases the flexural moments at the corners by 10% and the midspan flexural moments by 25%.

*Commentary: Finite Element Analysis by the SDO investigating several configurations of rectangular structures concluded that pipe openings in opposite or adjacent faces resulted in localized peak moment increases of approximately 10% of the corner moments and 20% to 30% of the midspan moments.*

C. In lieu of a more refined analysis the following equation may be used for determining the maximum flexural moments ($M_{x.max}$) for horizontal reinforcing in the walls of rectangular structures with different aspect ratios, assuming uniform pressure distribution:

$M_{x.max} = \Psi_s * w * L_{long}^2 / K_m$ (lbf-ft)

where:

$\Psi_s$ = Moment reduction factor for locations adjacent to slabs

$w$ = Uniform lateral earth pressure (psf)

$L_{long}$ = Clear distance between walls (longest span) (ft.)

$L_{short}$ = Clear distance between walls (longest span) (ft.)

$K_m$ = Flexural moment coefficient from the following table:

| Wall Aspect Ratio[1] ($L_{short}/L_{long}$) | Positive Flexural Moment Coefficient ($K_m$, Mid Span) | Negative Flexural Moment Coefficient ($K_m$, Corners) |
|---|---|---|
| 0.1 | 20.3 | 13.2 |
| 0.2 | 18.2 | 14.3 |
| 0.3 | 16.9 | 15.2 |
| 0.4 | 16.2 | 15.8 |
| 0.5 | 16.0 | 16.0 |
| 0.6 | 16.2 | 15.8 |
| 0.7 | 16.9 | 15.2 |
| 0.8 | 18.2 | 14.3 |
| 0.9 | 20.3 | 13.2 |
| 1.0 | 24.0 | 12.0 |

1. Interpolation for determining $K_m$ with other aspect ratios is permitted.

Flexural moments along the horizontal axis of structure walls, may be reduced adjacent to slab connections when hinged boundary conditions are assumed. In lieu of a more refined analysis the following values may be used for design:

| Height Above Slab/Span[1] ($y/L_{long}$) | Flexural Moment Reduction Factor ($\Psi_s$ , Mid Span) |
|---|---|
| > 0.50 | 1.00 |
| 0.45 | 0.90 |
| 0.30 | 0.75 |
| 0.15 | 0.50 |

1. Interpolation for determining $\Psi_s$ with other aspect ratios is permitted.

The minimum flexural moment for the vertical reinforcing in structure walls without full moment connections to bottom or top slabs must be at least 50% of the maximum midspan moment:

$M_{y.max} = 0.50*w*L_{long}^2/K_m$ (lbf-ft)

D. For walls with length to height ratios less than 1.2, and bottom slabs with length to width ratios less than 1.5, two-way bending may be assumed. Unless the wall reinforcing is fully developed in the adjoining slab, the boundary conditions at these connections must be modeled as pinned or hinged connections.

## 3.18 PERIMETER WALL DESIGN

### 3.18.1 Scope [15.1]

Design all perimeter walls using the general requirements of ***PPM*** Volume 1, Chapter 32. Design precast concrete perimeter walls and the foundations of masonry perimeter walls using the structural design requirements of ***LRFD*** Chapter 15 as modified by the ***SDG***. Design masonry perimeter walls using the structural design requirements of ACI 530/530.1.

### 3.18.2 General Features - Panel Height [15.4] and Post Spacing

Typical post spacing measured from centerline to centerline of posts is 20 feet. Actual post spacing at corner posts may vary slightly to optimize the use of standard panel lengths. Use post spacings less than 20 feet only at changes in horizontal alignment, wall terminations or to accommodate steep grades.

Add the following section to ***LRFD*** [15.4]:

Total wall height above the ground line is limited to 8 ft. Precast walls may be built using two equal height panels or a single full height panel.

### 3.18.3 General Features - Concrete Strength and Class [15.4]

Add the following section to ***LRFD*** [15.4]:

All precast concrete perimeter wall components shall be Class IV as defined in ***Specifications*** Section 346. The concrete cover shall be per ***SDG*** Table 1.4.2-1.

### 3.18.4 Wind Loads [3.8.1][15.8.2] (Rev. 01/17)

See ***SDG*** 2.4.1 for wind loads on ground mounted perimeter walls.

### 3.18.5 Vehicular Collision Forces [15.8.4]

In ***LRFD*** [15.8.4], replace paragraphs 4 through 9 with the following:

On flush shoulder roadways, locate perimeter walls outside the clear zone, and as close as practical to the right-of-way line. On urban curbed roadways, the front face of the perimeter wall posts shall be a minimum of 4 feet behind the face of the curb. Additional setbacks may be required to meet minimum sidewalk requirements.

### 3.18.6 Foundation Design [15.9]

Add the following to ***LRFD*** [15.9.1]:

Use the FDOT ***Soils and Foundations Handbook***, Appendix B for design of auger cast piles.

### 3.18.7 Lateral Earth Pressures [3.11.5.10]

In the first and second sentence of ***LRFD*** [3.11.5.10], change "may be used" to "shall be used".

## 3.19 CONNECTIONS BETWEEN PRECAST ELEMENTS

A. Make connections between individual precast elements using reinforced and or post-tensioned closure pours, grouted reinforced pockets or voids, or commercially available reinforcing steel mechanical couplers, e.g. grouted sleeve couplers.

B. Form voids for making connections between precast elements using removable corrugated ducts or pipes or wedge shaped forms.

*Commentary: Although these requirements are written for connections that are primarily used between precast substructure elements, the concepts and requirements are also applicable to superstructure elements. See also* ***SDM*** *Chapter 25.*

# 4 SUPERSTRUCTURE - CONCRETE

## 4.1 GENERAL

This Chapter contains information related to the design, reinforcing, detailing, and construction of concrete components. It also contains deviations from ***LRFD*** that are required in such areas as deck reinforcing and construction, pretensioned concrete components, and post-tensioning design and detailing.

### 4.1.1 Concrete Cover

See ***SDG*** Table 1.4.2-1 Minimum Concrete Cover in ***SDG*** 1.4 Concrete and Environment.

### 4.1.2 Reinforcing Steel [5.4.3]

See ***SDG*** 1.4.1 for Reinforcing Steel requirements.

### 4.1.3 Girder Transportation

The EOR is responsible for investigating the feasibility of transportation of heavy, long and/or deep girders. In general, the EOR should consider the following during the design phase:

A. Whether or not multiple routes exist between the bridge site and a major transportation facility.

B. That the transportation of girders longer than 145 feet or weighing more than 160,000 pounds requires coordination through the Department's Permit Office during the design phase of the project. Shorter and/or lighter girders may be required if access to the bridge site is limited by roadway(s) with sharp horizontal curvature or weight restrictions.

C. Routes shall be investigated for obstructions for girder depths exceeding 9'-0", or if posted height restrictions exist on the route.

D. Size precast sections of horizontally curved spliced U-girders such that the total hauling width does not exceed 16 feet.

*Commentary: Length of travel significantly increases the difficulty to transport girders. Alternative transportation should be considered as well for heavy, long and/or deep girders. Please note that transportation of girders weighing more than 160,000 pounds may require analysis by a Specialty Engineer, bridge strengthening, or other unique measures.*

*When the use of heavy, long and/or deep girders is being evaluated and transportation of the girders over land is required, contact at least one prestressed girder manufacturer and ask for their input regarding girder transportation. At least one combination of viable casting location and transportation route is required.*

### 4.1.4 Shear Design [5.8.3] (Rev. 01/17)

A. When calculating the shear capacity, use the area of stirrup reinforcement intersected by the distance $\mathbf{0.5d_v}\cot\theta$ on each side of the design section, as shown in ***LRFD*** [Figure C5.8.3.2-2].

B. Use twin leg closed stirrups or multiple sets of twin leg closed stirrups as shear reinforcement in beam members except where open stirrups are required to avoid conflicts with other components, e.g. in pile bent caps directly over the tops of the piles and in post-tensioned beams where access is required for PT tendon installation. Do not use single leg stirrups.

C. Use the following methodology to determine the transverse spacings of shear reinforcement in beam members:

| **Nominal Shear Stress Range** | **Maximum Transverse Spacing of Stirrup Legs $S_w$ as shown in Figure 4.1.4-1** |
|---|---|
| $v_n \leq 0.08\sqrt{f'_c}$ | $S_w \leq 42"$ |
| $0.08\sqrt{f'_c} < v_n \leq 0.16\sqrt{f'_c}$ | $S_w \leq d_v$ or 24", whichever is less |
| $v_n > 0.16\sqrt{f'_c}$ | $S_w \leq 0.5d_v$ or 12", whichever is less |

Where: $v_n$ = Nominal shear stress = $\dfrac{V_u}{\phi b_v d_v}$

$V_u$ = Factored shear force per ***LRFD*** Chapter 5

$b_v$ = Effective web width per ***LRFD*** Chapter 5

$d_v$ = Effective shear depth per ***LRFD*** Chapter 5

$f'_c$ = Compressive strength of concrete per ***LRFD*** Chapter 5

$\phi$ = Resistance factor per ***LRFD*** Chapter 5

## Figure 4.1.4-1 Shear Reinforcement Layout in Beam Members

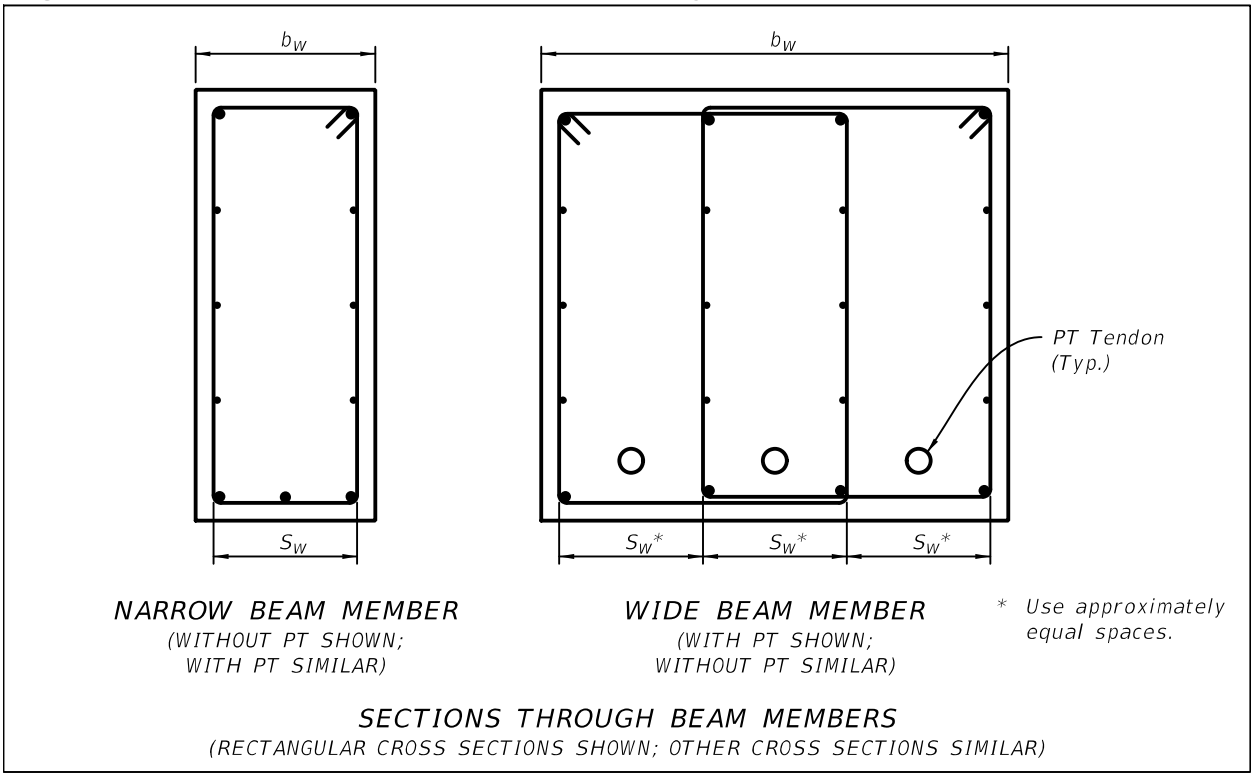

### 4.1.5 Minimum Reinforcement Requirements [5.7.3.3.2]

A. Apply the minimum reinforcement requirements of ***LRFD*** [5.7.3.3.2] to all sections being analyzed except at the ends of simply supported bridge girders.

B. The length of the girder from the simply supported end for which the minimum reinforcement will not be checked is defined below.

   1. Do not check the minimum reinforcing for prestressed concrete girders for a distance equal to the bonded development length (e.g. for 270 ksi strand with $f_{pe}$ = 157 ksi, 1/2" dia, strand yields 11.0 feet and 0.6" dia. yields 13.2 feet) from the ends of the simply supported girder.

   2. Do not check the minimum reinforcing for reinforced concrete girders for a distance equal to 2.5 times the superstructure depth from the centerline of bearing of the simply supported end.

C. For span lengths less than 27 feet for simple span bridges, check the minimum reinforcement at mid-span.

*Commentary: The use of a minimum reinforcement check was developed to ensure a ductile failure mode for lightly reinforced deep beams. Bridge girders are slender and do not generally meet the definition of a deep beam. Deep beams are defined as members having a clear span less than 4 times the overall depth (as defined by ACI 318). The use of the minimum reinforcing check has evolved in the specifications from checking the critical section to checking every section. This evaluation at every section is justified in buildings where heavy concentrated loads may be present near supports. In bridges, this condition does not exist and the critical section for bending is not near the support for simply supported bridge beams. The ends of simply supported bridge girders are dominated by shear, not bending moment. At these locations it is unnecessary to check minimum reinforcing for bending in an area dominated by shear.*

### 4.1.6 Dapped Beam Ends

Dapped beam ends are not permitted.

### 4.1.7 Continuity of Precast Beams

A. Use only post-tensioning to splice beam segments within simple spans and/or to establish continuity between adjacent spans except for channel span units as defined below. The post-tensioning must extend the full length of single simple spans, and the full length of continuous units composed of adjacent spans.

B. For channel span units subject to vessel impact loads in excess of 1,500 kips, establish continuity between adjacent spans using one of the following techniques:

   1. Use full or partial length post-tensioning.

   2. Use prestressed simple span concrete beams made continuous only for live load. In this method, the beams are required to be a minimum of 90 days old when the deck is cast to minimize detrimental consequences of time dependent effects.

C. If prestressed simple span concrete beams made continuous for live load are used, provide the following:

1. Provide beams of the same type, depth and spacing for all spans within the main span unit.
2. Provide full depth continuity diaphragms monolithic with the bridge deck at all internal supports.
3. Provide bottom tension ties between beam ends in adjacent spans over the interior supports. Design the ties using the simplified method per ***LRFD*** [5.14.1.4.4] and including the effects of Temperature Gradient per ***SDG*** 2.7.2.
4. Design deck reinforcement in the negative moment regions to resist the force effects due to live load, superimposed dead load and temperature.
5. Show a deck and diaphragm casting sequence in the plans using one of the following options:

   Option 1:

   a. Cast the positive moment regions of the deck after the beams have reached a minimum age of 90 days. The individual positive moment deck pours in a continuous unit may be made concurrently or sequentially.
   b. Cast the continuity diaphragms and the associated negative moment regions of the deck without a construction joint between them after the positive moment regions of the deck have cured for a minimum of 72 hours. The individual combination diaphragm and deck pours in a continuous unit may be made concurrently or sequentially.

   Option 2:

   a. Cast the deck on one of the end spans of the continuous unit up to the first continuity diaphragm with the pour allowed to proceed in either direction after the beams have reached a minimum age of 90 days.
   b. Show the deck on the second span and the first continuity diaphragm to be cast without a construction joint between the deck and the diaphragm. Show the deck pour starting at the far end of the second span, proceeding towards the end span and culminating with pouring of the continuity diaphragm after the end span has cured for a minimum of 72 hours.
   c. Repeat step "b" for successive spans in the continuous unit.

## 4.1.8 Crack Control (Rev. 01/17)

A. In ***LRFD*** [5.7.3.4], change the maximum service limit state stress ($f_{ss}$) to 0.80 $F_y$ for steel reinforcement with $F_y$ < 75 ksi. Use a Class 1 exposure condition for all location/components, except those listed as requiring a Class 2 exposure condition. Any concrete cover thickness greater than the minimum required by ***SDG*** Table 1.4.2-1 may be neglected when calculating $d_c$ and h, if a Class 2 exposure condition is used.

A Class 2 exposure condition may be used in lieu of a Class 1 exposure condition, when the minimum concrete cover required by ***SDG*** Table 1.4.2-1 is used. See ***SDG*** 1.4.4 for Mass Concrete requirements.

B. Check tension related to transverse analysis in Florida Slab Beam and other prestressed slab beam/unit superstructures using Service I Limit State.

*Commentary: This requirement is similar to the **LRFD** requirement for checking tension related to transverse analysis of segmental girders.*

### 4.1.9 Expansion Joints

Expansion joints within spans, i.e. ¼ point hinges, are not allowed.

## 4.2 DECKS [5.13.1][9.7]

### 4.2.1 Bridge Length Definitions

For establishing profilograph and deck thickness requirements, bridge structures are defined as Short Bridges or Long Bridges. The determining length is the length of the bridge structure measured along the Profile Grade Line (PGL) from front face of backwall at Begin Bridge to front face of backwall at End Bridge of the structure. Based upon this established length, the following definitions apply:

A. Short Bridges: Bridge structures less than or equal to 100 feet in PGL length.

B. Long Bridges: Bridge structures more than 100 feet in PGL length.

### 4.2.2 Deck Thickness Determination

A. For new construction of "Long Bridges" except pedestrian bridges and movable spans, the minimum thickness of bridge decks cast-in-place (C.I.P.) on beams or girders is 8½-inches. The 8½-inch deck thickness includes a 2 1/2-inch cover on the top of the deck, the top one-half inch of which is a sacrificial thickness. The upper one-quarter inch of this sacrificial thickness will be planed-off per ***Specifications*** Section 400; consider this as a temporary dead load that will be removed. The lower one-quarter inch of the sacrificial deck thickness may or may not be planed-off per ***Specifications*** Section 400; include this as a long-term permanent dead load. Except for post-tensioned structures, omit the entire ½-inch sacrificial thickness from the superstructure section properties. For post-tensioned structures, design for the worst case using section properties with and without the ½-inch sacrificial thickness in place.

B. For new construction of "Short Bridges", the minimum thickness of bridge decks cast-in-place (C.I.P.) on beams or girders is 8-inches.

C. For "Major Widenings" and "Minor Widenings" (see criteria in ***SDG*** Chapter 7) the thickness of C.I.P. bridge decks on beams or girders is 8-inches. However, whenever a Major Widening is selected by the Department to meet profilograph requirements, a minimum deck thickness of 8½-inches to meet the requirements and design methodology for new construction of the preceding paragraph, must be used.

| Modification for Non-Conventional Projects: |
| --- |
| Delete ***SDG*** 4.2.2.C and insert the following:<br>C. For "Major Widenings" and "Minor Widenings" (see criteria in ***SDG*** Chapter 7) the thickness of C.I.P. bridge decks on beams or girders is 8-inches unless otherwise indicated in RFP. |

D. The thickness of C.I.P. bridge decks on beams or girders for deck rehabilitations will be determined on an individual basis but generally will match the thickness of the adjoining existing deck.

E. For pedestrian bridges regardless of length, the minimum thickness of bridge decks is 6-inches with no allowance for a one-half inch sacrificial thickness.

F. For bascule spans regardless of length, provide a minimum concrete deck cover of 2-inches with no allowance for a one-half inch sacrificial thickness.

G. The thickness of all other C.I.P. or precast concrete bridge decks is based upon the reinforcing cover requirements of ***SDG*** Table 1.4.2-1.

H. Establish bearing elevations by deducting the determined thickness before planing, from the Finish Grade Elevations required by the Contract Drawings.

### 4.2.3 Grooving and Planing

A. New cast in place concrete bridge decks that will not be surfaced with asphaltic concrete will be either grooved, or planed and grooved, in accordance with ***Specifications*** Section 400-15. See ***SDG*** 7.7 for the treatment of new portions of bridge decks on widening projects.

B. Quantity Determination: Determine the quantity of bridge deck grooving in accordance with the provisions of ***Specifications*** Section 400-22. Use Pay Item No. 400-7 - Bridge Deck Grooving for short bridges and Pay Item No. 400-9 - Bridge Deck Grooving and Planing for long bridges.

| Modification for Non-Conventional Projects: |
| --- |
| Delete ***SDG*** 4.2.3.B |

### 4.2.4 Deck Design - General [5.10.8][6.10.1.7][9.7.2][9.7.3]

A. Design all C.I.P. bridge decks on beams or girders using the Traditional Design Method of ***LRFD*** [9.7.3]. Use of the Empirical Design Method per ***LRFD*** [9.7.2] is not permitted.

*Commentary: The empirical design method is not permitted because of the potential for future widening or phased construction and associated traffic control impacts in order to comply with **LRFD** [9.7.2.4].*

B. Design temperature and shrinkage reinforcement for C.I.P. decks per ***LRFD*** [5.10.8] except do not exceed 12-inch spacing and the minimum bar size is No. 4.

C. For continuous beam or girder superstructures, any location where the top of the deck is in tension under any combination of dead load and live load is considered a negative flexural region.

D. Provide thickened deck ends at locations of deck discontinuity that are not supported by full depth diaphragms. See ***SDM*** Chapter 15 for thickened deck end details for use with Florida-I Beams. Use similar details for decks on steel girders, AASHTO Type II beams and Florida-U Beams (between beams). Do not thicken the deck at intermediate supports within simple span units where the deck is continuous.

E. To minimize shrinkage and deflection induced cracking, develop a designated casting sequence for decks on continuous beam/girder superstructures and simple span beam/girder superstructures with continuous decks. Indicate on the plans the sequence and direction of each pour so as to minimize cracking in the freshly poured concrete and previously cast sections of deck or superstructure. Provide construction joints as required to limit the volume of concrete cast in a given pour to between 200 cy and 400 cy.

*Commentary: Casting sequences and the location of the construction joints should be sized so that the concrete can be placed and finished while the concrete is in a plastic state and within an 8 hour work shift. A reasonable limit on the size of a superstructure casting is 200 cy to 400 cy. For small projects, the 200 cy per day production rate is a reasonable upper casting limit. For larger projects, the 400 cy per day maximum casting volume may be more reasonable. Plan the location of construction joints so the concrete can be placed using a pumping rate of 60 cy/hr for each concrete pumping machine. Site specific constraints (e.g. lane closure restrictions on the lower roadway, etc.) should be taken into account when determining the size of a deck casting and/or location of construction joints.*

*Providing construction joints in the Plans as specified will allow most Contractors to accomplish the work without the need for extra equipment or personnel. The use of larger or combined pours, if proposed by a Contractor, should be considered and may be acceptable provided that the necessary engineering work has been performed by the Contractor's Engineer, e.g. recalculation of camber and deflection diagrams for continuous girders, incorporation of additional reinforcing steel and or sealed V-grooves for crack control, etc.*

| Modification for Non-Conventional Projects: |
| --- |
| Delete ***SDG*** 4.2.4.E and Commentary and insert the following:<br>E. To minimize shrinkage and deflection induced cracking, develop a designated casting sequence for decks on continuous beam/girder superstructures and simple span beam/girder superstructures with continuous decks. Indicate on the plans the sequence and direction of each pour so as to minimize cracking in the freshly poured concrete and previously cast sections of deck or superstructure. |

F. When checking longitudinal tension stresses in decks and when developing deck casting sequences and camber or build-up diagrams for continuous beam or girder superstructures, use the appropriate deck concrete strength based on the day the structure is being analyzed. Use the values in Table 4.2.4-1 to approximate the deck concrete strength gain (use interpolation to obtain other values). See also ***SDG*** 5.2.

### Table 4.2.4-1 Deck Concrete Strength Gain Values

| Day | Class II (Bridge Deck) (psi) | Class IV (psi) |
|---|---|---|
| 3 | 2740 | 3720 |
| 6 | 3180 | 4210 |
| 9 | 3610 | 4340 |
| 12 | 3840 | 4550 |
| 15 | 4020 | 4820 |
| 18 | 4160 | 5040 |
| 21 | 4290 | 5220 |
| 24 | 4390 | 5390 |
| 27 | 4500 | 5500 |

## 4.2.5 Decks Supporting Traffic Railings (Rev. 01/17)

A. For decks supporting traffic railings, the minimum transverse reinforcing in the top of deck ($A_s$) shown in Table 4.2.5-1 may be used without further analysis where the indicated minimum deck thicknesses and maximum deck overhangs are provided.

## Table 4.2.5-1 Minimum Transverse Reinforcing Required for Decks Supporting Traffic Railings

| Traffic Railing (Test Level) | Minimum Deck Thickness[1] (inches) | Railing located adjacent to Coping Line | | Railing located inside the exterior beam or girder[2] |
|---|---|---|---|---|
| | | Maximum Deck Overhang Measured from CL Beam or Girder[2] (except as noted) (feet) | Minimum $A_s$[3] (sq in / linear ft) | Minimum $A_s$ (sq in / linear ft) |
| 32" F-Shape (TL-4) | 8 | 6 | 0.80 | 0.48 |
| 32" Vertical Face (TL-4) | 8 (with 6-inch sidewalk) | 6 | 0.40[4] | N/A |
| 32" Corral Shape (TL-4) | 8 | 6 | 0.80 | 0.48 |
| 32" F-Shape Median (TL-4) | 8 | N/A | N/A | 0.40[5] |
| 8'-0" Noise Wall (TL-4) | 8 | 1.5 feet beyond outer edge of top flange of exterior beam or girder | 0.93[6] | 0.56 |
| | 10 | | 0.66[6] | 0.40 |
| 42" F-Shape (TL-5) | 10 | 6 | 0.75 | 0.45 |
| 42" Vertical Face (TL-4) | 8 (with 6-inch sidewalk) | 6 | 0.40[4] | N/A |
| 36" Single-Slope Median (MASH TL-4) | 8 | N/A | N/A | 0.51 |
| 36" Single-Slope (MASH TL-4) | 8 | 6 | 0.80 | 0.48 |
| 42" Single-Slope (MASH TL-5) | 10 | 6 | 0.93 | 0.56 |

1. The extra thickness required for deck planing is not included.
2. Or centerline exterior web of Florida U-beams, steel box girders, or U-girders.
3. If the required reinforcing is less than or equal to twice the nominal deck reinforcing, the extra reinforcing must be cut-off 12-inches beyond the midpoint between the two exterior beams or girders, or between the webs of an exterior Florida-U beam. If the required reinforcing is greater than twice the nominal deck reinforcing, then half of the extra reinforcing or up to 1/3 the total reinforcing must be cut-off midway between the two exterior beams or girders, or the webs of an exterior Florida-U beam. The remaining extra reinforcing must be cut off at 3/4 of the two exterior beam or girder spacing, or the webs of an exterior Florida-U beam, but not closer than 2 feet from the first cut-off.

4. Minimum reinforcing based on the 32" or 42" vertical face traffic railing mounted on a 6-inch thick sidewalk above an 8-inch deck with 2-inch cover to the top reinforcing in both the deck and sidewalk. Specify No. 4 Bars at 6-inch spacing placed transversely in the top of the raised sidewalk.
5. Minimum reinforcing required in both top and bottom of deck. Less reinforcing may be provided in the bottom, provided the sum of the top and bottom reinforcing is not less than 0.80 square inch per foot.
6. For the eight foot noise wall, the area of top deck reinforcing 6 feet each side of deck expansion joints must be increased by 30% to provide a minimum 1.21 square inches per foot for an 8-inch thick deck and 0.86 square inches per foot for a 10-inch thick deck. Evaluate the development length of this additional reinforcing and detail hooked ends for all bars when necessary.

B. In lieu of using the values shown in Table 4.2.5-1, or when the cantilever length exceeds the limits shown in Table 4.2.5-1 for all traffic railings except the 8'-0" Noise Wall, the following design values and methodology may be used to design the top transverse deck reinforcing for the traffic railing types listed.

## Table 4.2.5-2 Values for Designing Reinforcing Steel for Decks Supporting Traffic Railings

| Traffic Railing (Test Level) | Railing located adjacent to Coping Line | | Railing located inside the exterior beam or girder, or exterior web of Florida U-beams | | $L_c$ (ft) |
|---|---|---|---|---|---|
| | $M_c$ (kip-ft/ft) | $T_u$ (kips/ft) | $M_c$ (kip-ft/ft) | $T_u$ (kips/ft) | |
| 32" F-Shape (TL-4) | 15.7 | 7.1 | 9.4 | 4.3 | 5.0 |
| 32" Vertical Face (TL-4) | 16.9 | 7.1 | N/A | N/A | 5.0 |
| 32" Corral Shape (TL-4) | 15.7 | 7.1 | 9.4 | 4.3 | 5.0 |
| 32" F-Shape Median (TL-4) | N/A | N/A | 15.3 | 3.5 | 5.0 |
| 8'-0" Noise Wall (TL-4) | 20.1[1] | 5.9[1] | 12.1[1] | 3.5[1] | 13 |
| 42" F-Shape (TL-5) | 20.6 | 9 | 12.4 | 5.4 | 10.25 |
| 42" Vertical Face (TL-4) | 25.8 | 10.6 | N/A | N/A | 9 |
| 36" Single-Slope Median (MASH TL-4) | N/A | N/A | 12.5 | 4.8 | 5.4 |
| 36" Single-Slope (MASH TL-4) | 15.8 | 9.4 | 9.5 | 5.6 | 5.5 |
| 42" Single-Slope (MASH TL-5) | 27.5 | 11.0 | 16.5 | 6.6 | 11.1 |

1. For the 8'-0" noise wall, increase the ultimate deck moment and tensile force by 30% for a distance of 6 feet each side of all deck expansion joints, except on approach slabs.

Where:

**$M_c$** = Ultimate deck moment at the traffic railing face (gutter line) from traffic railing impact.

**$T_u$** = Ultimate tensile force to be resisted.

**$L_c$** = Critical length of yield line failure pattern per ***LRFD*** [A13.3.1]

The following relationship must be satisfied:

$$(T_u / \phi P_n) + (M_u / \phi M_n) \leq 1.0$$

Where:

$\phi = 1.0$

$P_n$ = Nominal tensile capacity of the deck (kips/ft.) over the distance $L_d$.

$$P_n = A_s f_y$$

$A_s$ = Area of transverse reinforcing steel in the top of the deck (sq. in.) within the distance $L_d$.

$f_y$ = The reinforcing steel yield strength (ksi).

$M_u$ = Total ultimate deck moment from traffic railing impact and factored dead load at the gutter line over the distance $L_d$ (kips-ft/ft).

$$M_u = M_c + 1.00 \times M_{DeadLoad}$$

$M_n$ = Nominal moment capacity of the deck at the gutter line determined by traditional rational methods for reinforced concrete (kip-ft/ft) over the distance $L_d$.

$L_d$ = Distribution length (ft):

Near a traffic railing open joint $L_d = L_c$ + traffic railing height + **2D**(tan 45º)

At open transverse deck joints $L_d = L_c$ + traffic railing height + **D**(tan 45º)

Where "**D**" equals the distance from the gutter line to the critical deck section. Along the base of the traffic railing at the gutter line **D** = 0.

C. When more than 50% of the total transverse reinforcing must be cut off, a minimum of 2 feet must separate the cut-off locations.

### 4.2.6 Decks on Simple Span Concrete Beam Superstructures

A. The use of C.I.P. decks that are continuous over two or more adjacent spans of simple span concrete beams is preferred. Determine the maximum length of the continuous deck based on the limitations of the expansion joints and bearings that are to be used.

*Commentary: The use of decks that are continuous over multiple simple span concrete beams, in conjunction with the following detailing and construction requirements, has been the typical successful practice on Florida bridges for decades. The beams supporting these decks are designed as simple spans for dead and live loads.*

B. When C.I.P. decks on simple span concrete beams are continuous over intermediate piers or bents, provide supplemental longitudinal reinforcing in the tops of the decks as follows:

1. Use No. 5 Bars placed between the continuous, longitudinal reinforcing bars in the top of the deck.
2. Use bars a minimum of 35 feet in length or 2/3 of the average span length, whichever is less.
3. Show the bars placed about the centerline of the intermediate pier or bent as shown in Figure 4.2.6-1.

**Figure 4.2.6-1 Schematic Plan View of Supplemental Longitudinal Bar Placement for Simple Span Concrete Beam Superstructures**

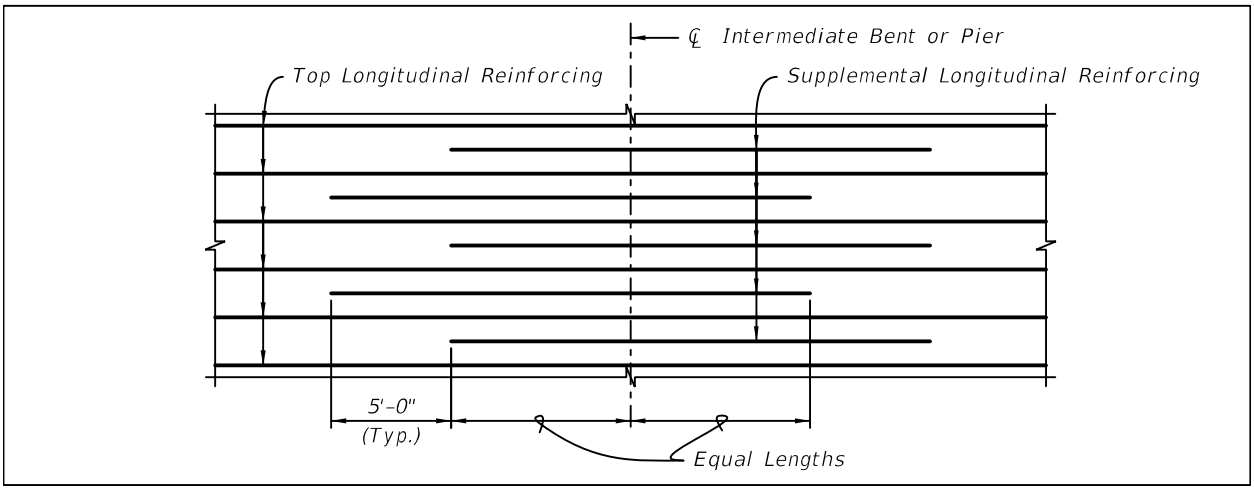


C. When C.I.P. decks on simple span concrete beams are cast continuous over intermediate bents or piers, include both of the following casting sequences in the plans for each continuous deck unit with a note stating that either casting sequence may be used at the Contractor's option. See also ***SDM*** 15.5 and ***SDM*** 15.8 for details.

1. Design and detail a casting sequence in which the continuous deck is cast in sections that extend the full length of each span with a construction joint located at each bent or pier. Show the casting sequence to begin with the span at one end of the continuous unit with the pour allowed to proceed in either direction. Show succeeding spans to be cast with the pour starting at the far end of the span and proceeding towards the previously cast span. Include the construction joint detail and call for its use at all intermediate bent or pier locations. Include a note stating that a minimum of 72 hours is required between adjacent pours in a given continuous deck unit.

2. Design and detail a casting sequence in which the continuous deck is cast for the full length of the unit without construction joints at each bent or pier. Include the tooled V-groove detail and call for its use at all intermediate bent or pier locations.

Modification for Non-Conventional Projects:

Delete ***SDG*** 4.2.6.C and insert the following:

C. When C.I.P. decks on simple span concrete beams are cast continuous over intermediate bents or piers, include one of the following casting sequences in the plans for each continuous deck unit. See also ***SDM*** 15.5 and ***SDM*** 15.8 for details.

1. Design and detail a casting sequence in which the continuous deck is cast in sections that extend the full length of each span with a construction joint located at each bent or pier. Show the casting sequence to begin with the span at one end of the continuous unit with the pour allowed to proceed in either direction. Show succeeding spans to be cast with the pour starting at the far end of the span and proceeding towards the previously cast span. Include the construction joint detail and call for its use at all intermediate bent or pier locations. Include a note stating that a minimum of 72 hours is required between adjacent pours in a given continuous unit.

2. Design and detail a casting sequence in which the continuous deck is cast for the full length of the unit without construction joints at each bent or pier. Include the tooled V-groove detail and call for its use at all intermediate bent or pier locations.

*Commentary: The Contractor's selection of an approved concrete design mix which ensures complete placement of deck concrete for the full length of the continuous deck is essential if the second casting sequence described above is used. See* ***Specifications*** *Section 400-7 for additional requirements.*

D. Develop build-up diagrams taking into account the theoretical deflections of the beams due to self weight, prestress forces and superimposed dead loads. See ***Design Standards*** Indexes 20199 and 20299 and the associated ***IDS*** for each standard.

## 4.2.7 Decks on Continuous Concrete Beam/Girder Superstructures

For continuous concrete beam/girder superstructures, develop build-up diagrams taking into consideration the deck casting sequence, time dependent effects, and the effect on the changing cross section characteristics of the superstructure. Assume a time interval of 3 days between successive pours in a given continuous unit. Use the appropriate deck concrete strength values from Table 4.2.4-1 and the project specific beam concrete strengths for the time dependent analysis. Include the following plan notes:

1. A minimum of 72 hours is required between successive pours in a given continuous unit.

2. The deck casting sequence may not be changed unless the Contractor's Specialty Engineer performs a new structural analysis, new build-up diagrams are developed, revised deck reinforcing steel layouts and bar lists are developed, and a new load rating is performed.

| Modification for Non-Conventional Projects: |
|---|
| Delete ***SDG*** 4.2.7 and insert the following:<br><br>For continuous concrete beam/girder superstructures, develop camber diagrams taking into consideration the deck casting sequence, time dependent effects, and the effect on the changing cross section characteristics of the superstructure. Include the following plan notes:<br><br>1. A minimum of 72 hours is required between successive pours in a given continuous unit.<br>2. The deck casting sequence may not be changed unless a new structural analysis is performed, new build-up diagrams are developed, revised deck reinforcing steel layouts and bar lists are developed, and a new load rating is performed.<br><br>*Commentary: Alternative deck casting methods including the use of simultaneous pours, continuous pours, retardant admixtures, etc. may be considered on a case by case basis.* |

*Commentary: Generally for continuous concrete beam/girder superstructures, all of the positive moment sections of the deck are cast first, followed by the negative moment sections.*

### 4.2.8 Decks on Simple Span and Continuous Steel Beam/Girder Superstructures

A. For simple span and continuous steel beam/girder superstructures, develop camber diagrams taking into consideration the deck casting sequence and the effect on the changing cross section characteristics of the superstructure. Include the following plan note for all steel beam/girder superstructures:

   The deck casting sequence may not be changed unless the Contractor's Specialty Engineer performs a new structural analysis, new camber diagrams are developed, revised deck reinforcing steel layouts and bar lists are developed, and a new load rating is performed.

   Include the following plan note for continuous steel beam/girder superstructures:

   A minimum of 72 hours is required between successive pours in a given continuous unit.

*Commentary: Generally for continuous steel girder superstructures, all of the positive moment sections of the deck are cast first, followed by the negative moment sections.*

Modification for Non-Conventional Projects:

Delete ***SDG*** 4.2.8.A and insert the following:

A. For simple span and continuous steel beam/girder superstructures, develop camber diagrams taking into consideration the deck casting sequence and the effect on the changing cross section characteristics of the superstructure. Include the following plan note for all steel beam/girder superstructures:

   The deck casting sequence may not be changed unless a new structural analysis is performed, new camber diagrams are developed, revised deck reinforcing steel layouts and bar lists are developed, and a new load rating is performed.

   Include the following plan note for continuous steel beam/girder superstructures:

   A minimum of 72 hours is required between successive pours in a given continuous unit.

*Commentary: Alternative deck casting methods including the use of simultaneous pours, continuous pours, retardant admixtures, etc. may be considered on a case by case basis.*

B. On continuous superstructures, check longitudinal tension stresses in previously cast sections of deck during the deck casting sequence per ***LRFD*** [6.10.3.2.4]. Assume a time interval of 3 days between successive pours in a given continuous unit. Use the appropriate deck concrete strength values from Table 4.2.4-1 for the longitudinal tension stress check.

C. For longitudinal reinforcing steel within the negative flexural regions of continuous, composite steel girder superstructures, comply with the requirements of ***LRFD*** [6.10.1.7] and [6.10.3.2.4]. Terminate supplemental longitudinal reinforcing as shown in ***SDG*** Figure 4.2.8-1.

## Figure 4.2.8-1 Schematic Plan View of Supplemental Longitudinal Bar Placement on Steel Superstructures

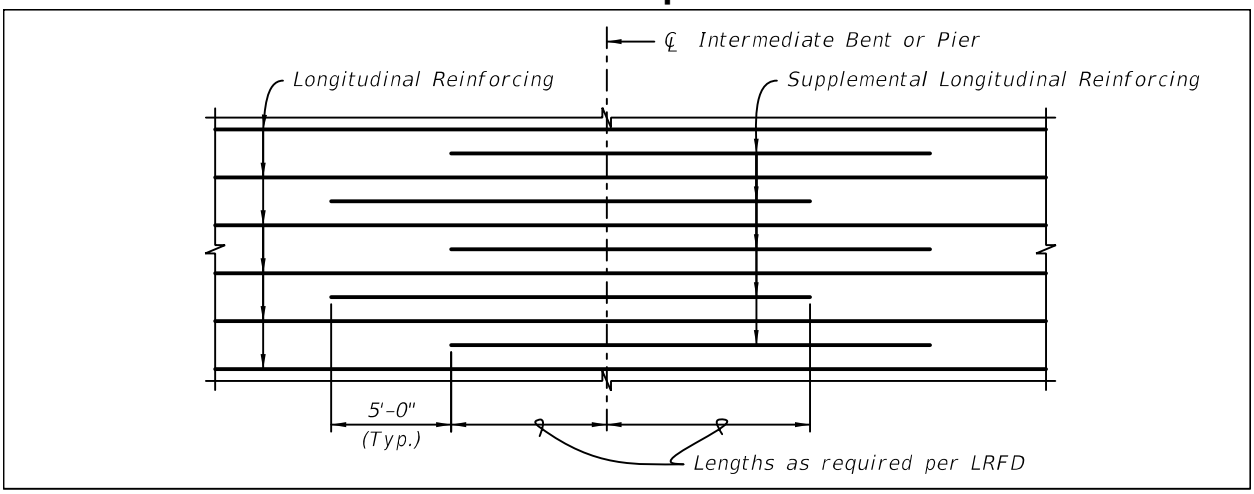


D. Units composed of multiple simple span steel girders with continuous decks are not allowed due to the flexibility of the girders.

### 4.2.9 Skewed Decks [9.7.1.3]

A. Reinforcing Placement when the Deck Skew is 15 Degrees or less:

Place the transverse reinforcement parallel to the skew for the entire length of the deck.

B. Reinforcing Placement when the Deck Skew is more than 15 Degrees:

Place the required transverse reinforcement perpendicular to the centerline of span. Since the typical required transverse reinforcement cannot be placed full-width in the triangular shaped portions of the ends of the deck at open joints, the required amount of longitudinal reinforcing must be doubled for a distance along the span equal to the beam spacing for the full width of the deck. For all bridges, except those with a thickened deck end as used with Florida-I beam simple span structures, three No. 5 Bars at 6-inch spacing, full-width, must be placed parallel to the end skew in the top mat of each end of the deck.

C. Regardless of the angle of skew, the traffic railing reinforcement cast into the deck need not be skewed.

### 4.2.10 Stay-in-Place Forms (Rev. 01/17)

A. Clearly state in the "General Notes" for each bridge project, whether or not stay-in-place forms are permitted for the project and how the design was modified for their use; e.g., dead load allowance.

B. Design and detail for the use of stay-in-place metal forms, where permitted, for all beam and girder superstructures (except segmental box girder superstructures) in all environments.

*Commentary: Polymer laminated non-cellular SIP metal forms are permitted for forming bridge decks of superstructures with moderately or extremely aggressive environmental classifications.*

| Modification for Non-Conventional Projects: |
|---|
| Delete ***SDG*** 4.2.10.B. |

C. Precast, reinforced concrete, stay-in-place forms may be used for all environmental classifications; however, the bridge plans must be specifically designed, detailed and prepared for their use.

D. Precast reinforced or prestressed concrete stay-in-place forms that are composite with bridge decks are not permitted.

E. Welding of S.I.P. form supports or connections to structural steel components is prohibited. See ***SDM*** Figure 15.9-3, Figure 15.9-4, Figure 15.9-5 and Figure 15.9-6.

## 4.2.11 Phase Constructed Decks

A. Provide a 2'-0" minimum wide deck closure pour between phase constructed sections of steel girder superstructures. Evaluate the need for deck closure pours between phase constructed sections of concrete beam superstructures.

*Commentary: The need for deck closure pours between sections of phase constructed concrete beam or steel girder superstructures is a function of the combination of span length and beam or girder stiffness and spacing.*

B. Within a given section of a phase constructed superstructure, account for potential deck casting induced differential deflections between the beam or girder along the phase construction line and the adjacent inner beam or girder. Similarly, account for potential differential deflections between adjacent sections of a phase constructed superstructure. If differential deflections are significant, show individual beam or girder dead load deflections per phase separately in the plans.

*Commentary: During deck casting, beams or girders along the phase construction line will be loaded differently than inner beams or girders if the tributary weight of wet concrete in the deck over them is not the same. For beams or girders of equal stiffness, the result of this will be a differential deflection which must be accounted for in the design and detailing of the superstructure. Beam and girder dead load deflections per phase are required in order for Contractors to set screed elevations and to ensure proper reinforcing cover.*

C. For decks constructed in phases and on bridge widenings, live load on the existing or previously constructed portions of the superstructure can induce vibration and deflection into the newly constructed portion of the superstructure. Evaluate these live load induced effects on deck casting and curing and minimize them where possible.

*Commentary: Where possible, live load should be shifted away from newly constructed portions of the deck during casting and curing operations so as to minimize or eliminate deflection and vibration effects. This can be a significant issue on long span or flexible superstructures, especially steel superstructures. Coordinate with the Traffic Control Plans.*

## 4.2.12 Drip Grooves (Rev. 01/17)

Provide a ½" deep continuous V-groove adjacent to deck copings as shown in Figure 4.2.12-1 for all concrete decks. For beam and girder supported concrete decks, provide sufficient cantilever length on both sides of the deck to accommodate the V-grooves.

## Figure 4.2.12-1 Drip Groove Details

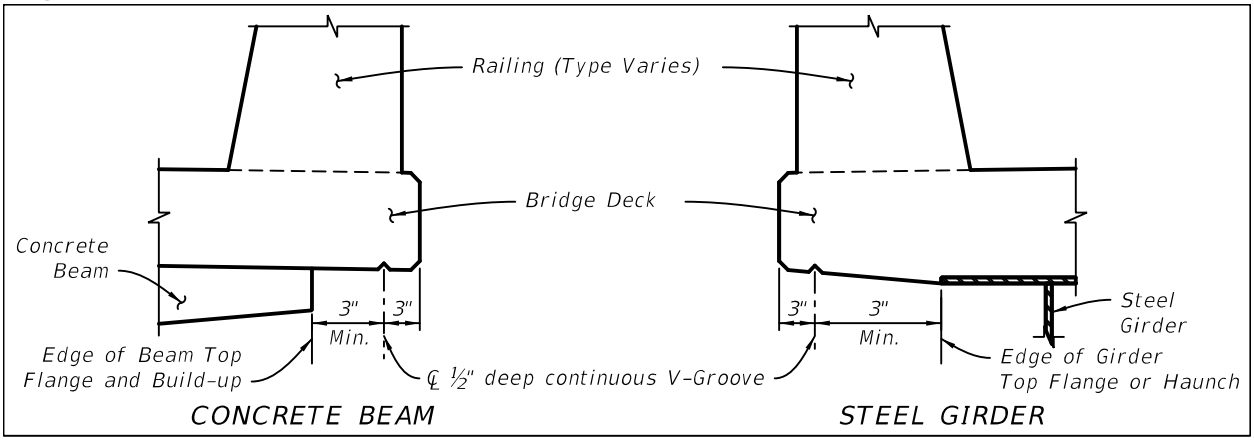


### 4.2.13 Decks on Perpendicularly Oriented Beams and Girders

Extend the deck across all beam or girder lines and utilize a constant deck thickness for superstructures where the supporting beams or girders are not parallel, or approximately parallel, to the direction of traffic on the bridge, e.g. bridges used in conjunction with braided ramps.

## 4.3 PRETENSIONED BEAMS

### 4.3.1 General (Rev. 01/17)

The Florida-I Beams and the AASHTO Type II Beam are the Department's standard prestressed concrete I-shaped beams and will be used in the design of all new bridges and bridge widenings with I-shaped beams as applicable. The Florida-U Beams are the Department's standard prestressed concrete U-shaped beams and will be used in the design of all new bridges and bridge widenings with U-shaped beams as applicable. Square all beam ends on Florida-I Beam and AASHTO Type II Beam simple span superstructures. Florida Bulb-T Beams and AASHTO Beams other than the AASHTO Type II Beam will not be used in new designs or widenings. The following requirements apply to simply supported, fully pretensioned beams, whether of straight or depressed (draped) strand profile, except where specifically noted otherwise.

| Modification for Non-Conventional Projects: |
|---|
| Delete the first paragraph of ***SDG*** 4.3.1 and insert the following:<br>The Florida-I Beams and the AASHTO Type II Beam are the Department's standard prestressed concrete I-shaped beams. The following requirements apply to simply supported, fully pretensioned beams, whether of straight or depressed (draped) strand profile, except where specifically noted otherwise. |

A. Use ASTM A416, Grade 270, low-relaxation, prestressing strands for the design of prestressed beams. Do not use stress-relieved strands. Use of straight-strand configurations is preferred over draped strand configurations.

B. Bridges with varying span lengths, skew angles, beam spacing, beam loads, or other design criteria may result in very similar individual designs. Consider the individual beam designs as a first trial subject to modifications by combining similar designs into groups of common materials and stranding based upon the following priorities:

1. 28-Day Compressive Concrete Strength ($\mathbf{f'_c}$)
2. Stranding (size, number, and location)
3. Compressive Concrete Strength at Release ($\mathbf{f'_{ci}}$)
4. Full Length Shielding (Debonding) of prestressing strands is prohibited.

*Commentary: Grouping beam designs in accordance with the priority list maximizes casting bed usage and minimizes variations in materials and stranding.*

| Modification for Non-Conventional Projects: |
|---|
| Delete ***SDG*** 4.3.1.B and associated Commentary and insert the following:<br>B. Full Length Shielding (Debonding) of prestressing strands is prohibited. |

C. In order to achieve uniformity and consistency in designing beams, the following parameters apply:

1. Provide a strand pattern that is symmetrical about the centerline of the beam. Utilize the standard strand pattern grids for standard FDOT prestressed beams. See the applicable ***Design Standards*** and the appropriate ***Instructions for Design Standards (IDS)*** for more information.

| Modification for Non-Conventional Projects: |
|---|
| Delete ***SDG*** 4.3.1.C.1 and insert the following:<br>1. Provide a strand pattern that is symmetrical about the centerline of the beam. |

2. Whenever possible, separate debonded strands in all directions by at least one fully bonded strand and debond strands outside the horizontal limits of the web. The percentage of debonded strands may exceed the recommended 25% limit in ***LRFD*** [5.11.4.3], provided that all strands within the horizontal limits of the web are fully bonded. In no case shall the percentage of debonded strands exceed 30%.

*Commentary: **LRFD** requires "the number of partially debonded strands should not exceed 25 percent of the total number of strands". Using the word "should" instead of "shall" signifies the specifications allow some deviation from the 25% limit. Recent testing of FIB's under FDOT Project BDK75 977-05 indicates the number of debonded strands can safely exceed the 25% limit when the **LRFD** [5.8.3.5] longitudinal reinforcement (tension tie) is provided and the fully bonded strands are grouped close to the web. The 30% debonding limitation is a conservative interim limit until further research is completed under NCHRP Project 12-91.*

3. When analyzing stresses of simple span beams, limit stresses in accordance with ***LRFD*** [Table 5.9.4.1.2-1] with the exception that for the outer 15 percent of the design span of straight longitudinal beams, tensile stress at the top of beam at

release may be taken as $\mathbf{0.24}\sqrt{\mathbf{f'_{ci}}}\,[\mathbf{ksi}]\,(\mathbf{7.5}\sqrt{\mathbf{f'_{ci}}}[\mathbf{psi}])$ when the lesser of ***LRFD*** [C5.9.4.1.2] or Table 4.3.1-1 minimum tension reinforcement is developed in the section.

## Table 4.3.1-1 Minimum Top Flange Longitudinal Reinforcing in Beam Ends

| Beam Type | Minimum $A_s$ ($in^2$) | Design Standard $A_s$ ($in^2$) |
|---|---|---|
| AASHTO Type II | 0.79 | 0.790 |
| FIB36 to FIB63 | 1.5 | 1.580 |
| FIB 72 & FIB78 | 2.1 | 2.100 |
| FIB 84 & FIB96 | 2.3 | 2.372 |
| FUB48 to FUB72 | 2.7 | 2.730 |

For transient loads during construction the tensile stress limit may be taken as $6\sqrt{f'_c}$ [psi]. It is not necessary to check tensile stresses in the top of simple span beams in the final condition.

*Commentary: Since the mid 1980's, the Department has allowed a limit* $\mathbf{12}\sqrt{\mathbf{f'_{ci}}}$ *[psi] tension in the top of the beam at release knowing the actual tension was less due to the additional compression provided by the top partially stressed (dormant) strands. Now that design software accounts for partially stressed top strands, a* $\mathbf{12}\sqrt{\mathbf{f'_{ci}}}$ *[psi] tension limit is no longer justified. When the minimum areas of tension reinforcement shown in the table are provided, refined analysis shows top tensile beam stresses are within reasonable limits. Since the method suggested in* ***LRFD*** *[C5.9.4.1.2] may give an unreasonably large required area of reinforcement at locations near the prestress transfer length, minimum reinforcement areas (mild and prestressed) are given in the table for FDOT standard beams.*

4. The minimum compressive concrete strength at release, $\mathbf{f'_{ci}}$, shall be the greater of 4.0 ksi or 0.6 $\mathbf{f'_c}$. The maximum design concrete compressive strength at release shall be the lesser of 0.8 $\mathbf{f'_c}$ or 6.0 ksi.

| Modification for Non-Conventional Projects: |
|---|
| Delete ***SDG*** 4.3.1.C.4 and insert the following:<br>4. The minimum compressive concrete strength at release, $\mathbf{f'_{ci}}$, shall be the greater of 4.0 ksi or 0.6 $\mathbf{f'_c}$. |

5. Design and specify prestressed beams to conform to concrete classes and related compressive strengths of concrete as shown in ***SDG*** Table 1.4.3-1.

| Modification for Non-Conventional Projects: |
|---|
| Delete ***SDG*** 4.3.1.C.5 and insert the following:<br>5. Design and specify prestressed beams to conform to classes and related strengths of concrete as shown in ***SDG*** Table 1.4.3-1 as minimum values. |

6. When calculating the Service Limit State capacity for pretensioned concrete flat slabs and girders, use the transformed section properties as follows: at strand transfer; for calculation of prestress losses; for live load application. For precast, pretensioned, normal weight concrete members designed as simply supported beams, use ***LRFD*** [5.9.5.3], Approximate Estimate of Time-Dependent Losses. For all other members use ***LRFD*** [5.9.5.4] with a 180-day differential between girder concrete casting and placement of the deck concrete.

*Commentary: The FDOT cannot practically control, nor require the Contractor to control, the construction sequence and materials for simple span precast, prestressed beams. To benefit from the use of refined time-dependent analysis, literally every prestressed beam design would have to be re-analyzed using the proper construction times, temperature, humidity, material properties, etc. of both the beam and the yet-to-be-cast composite slab.*

7. Stress and camber calculations for the design of simple span, pretensioned components must be based upon the use of transformed section properties.
8. When wide-top beams such as Florida-I, bulb-tees and AASHTO Types V and VI beams are used in conjunction with stay-in-place metal forms, evaluate the edges of flanges of those beams to safely and adequately support the self-weight of the forms, concrete, and construction load specified in Section 400 of the ***Specifications***.

   For Florida-I Beams, the Standard top flange reinforcing allows for a beam spacing up to 14 feet with an 8½" deck.
9. The design thickness of the composite deck must be provided from the top of the stay-in-place metal form to the finished deck surface, and the superstructure concrete quantity will not include the concrete required to fill the form flutes.

D. The maximum prestressing force ($\mathbf{P_u}$) from fully bonded strands at the ends of prestressed beams must be limited to the values shown in the ***Instructions for Design Standards (IDS)***. For non-standard single web prestressed beam designs, modify the requirements of ***LRFD*** [5.10.10.1] to provide vertical reinforcement in the ends of pretensioned beams with the following splitting resistance:

- 3% $\mathbf{P_u}$ from the end of the beam to h/8, but not less than 10”;
- 5% $\mathbf{P_u}$ from the end of the beam to h/4, but not less than 10”;
- 6% $\mathbf{P_u}$ from the end of the beam to 3h/8, but not less than 10”.

Do not apply losses to the calculated prestressing force ($P_u$). The minimum length of debonding from the ends of the beams is half the depth of the beam. Do not modify the reinforcing in the ends of the beams shown in the Standard Drawings without the approval of the State Structures Design Engineer.

*Commentary: The maximum splitting force from bonded prestressing strands has been increased in order to minimize horizontal and diagonal web cracking, and also to compensate for the longer splitting force distribution length (h/4) adopted by LRFD in 2002. An additional splitting zone from h/4 to 3h/8 has been added to control the length of potential cracks, consistent with previous standard FDOT designs.*

E. Provide embedded bearing plates in all prestressed I-Girder beams deeper than 60-inches. Provide embedded bearing plates for all Florida-I beams. Include beveled bearing plates for all I-beam and U-beam designs where the beam grade exceeds 2%.

*Commentary: Bearing plates add strength to the ends of the concrete beams to resist the temporary loadings created in the bearing area by the release of prestressing forces and subsequent camber and elastic shortening.*

F. Standard prestressed beam properties are included in the ***Instructions for Design Standards (IDS)***.

G. For pretensioned simple span AASHTO Type II and Florida-I Beam bridges, eliminating the permanent end diaphragms is the preferred option except as noted in Paragraph I below and ***SDG*** 4.7. However, in cases where there are significant lateral loads, partial depth, permanent end diaphragms may be used. See ***SDM*** Chapter 15 for partial depth diaphragm details. For spans requiring end diaphragms, determine if diaphragms are necessary for every bay.

*Commentary: For spliced post-tensioned girder bridges, diaphragms at the splice and anchorage locations are required.*

| Modification for Non-Conventional Projects: |
|---|
| Delete ***SDG*** 4.3.1.G and associated Commentary. |

H. Analyze spans subject to significant lateral loads to determine if diaphragms are needed.

*Commentary: When investigating the effect of significant lateral loads such as vessel collision or wave loads, check the stresses at the interface of the beam top flange and the beam web, from each end of the beam to a longitudinal distance approximately equivalent to the beam height.*

I. Provide full depth end diaphragms where the beams or girders are not parallel, or approximately parallel, to the direction of traffic on the bridge, e.g. bridges used in conjunction with braided ramps.

### 4.3.2 Beam Camber/Build-Up over Beams

A. Unless otherwise required as a design parameter, beam camber for computing the build-up shown on the plans must be based on 120-day old beam concrete.

| Modification for Non-Conventional Projects: |
|---|
| Delete ***SDG*** 4.3.2.A. |

B. On the build-up detail, show the age of beam concrete used for camber calculations as well as the value of camber due to prestressing minus the dead load deflection of the beam.

C. Consider the effects of horizontal curvature with bridge deck cross slope when determining the minimum buildup over the tip of the inside flange.

*Commentary: In the past, the FDOT has experienced significant deck construction problems associated with excessive prestressed, pretensioned beam camber. The use of straight strand beam designs, higher strength materials permitting longer spans, stage construction, long storage periods, improperly placed dunnage, and construction delays are some of the factors that have contributed to camber growth. Actual camber at the time of casting the deck equal to 2 to 3 times the initial camber at release is not uncommon.*

D. Design pretensioned beams so that the theoretical design camber at the end of construction is positive (upward) after all non-composite and composite dead loads are applied.

### 4.3.3 Minimum Web Thickness [5.14.1.2.2]

The minimum web thicknesses for prestressed beams are:

| | |
|---|---|
| AASHTO Type II, Florida-I and Florida-U Beams | per the ***Design Standards*** |
| Non-standard beams with single stirrups | 5½ inches |
| Non-standard beams with double stirrups | 6 inches |
| Post-Tensioned Beams | See ***SDG*** Table 4.5.1-1 |

### 4.3.4 I-Beam Stability (Rev. 01/17)

A. Analyze simple span prestressed concrete Florida-I Beams (FIBs) and AASHTO Type II Beams for stability for the following stages using the loads and limits shown below. Specify in the plans the bracing information listed under Plan Requirements for each stage.

1. Stage 1 - Crane release (beam sitting on bearings without end bracing)
   a. Loads: 30 mph construction active basic wind speed (***SDG*** 2.4.3)
   b. Beam Limits (For analysis methodology, see “Lateral Stability of Long Prestressed Concrete Beams - Part 2”, Mast, R., ***PCI Journal***, Vol. 38, No. 1, January-February 1993, pp. 70-88.):
      i. Factor of Safety Against Cracking ≥ 1.0.
      ii. Factor of Safety Against Rollover ≥ 1.5.
      iii. Factor of Safety Against Wind ($P_{max,0}$ / $P_{30mph}$) ≥ 2.0 using Equation 4-1.

$$P_{max,0} = 61e^{\frac{-L}{55}}\left(\frac{1}{3} + 15e^{\frac{-D}{79}}\right) - 34e^{\frac{-D}{72}} - \frac{1}{8} \qquad \text{[Eq. 4-1]}$$

Where:

$P_{max,0}$ = Wind pressure capacity of an unanchored prestressed beam (psf)

L = Span length (ft)

D = Beam depth (in)

$P_{30mph}$ = Service I wind pressure during Stage 1 (psf)

c. Plan Requirements: If any of the safety factors listed above are not satisfied, specify in the plans that the beam must be braced at its ends prior to crane release. If all requirements are satisfied, specify in the plans that the beam does not require bracing at its ends prior to crane release. See ***SDM*** 15.5 for plan content requirements.

2. Stage 2 - Braced Beams (no Deck Forms; with end bracing)

   a. Loads: 90 mph construction inactive basic wind speed (***SDG*** 2.4.3)

   b. Beam Limits: Factor of Safety Against Cracking ≥ 1.0.

   c. Plan Requirements:

      i. Total lines of bracing. See ***SDM*** 15.5 for plan content requirements.

      ii. Minimum number of adjacent beams erected and braced together.

      iii. ***LRFD*** Strength III horizontal load at brace locations for use by the Contractor's Engineer to determine the brace forces.

3. Stage 3 - Deck Casting

   a. Loads: 30 mph construction active basic wind speed (***SDG*** 2.4.3) and construction loads (***SDG*** 2.13).

   b. Beam Limits:

      i. Principal stresses at midspan ≤ ***LRFD*** Stress Limits after losses (***LRFD*** Table 5.9.4.2.1-1).

      ii. Deck overhang deflection at the coping line due to beam rotation ≤ ¼" (assume the deck overhang formwork is rigid).

   c. Plan Requirements:

      i. Total lines of bracing (must be ≥ Stage 2). See ***SDM*** 15.5 for plan content requirements.

      ii. ***LRFD*** Strength I overturning moment(s) at brace locations for use by the Contractor's Engineer to determine the brace forces.

B. The following are minimum bracing requirements for ***Design Standards*** Index 20000 Series Florida-I Beams and AASHTO Type II Beams:

1. Stage 1 - All beams 160 feet in length and greater shall be braced at their ends prior to crane release.

2. Stage 2 - In addition to end bracing, intermediate bracing shall be provided as follows:

   a. AASHTO Type II, FIB 63 and FIB 72 - mid-span bracing

   b. FIB 78 - quarter point bracing

   c. FIB 84 and 96 - quarter point bracing and 3 beams erected and braced together within 24 hours.

3. Stage 3 - For beams with deck overhangs ≤ ½ beam spacing, intermediate bracing shall be provided as follows:
   a. For deck overhangs ≤ 3 feet, use Stage 2 bracing.
   b. For 3 feet < deck overhangs ≤ 3.75 feet, use the greater of Stage 2 bracing or mid-span bracing.
   c. For 3.75 feet < deck overhangs ≤ 4.5 feet, use quarter point bracing.
   d. For deck overhangs > 4.5 feet, develop project specific requirements.

Assumptions:

1. Simple span beams.
2. Field Measured Beam Camber ≤ 6 inches.
3. ***Design Standards*** Index 20510 Composite Elastomeric Bearing Pads oriented square with the ends of the beam.
4. Finishing machine weight ≤ 14 kips, construction active wind speed = 20mph, and construction loading per ***SDG*** 2.13.
5. Bracing and connections are securely connected to each beam (moment resisting bracing frame).
6. 8.5 inch thick deck

C. For I shapes other than FIBs and AASHTO Type II beams, and prestressed I-beams erected using temporary shoring and/or spliced together using post-tensioning, design and detail project specific temporary bracing using the applicable philosophy above and include additional bracing types and/or details in the plans.

D. See ***SDG*** 11.6 for the Contractor's bracing design requirements.

## 4.4 FLAT SLAB SUPERSTRUCTURES [5.14.4]

### 4.4.1 General (Rev. 01/17)

A. Design those portions of flat slab superstructures that support traffic railings in accordance with ***SDG*** 4.2.5 with the following exceptions:
   1. The transverse moment due to the traffic railing dead load may be neglected.
   2. Provide the following minimum areas of transverse top slab reinforcing for use with traffic railings located adjacent to coping lines:
      a. For TL-4 traffic railings: 0.30 sq in/ft within 4 feet of the gutter line
      b. For TL-5 traffic railings: 0.40 sq in/ft within 10 feet of the gutter line

B. Provide a ½" deep continuous V-groove adjacent to copings as shown in Figure 4.2.12-1.

C. Provide a minimum 8" cover from the top of the slab to the top of post-tensioning ducts used for unbonded tendons.

D. Provide a minimum 8" cover from the top of the slab to the top of voids in a voided slab.

### 4.4.2 C.I.P. Flat Slab Superstructures

A. For simple and continuous span C.I.P. flat slab superstructures, develop deflection diagrams indicating the deflection of the spans due to self weight of the slab, railings, raised sidewalks, etc.

B. For simple span C.I.P. flat slab superstructures, design and detail a casting sequence with construction joints located as required.

C. For continuous C.I.P. flat slab superstructures, design and detail a casting sequence with construction joints at one-quarter and/or three-quarter points in the spans as required to minimize cracking in the negative moment regions.

D. Include the following plan notes for all C.I.P. flat slab superstructures:

The slab casting sequence may not be changed unless the Contractor's Specialty Engineer performs a new structural analysis and new deflection diagrams and revised slab reinforcing steel layouts and bar lists are developed.

A minimum of 72 hours is required between successive pours in a given unit.

*Commentary: For C.I.P. flat slab superstructures, the Contractor is responsible for determining the deflection of the formwork due to the weight of the wet slab concrete, screed and other construction loads in conjunction with the casting sequence shown in the plans.*

### 4.4.3 Precast Flat Slab Superstructures (Rev. 01/17)

A. Design pretensioned slab beams and units so that the theoretical design camber at the end of construction is a minimum ¼" positive (upward) after all non-composite and composite dead loads are applied. Unless otherwise required as a design parameter, base beam or unit camber that is used for designing and detailing and that is to be shown on the plans on 120-day-old beam or unit concrete. The design camber shown on the plans is the value of camber due to prestressing minus the dead load deflection after all prestress losses.

| Modification for Non-Conventional Projects: |
|---|
| Delete ***SDG*** 4.4.3.A and insert the following:<br>A. Design pretensioned slab beams and units so that the theoretical design camber at the end of construction is a minimum ¼" positive (upward) after all non-composite and composite dead loads are applied. The design camber shown on the plans is the value of camber due to prestressing minus the dead load deflection after all prestress losses. |

B. Design precast flat slab superstructures with transverse post-tensioning to meet the following requirements:

1. Design precast flat slab superstructures using prestressed slab beams that are transversely post-tensioned together using keyways between adjacent beams that are filled with non-shrink grout.

2. Incorporate a double duct system for the post-tensioning in the prestressed slab beams. The outer duct must be cast into the slab beam and sized to accommodate a differential camber of 1-inch between adjacent beams. The inner duct must be continuous across all joints and sized based upon the number of strands for strand tendons or the diameter of the bar coupler for bar tendons. Specify that both the inner duct and the annulus between the ducts be grouted.
3. Address camber over the length of the span, differential camber between adjacent slab beams and ride smoothness required per ***Specifications*** Section 400 by using one of the following techniques:
   a. Use a reinforced composite C.I.P. concrete topping.
   b. Provide additional concrete cover on the tops of the slab beams that will be planed off.

C. Design precast flat slab superstructures that are not transversely post-tensioned using slab beams that are connected using a reinforced composite C.I.P. concrete topping and a reinforced C.I.P. concrete keyway or pocket between adjacent beams. The keyway or pocket must be integral with, and cast in conjunction with, the reinforced composite C.I.P. concrete topping.

## 4.5 POST-TENSIONING, GENERAL [5.14.2]

A. This section applies to all post-tensioned superstructure components.

B. See ***SDG*** 1.11 for additional requirements.

### 4.5.1 Minimum Dimensions (Rev. 01/17)

Design and detail post-tensioned superstructure elements to meet or exceed the minimum dimensions in accordance with Table 4.5.1-1.

**Table 4.5.1-1 Minimum Dimensions for Superstructure Elements Containing Post-Tensioning Tendons**

| Post-Tensioned Superstructure Element | Minimum Dimension |
|---|---|
| Webs of I-Girder and U-Girder Bridges | 8 inches thick, or outer duct diameter plus 2 x cover[1] plus 2 x stirrup dimension (deformed bar diameter), or as required by design; whichever is greater. |
| End Blocks of I-Girder Bridges | Length (including transition) not less than 1.5 x depth of girder |
| Regions of Slabs without longitudinal tendons | 8 inches thick, or as required to accommodate planing, concrete covers, transverse and adjacent longitudinal PT ducts and top and bottom mild reinforcing mats, with allowances for construction tolerances whichever is greater. |
| Regions of slabs containing longitudinal internal tendons | 9 inches thick, or as required to accommodate planing, concrete covers, transverse and longitudinal PT ducts and top and bottom mild reinforcing mats, with allowances for construction tolerances whichever is greater. |
| Clear Distance Between Circular Voids in C.I.P. Voided Slab Bridges | Outer duct diameter plus 2 x cover plus 2 x stirrup dimension (deformed bar diameter); or outer duct diameter plus vertical reinforcing plus concrete cover; whichever is greater. |
| Segment Pier Diaphragms containing external post-tensioning | 4 feet thick.[2] |
| Webs of C.I.P. Boxes with internal tendons | For single column of ducts: 12 inches thick.<br>For two or more ducts set side by side: Web thickness must be sufficient to accommodate concrete covers, longitudinal PT ducts, required horizontal clearance between ducts, reinforcing (deformed bar diameters), and allowances for construction tolerances. |
| Deviator for external tendons | 4 feet thick (including Diabolos). |

1. 1 inch cover minimum at top of web where a deck will be cast over the beam.
2. Post-Tensioned pier segment halves are acceptable. See also ***SDG*** 1.11.4 for duct geometry requirements that may also affect diaphragm thickness.

### 4.5.2 Minimum Number of Tendons (Rev. 01/17)

Design and detail post-tensioned superstructure elements to meet or exceed the minimum number of tendons in accordance with Table 4.5.2-1.

**Table 4.5.2-1 Minimum Number of Tendons Required for Post-Tensioned Superstructure Elements**

| Post-Tensioned Superstructure Element | Minimum Number of Tendons |
|---|---|
| Balanced Cantilever Segmental Bridges | Two positive moment external draped continuity tendons per web that extend to adjacent pier diaphragms |
| Mid Span Closure Pour of C.I.P. and Precast Balanced Cantilever Segmental Bridges | Bottom slab – two tendons per web<br>Top slab – See ***SDG*** 4.6.3.B for tendon number, size and anchorage requirements per cell |
| Span by Span Segmental Bridges | Four tendons per web |
| C.I.P. Multi-Cell Bridges and Post-Tensioned U-Girder Bridges[1] | Three tendons per web |
| Post-Tensioned I-Girder Bridges[2] | Three tendons per girder |
| Unit End Spans of C.I.P. and Precast Balanced Cantilever Segmental Bridges | Three tendons per web |
| Integral Pier Caps (Hammerhead, Straddle, etc.) | See ***SDG*** Table 3.11.1-1 |
| Diaphragms - Vertically Post-Tensioned | Six tendons if strength is provided by PT only;<br>Four tendons; if strength is provided by combination of PT and mild reinforcing |
| Diaphragms - Vertically Post-Tensioned | Four Bars per face, per cell |
| Segment - Vertically Post-Tensioned | Two Bars per web |

1. Two U-Girders minimum per span.
2. Three I-Girders minimum per span.

### 4.5.3 Duct Spacing (Rev. 01/17)

Design and detail post-tensioned superstructure elements to meet or exceed the minimum center-to-center duct spacings in accordance with Table 4.5.3-1 using duct diameters shown in ***SDG*** Table 1.11.4-1.

**Table 4.5.3-1 Minimum Center-to-Center Duct Spacing**

| Post-Tensioned Superstructure Type | Minimum Center To Center Vertical Spacing "d" between Longitudinal Ducts[1] | Minimum Center To Center Horizontal Spacing "s" between Longitudinal Ducts[1] |
|---|---|---|
| Precast Balanced Cantilever Segmental Bridges (see ***SDG*** Figure 4.5.3-1) | 2 times outer duct diameter plus 1-inch, or outer segmental coupler diameter plus 2-inches, whichever is greater. | 2 times outer duct diameter plus 1-inch, or outer segmental coupler diameter plus 2-inches, whichever is greater. |
| C.I.P. Balanced Cantilever Segmental Bridges (see ***SDG*** Figure 4.5.3-1) | Outer duct diameter plus 1.5 times maximum aggregate size, or outer duct diameter plus 2-inches, whichever is greater. | Outer duct diameter plus 2½-inches. |
| Post-Tensioned I-Girder and U-Girder Bridges[2] (see ***SDG*** Figure 4.5.3-2) | Outer duct diameter plus 1.5 times maximum aggregate size, or outer duct diameter plus 2-inches, whichever is greater (measured along the slope of webs or flanges). | Outer duct diameter plus 2½-inches. |
| C.I.P. Solid or Voided Slab Bridges and C.I.P. Multi-Cell Bridges (see ***SDG*** Figure 4.5.3-3) | Outer duct diameter plus 1.5 times maximum aggregate size, or outer duct diameter plus 2-inches, whichever is greater. | Outer duct diameter plus 3-inches. |
| Integral Pier Caps (See ***SDG*** Figure 3.11.1-1) | See ***SDG*** Table 3.11.1-2 | See ***SDG*** Table 3.11.1-2 |

1. Bundled ducts are not allowed.
2. Detail draped tendons in post-tensioned I-Girders and U-Girders utilizing round ducts only.

## Figure 4.5.3-1 Section Through Segmental Box Girder Showing Duct Spacings

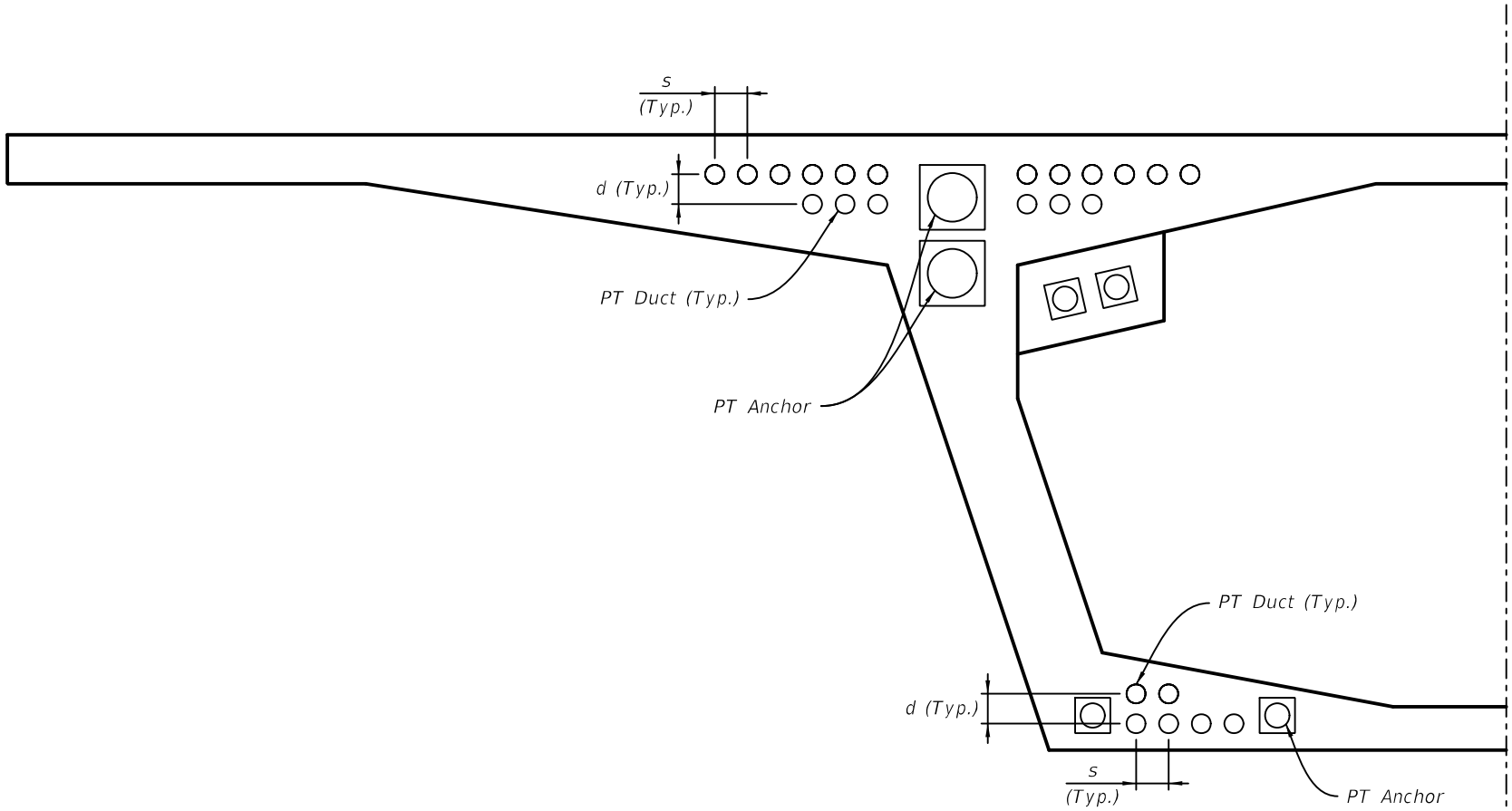

## Figure 4.5.3-2 Section Through Post-Tensioned I-Girder Showing Duct Spacings

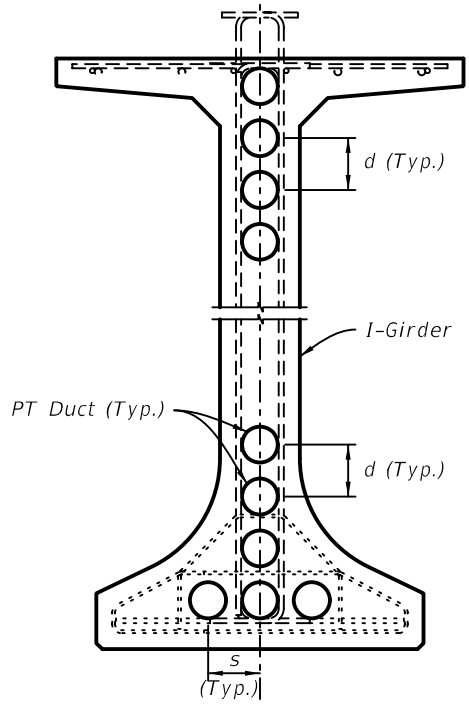


I-GIRDER SHOWN; U-GIRDER SIMILAR

## Figure 4.5.3-3 Section Through Slab or Multi-Cell Box Girder Bridge Showing Duct Spacings

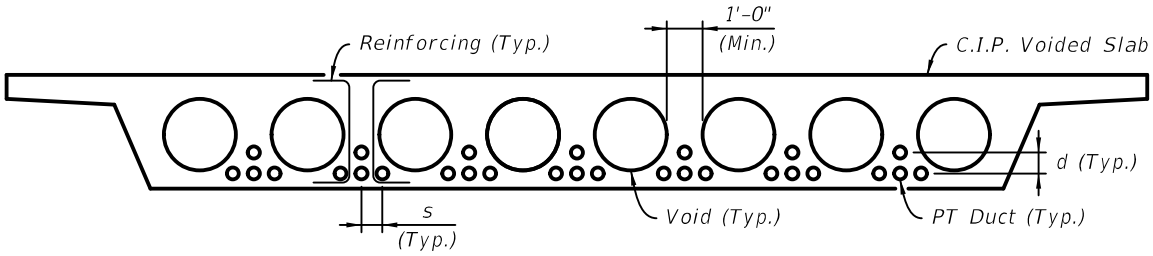


VOIDED SLAB BRIDGE SHOWN; SOLID SLAB AND C.I.P. MULTI-CELL BRIDGES SIMILAR

### 4.5.4 Principal Tensile Stresses [5.8.5] [5.9.4.2.2] [5.14.2.3.3]

The design of I-girder, U-girder and segmental box girder bridges without the use of vertical post-tensioning in the webs is preferred. High principal stresses shall first be reduced by either extending the section depth and/or thickening the web. When vertical post-tensioning is required, limit its use to the lesser of (1) the first two segments from the pier segment/table or (2) ten percent of the span length.

*Commentary: Occasionally in C.I.P. balanced cantilever segmental box girder construction, vertical PT bars supplying a nominal vertical compression are used at select locations to control web cracking.*

### 4.5.5 Expansion Joints

Design and detail expansion joints to be set at time of construction for the following conditions:

A. Allowance for opening movements based on the total anticipated movement resulting from the combined effects of creep, shrinkage, and temperature rise and fall. For box girder structures, compute creep and shrinkage from the time the expansion joints are installed through day 4,000.

B. To account for the larger amount of opening movement, expansion devices shall be set precompressed to the maximum extent possible. In calculations, allow for an assumed setting temperature of 85 degrees F. Provide a table in the plans giving precompression settings according to the prevailing conditions. Size expansion devices and set to remain in compression through the full range of design temperature from their initial installation until a time of 4,000 days.

C. Provide a table of setting adjustments to account for temperature variation at installation in the plans. Indicate the ambient air temperature at time of installation, and note that adjustments must be calculated for the difference between the ambient air temperature and the mean temperature given in ***SDG*** 2.7.

## 4.6 SEGMENTAL BOX GIRDERS

A. Segmental bridges are inherently complex to design and build. They require a coordinated effort between designers and detailers in order to develop integrated plans that address all design, detailing and constructability issues. The information contained herein is only part of the requirements necessary to successfully accomplish this task. For additional requirements see ***SDM*** Chapter 20.

B. Provide continuous typical longitudinal mild reinforcing through all segment joints for cast-in-place segmental construction.

C. Provide a ½" deep continuous V-groove adjacent to copings as shown in Figure 4.2.12-1.

D. See ***SDG*** 1.11 and ***SDG*** 4.5 for additional requirements.

### 4.6.1 Maximum Web Spacing for Precast Segmental Box Girders

The maximum web spacing for single and multiple cell precast segmental box girders is 32'-0" as shown in Figure 4.6.1-1. See ***SDG*** 4.5 for post-tensioning requirements.

**Figure 4.6.1-1 Maximum Web Spacing for Precast Box Girders**

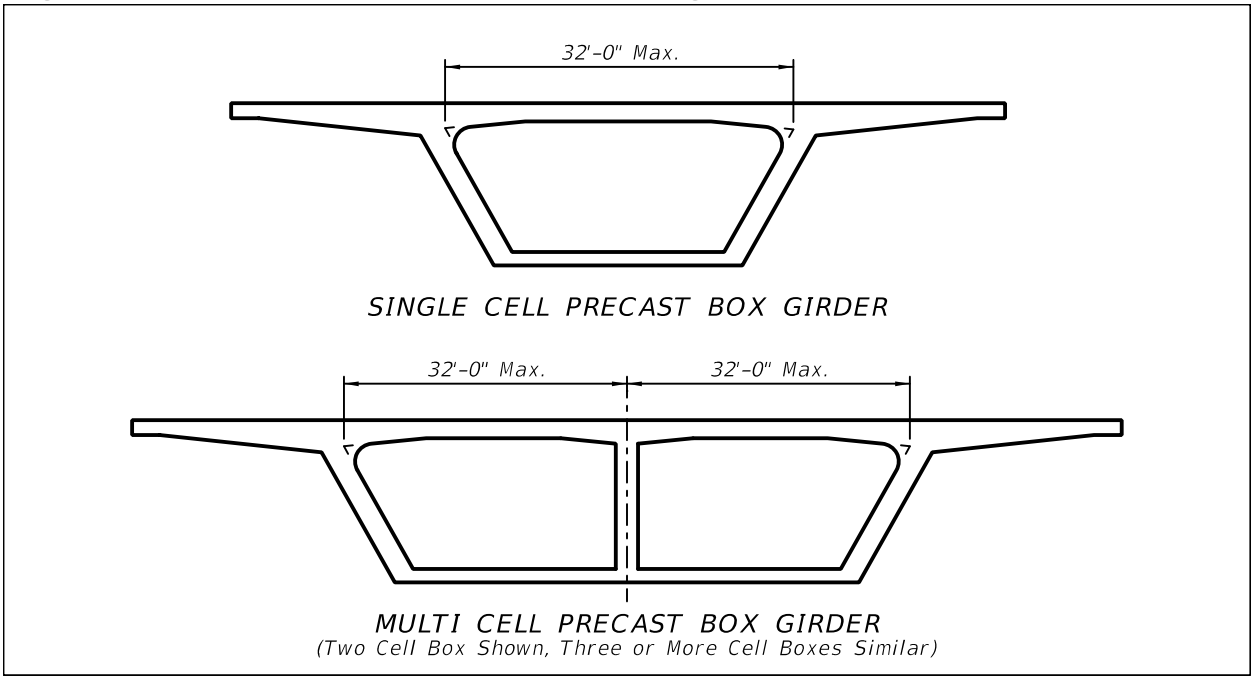


### 4.6.2 Access and Maintenance (Rev. 01/17)

During preliminary engineering and when determining structure configuration give utmost consideration to accessibility and to the safety of bridge inspectors and maintenance. Precast, pretensioned (non-post-tensioned) Florida-U-Beams are exempt from special requirements for inspection and access.

A. Height: [2.5.2.2]

   For maintenance and inspection, the minimum interior, clear height of box girders is 6 feet.

B. Electrical:

   1. Design and detail interior lighting and electrical outlets in accordance with ***Design Standards*** Index 21240.
   2. Show interior lighting and electrical outlets at the following locations:
      a. all ingress/egress access openings
      b. both sides of diaphragms where girder is continuous
      c. at the inside face of diaphragms where the girder is discontinuous, e.g. at end bents and expansion joints.

d. spaced between the above locations at approximately equal intervals not to exceed 50 feet.

Only a single interior light and electrical outlet are required if any of the above locations coincide.

3. Where interior height permits, show lighting mounted along center of box.
4. Locate switches at each end of each span and at every access opening.

C. Access:

1. Access Openings in Bottom Flanges
   a. Design box sections with ingress/egress access openings in the bottom flanges located at maximum 600 feet spacing. Space access openings along the length of the box girder such that the distance from any location within the box girder to the nearest opening is 300 feet or less. Provide a minimum of two access openings per box girder line. Whenever feasible and in areas not deemed problematic for access by unauthorized persons or due to bridge security issues, place an access opening near each abutment. Provide additional access openings along the length of the box girder as required to meet the maximum spacing requirement. Avoid placing access openings over traffic lanes, the use of which would require extensive maintenance of traffic operations and at other locations such as over sloped embankment, over water or locations which would otherwise negatively affect the safety of inspectors or the traveling public. Contact the District Maintenance Office for final guidance in establishing access opening locations.
   b. The minimum access opening size is 32 inches x 42 inches, or 36 inch diameter. Indicate on the plans that access openings are to remain clear and are not to be used for utilities, drain pipes, conduits or other attachments. If these items are required, provide additional openings.
   c. Analyze access opening sizes and bottom flange locations for structural effects on the box girder. Generally, do not place access openings in zones where the bottom flange is in compression under permanent loads.
   d. Specify an Access Hatch Assembly in accordance with ***Design Standards*** Index 21251 to be provided at each 36 inch diameter access opening. If other size access openings are used or if this Design Standard cannot otherwise be used, develop custom project specific designs based on the standard using inswinging, hinged, solid steel access hatches with steel hardware and a lockable hasp on the outside of the hatch. Require suitable keyed commercial grade, weather resistant padlocks with a 2 inch shackle for all access hatches. Require that all padlocks on an individual bridge be keyed alike.
2. Access Openings in Interior Diaphragms
   a. Provide an access opening with a flat bottom through all interior diaphragms. If the bottom of the diaphragm access opening is not flush with the top of the bottom slab, provide concrete ramps to facilitate equipment movement.

b. The minimum diaphragm access opening size is 32 inches wide x 42 inches tall. Indicate on the plans that diaphragm access openings are to remain clear and are not to be used for utilities, drain pipes, conduits or other attachments. If these items are required, provide additional areas or openings. In all other areas of the box, provide a minimum continuous maintenance/inspection access envelope 6'-0" high x 2'-6" wide along the length of the box. The 6'-0" height dimension of the envelope, to be measured from top of the bottom slab of the box, shall clear all tendon ducts, anchorages, blisters, deviation saddles, etc.

c. Specify Access Door Assemblies at both ends of simple span box girders and at both ends of continuous box girder units. Specify inswinging, hinged steel access doors with steel expanded metal mesh and steel hardware. Expanded metal mesh shall be ½" No. 16 expanded carbon steel metal mesh in accordance with ASTM F 1267, Type I or II, Class 2, Grade A. Equip access doors with a lockable latch that can be opened from both sides of the door. Require suitable keyed commercial grade, weather resistant padlocks with a 2 inch shackle for access doors at abutments. Require that all padlocks on an individual bridge be keyed alike.

*Commentary: The size of the openings in the expanded metal mesh was specifically selected to exclude the Brazilian Free-tailed Bat, Tadarida brasiliensis, but the small mesh size will also exclude other species of bats found in Florida and most, if not all, birds.*

D. Other Exterior Openings:

1. Design each box girder with minimum 2-inch diameter ventilation or drain holes located in the bottom flange on both sides of the box spaced at approximately 50 feet or as needed to provide proper drainage. Place additional drains at all low points against internal barriers. Locate drains to accommodate bridge grade.

2. Provide drains to prevent water (including condensation) from ponding near post-tensioning components, face of diaphragms, blisters, ribs, deviators and other obstructions. Show details on Contract Drawings. Include the following:

   a. Specify a 2-inch diameter permanent plastic pipe (PVC with UV inhibitor) set flush with the top of the bottom slab.

   b. A ½" deep continuous V-groove around bottom of pipe insert.

   c. Drains at all low points against internal barriers, blisters, etc.

   d. Drains on both sides of box, regardless of cross slope (to avoid confusion.)

   e. Vermin guards for all drains and holes.

   f. A note stating, "Install similar drains at all low spots made by barriers introduced to accommodate means and methods of construction, including additional blocks or blisters."

3. Require 0.25-inch screen on all exterior openings not covered by a door. This includes holes in webs through which drain pipes pass, ventilation holes, drain holes, etc.
4. Design flexible barriers to seal openings between expansion joint segments of adjacent end units to prevent birds from roosting on the box end ledges. Barriers shall be UV and weather resistant and easily replaceable.

E. Other Box Sections - Provide accessibility to box sections, such as precast hollow pier segments, in a manner similar to that for box girders, particularly concerning the safety of bridge inspectors and maintenance personnel. During preliminary engineering and when determining structure configuration, give utmost consideration to box girder accessibility and the safety of bridge inspectors and maintenance personnel. Due to the wide variety of shapes and sizes of hollow sections such as precast concrete pier segments, numerous site constraints and environmental conditions, each application will be considered on an individual, project-by-project basis. In all cases, contact the SDO for guidance in designing adequate inspection access and safety measures.

### 4.6.3 Tendons (Rev. 01/17)

A. Lay out cantilever internal tendons in precast segmental box girder superstructures as shown in Figure 4.6.3-1. Combinations of one anchorage and two anchorages per web may be used. See also ***SDG*** 1.11 for additional requirements.

B. Provide external top slab continuity tendons across mid span closure pours in balanced cantilever bridges as follows.

1. For boxes with wing lengths less than or equal to 0.6 x W (see Figure 4.6.3-3), provide external top slab continuity tendons across mid span closure pours as shown in Table 4.6.3-1.
2. For boxes with wing lengths greater than 0.6 x W (see Figure 4.6.3-3), use the following methodology to determine top slab continuity tendon configurations:
   a. Determine lateral distribution of tendon force across the top slab using ***LRFD*** [C4.6.2.6.2] (the ***LRFD*** 30-degree model).
   b. Locate external top slab continuity tendon anchorages sufficient distances back from the closure pour to ensure full distribution of tendon forces across the closure pour and so that the tendons overlap a minimum of one pair of cantilever tendons. Do not anchor external top slab continuity tendons in the segments adjacent to the closure pour.
   c. Provide a minimum of 75 psi compression across the top slab assuming a uniform stress of P/A on the top slab area only (see Figure 4.6.3-3). Neglect the effects of the bottom slab continuity post-tensioning for this calculation.
   d. Locate external top slab continuity tendon anchorages adjacent to the webs as shown in Figure 4.6.3-3. Provide additional tendons evenly spaced across each cell and within the wings as required to provide the required uniform minimum compression.

## Figure 4.6.3-1 Internal Tendon Layout Schematics for Precast Segmental Box Girders

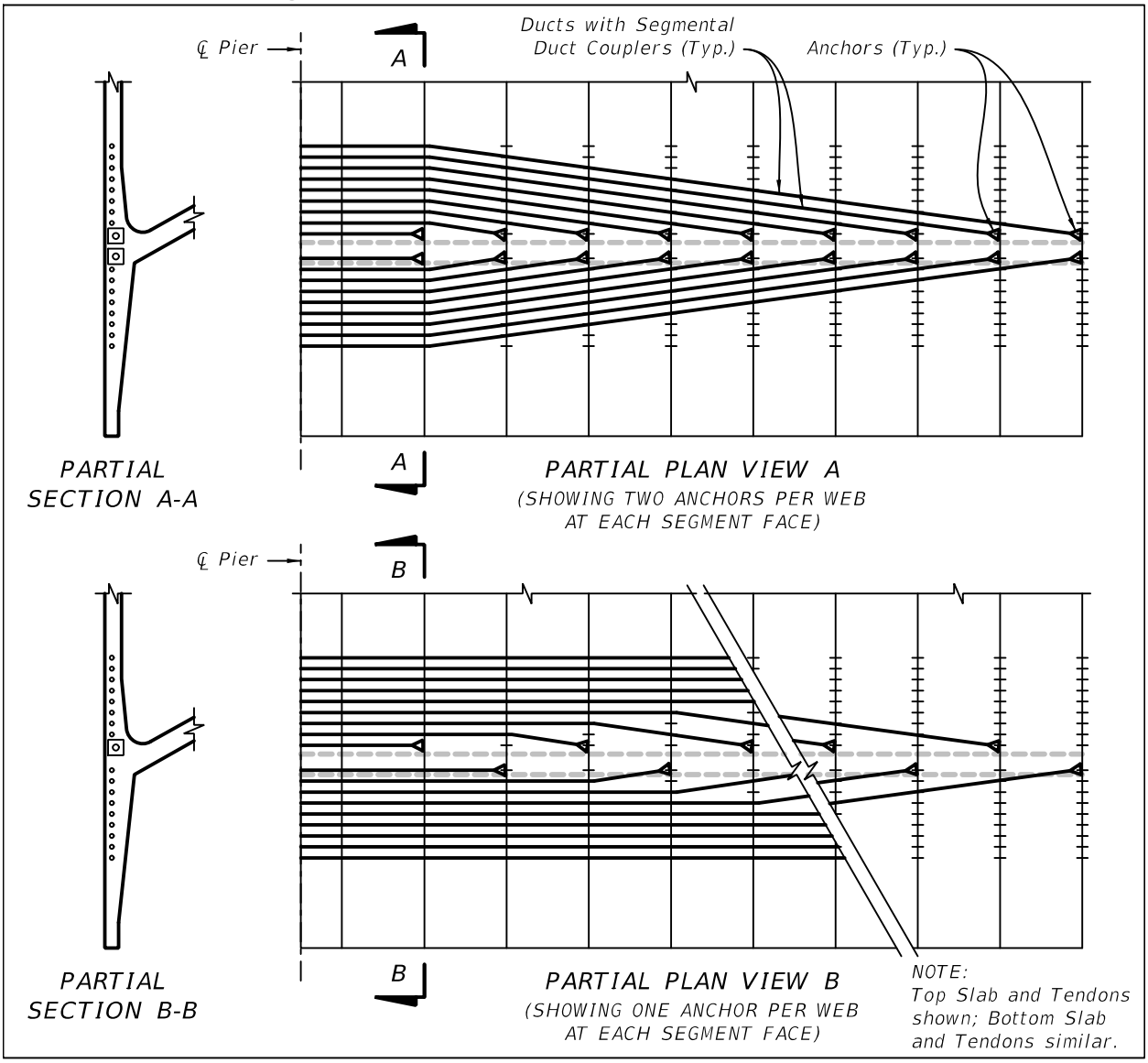

## Figure 4.6.3-2 Cantilever Tendon Layout Schematic for Cast-In-Place Box Girders

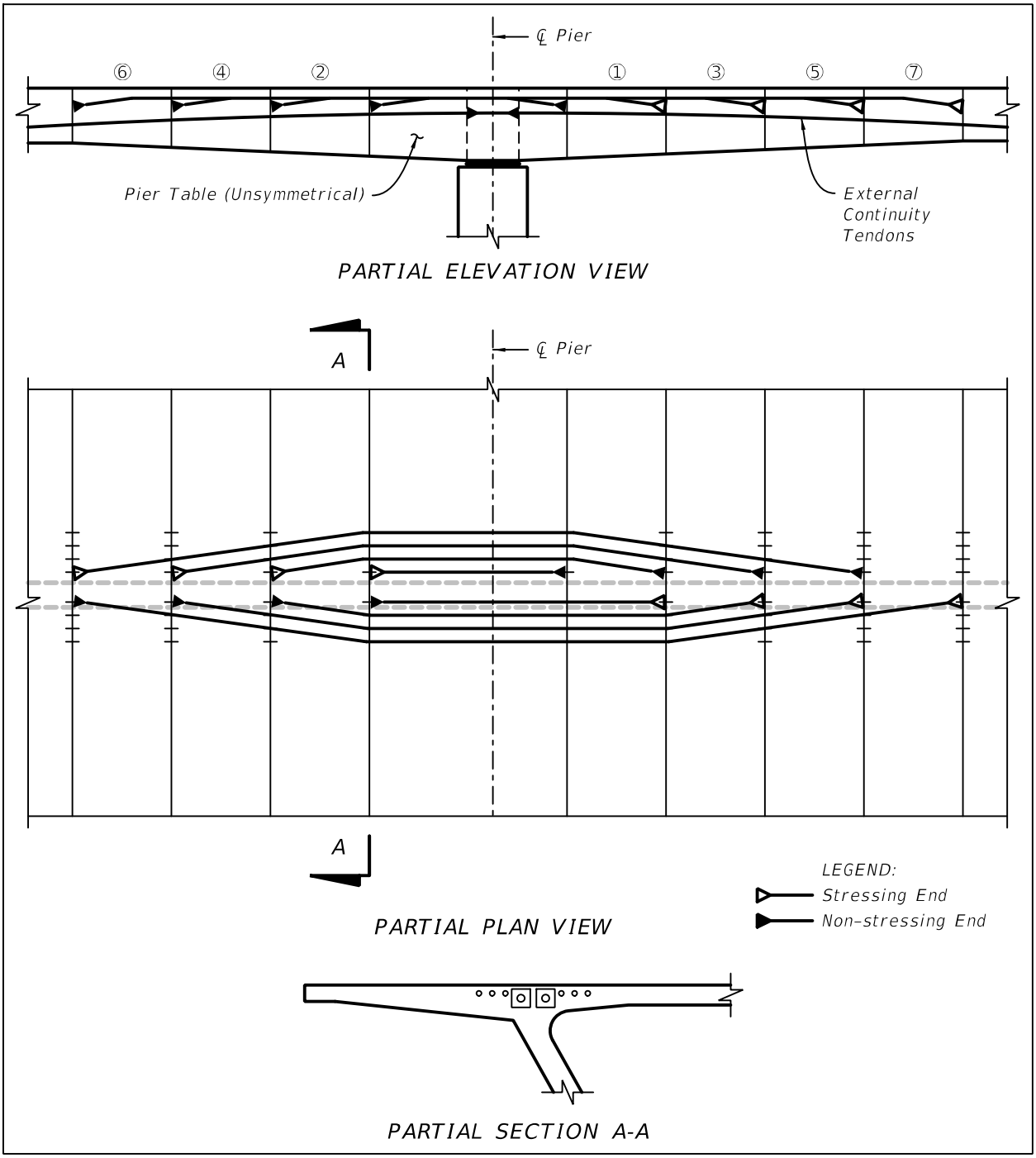

## Table 4.6.3-1 Minimum Number, Size and Anchorage Location of External Top Slab Tendons Across Mid Span Closure Pours

| Web Spacing per cell - See Figure 4.6.3-3 | Number and size of Tendons per cell[1] | Tendon Anchorage Locations referenced from adjacent face of Closure Pour[2] |
|---|---|---|
| W ≤ 12 ft | Two tendons - 4-0.6" diameter | One adjacent to each web anchored in 2nd Segment back |
| 12 ft < W ≤ 20 ft | Two tendons - 4-0.6" diameter | One adjacent to each web anchored in 3rd Segment back |
| 20 ft < W ≤ 25 ft | Two tendons - 7-0.6" diameter | One adjacent to each web anchored in 3rd Segment back |
| 25 ft < W ≤ 30 ft | Three tendons - 7-0.6" diameter | One adjacent to each web anchored in 2nd Segment back and one at middle of cell anchored in 3rd Segment back |
| W > 30 ft | Four tendons - 7-0.6" diameter | One adjacent to each web anchored in 3rd Segment back and two evenly spaced across cell anchored in 4th Segment back |

1. Alternate strand, parallel wire or PT bar tendon configurations which provide an equivalent force may be substituted for tendon configurations shown.
2. The resulting distance from tendon anchorage location to adjacent face of closure pour is the minimum. Locate top slab tendon anchorages longitudinally so that the tendons overlap a minimum of one pair of cantilever tendons.

## Figure 4.6.3-3 External Top Slab Continuity Tendon Layout versus Web Spacing at Mid Span Closure Pours

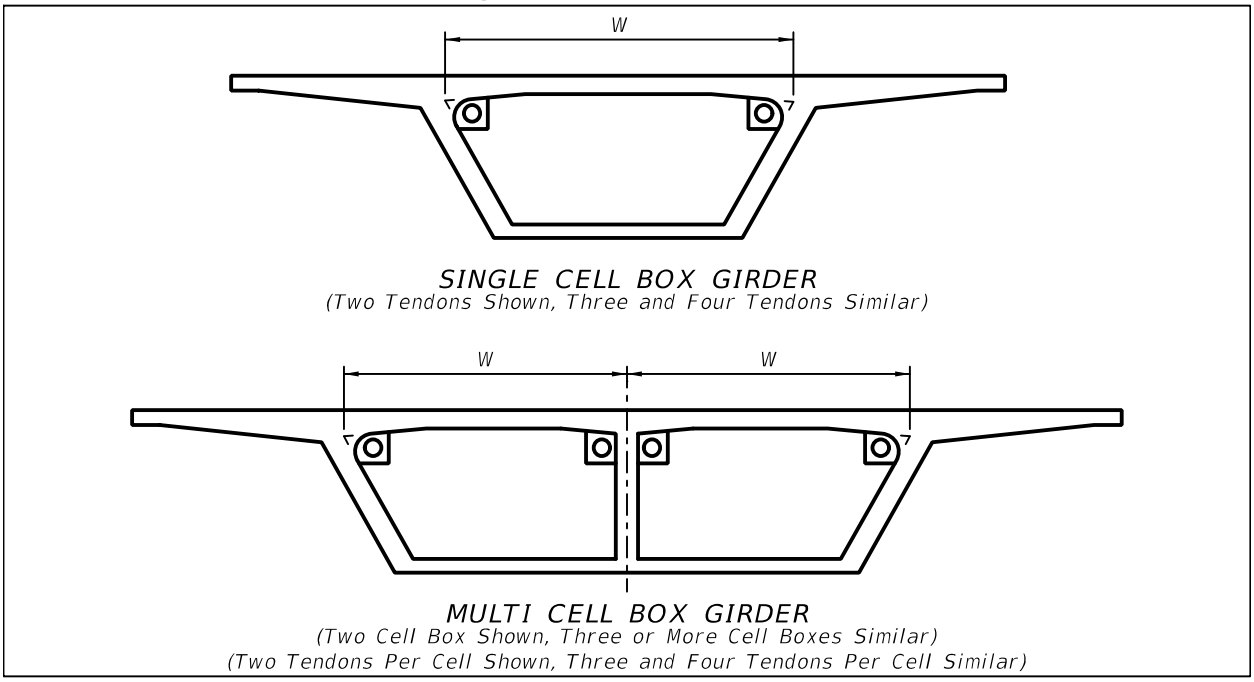

*Commentary: This is a minimum requirement and is not to be added to those required by the longitudinal analysis, i.e. if the number and size of top slab tendons across closure pours required by the longitudinal analysis exceeds these minimums, no additional tendons are required.*

C. Design and detail all future post-tensioning utilizing external tendons (strands, parallel wires or bars). Design and detail future post-tensioning so that any one span can be strengthened independently of adjacent spans. For each future tendon, provide one duct/anchorage location for expansion joint diaphragms and two duct/ anchorage locations for internal pier segment diaphragms.

### 4.6.4 Anchorage, Blister and Deviator Details (Rev. 01/17)

A. When anchorages for temporary or permanent tendons are required in the top or bottom slab of box girders, design and detail interior blisters, face anchorages or other SDO approved means. Block-outs that extend to either the interior or exterior surfaces of the slabs are not permitted.

B. Detail anchorage blisters so that tendons terminate no closer than 12-inches to a joint between segments.

C. Detail all interior blisters set back a minimum of 12-inches from the joint. Provide a ½" deep minimum V-groove around the top slab blisters to isolate the anchorage from any free water.

D. Transverse bottom slab ribs are not allowed. Design full height diaphragms directing the deviation forces directly into the web and slab.

**Figure 4.6.4-1 Deviator Diaphragm Detail**

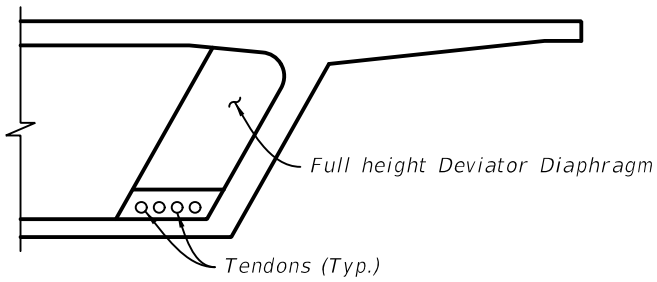


E. Raised corner recesses in the top corner of pier segments at closure joints are not allowed. Extend the typical cross section to the face of the diaphragm. Locate tendon anchorages to permit jack placement.

F. Design and detail clearance at anchorages for future inspection and replacement of unbonded tendons. See ***SDG*** 1.11.1.B for clearance requirements at anchorages.

## Figure 4.6.4-2 Inside Corner Detail at Pier Segments

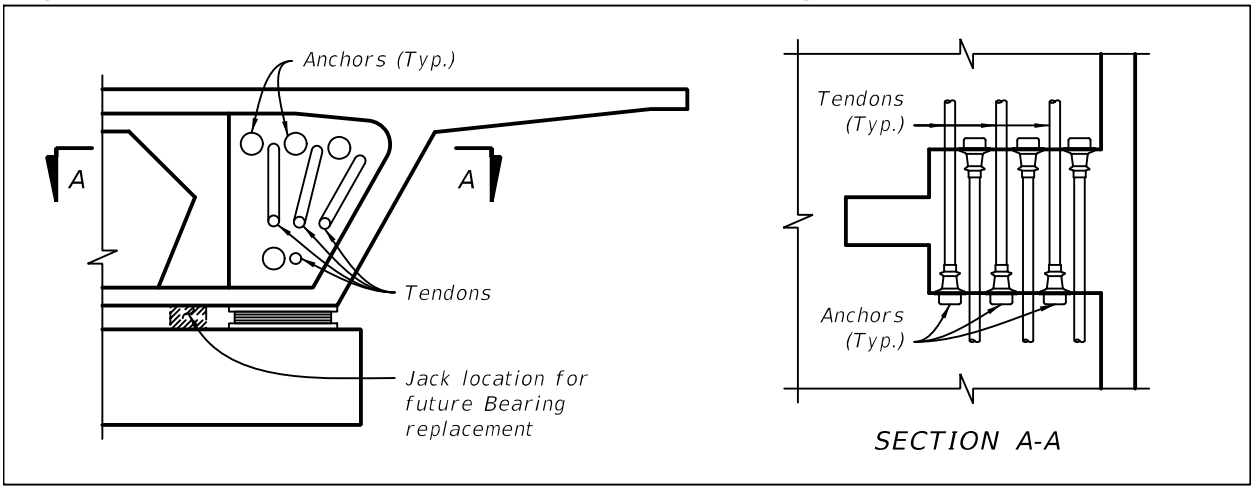


## 4.6.5 Design Requirements for Cantilever Bridges with Fixed Pier Tables

A. Design superstructures and substructures to accommodate erection tolerances of **L**/1000 (where **L** is the cantilever length from center of pier to the cantilever tip) for precast superstructures. Structure stresses shall be enveloped assuming a worst case condition ($\mathbf{L_A}$/1000 high on Cantilever A and $\mathbf{L_B}$ /1000 low on adjacent Cantilever B and vice-versa) assuming uncracked sections. Check the service limit state assuming these locked-in erection stresses, "**EL**" in ***LRFD*** [Equation 3.4.1-2].

## Figure 4.6.5-1 Elevation and Detail - Typical Cantilever Concrete Segmental Box with Fixed Pier Tables

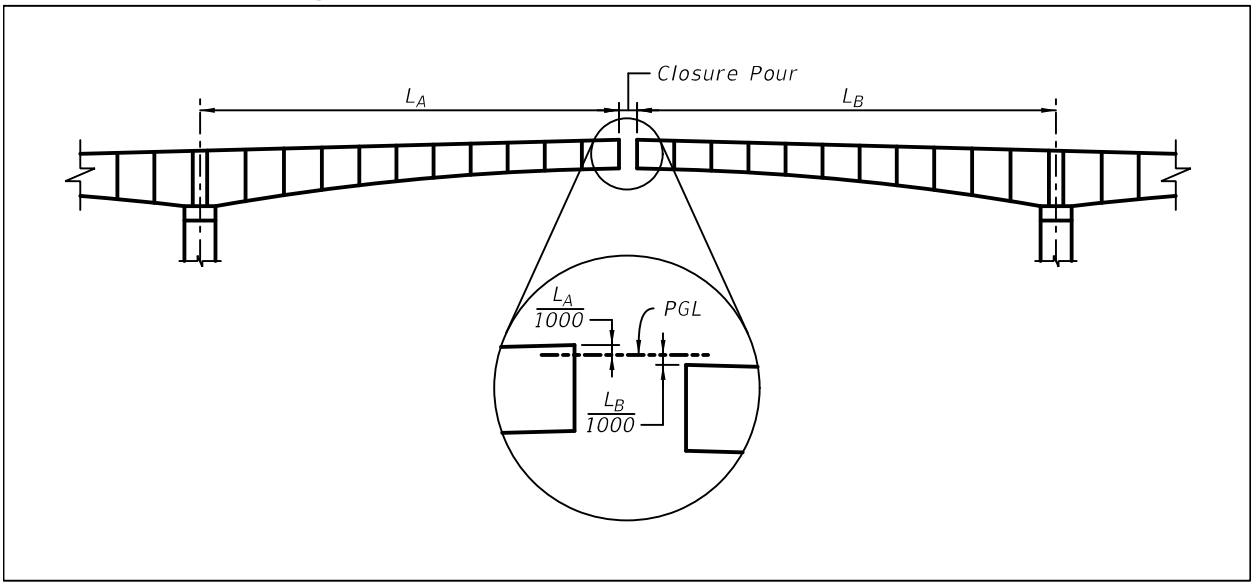


B. The service load stresses of the column and column-superstructure connection, including crack control of the column shall also be checked for both erection and final structure.

*Commentary: Field correction for geometry control for framed bridges built in precast balanced cantilever can result in high stresses in both the superstructure and substructure. These stresses need to be accommodated for by the designer. The **L**/1000 value is consistent with the allowable erection tolerance per FDOT **Specifications** Section 452. Cast-in-place construction with travelers is excluded, since geometry will be adjusted during cantilever erection.*

### 4.6.6 Creep and Shrinkage [5.14.2.3.6]

Calculate creep and shrinkage strains and effects using a Relative Humidity of 75%.

### 4.6.7 Expansion Joints (Rev. 01/17)

A. At expansion joints, provide a recess and continuous expansion joint device seat to receive the assembly, anchorage bolts, and frames of the expansion joint, i.e. a finger or modular type joint. In the past, block-outs have been made in such seats to provide access for stressing jacks to the upper longitudinal tendon anchorages set as high as possible in the anchorage block. Lower the upper tendon anchorages and re-arrange the anchorage layout as necessary to provide access for the stressing jacks.

B. At all expansion joints, protect anchorages from dripping water by means of skirts, baffles, V-grooves, or drip flanges. Ensure that drip flanges are of adequate size and shape to maintain structural integrity during form removal and erection.

## Figure 4.6.7-1 Details at Expansion Joints

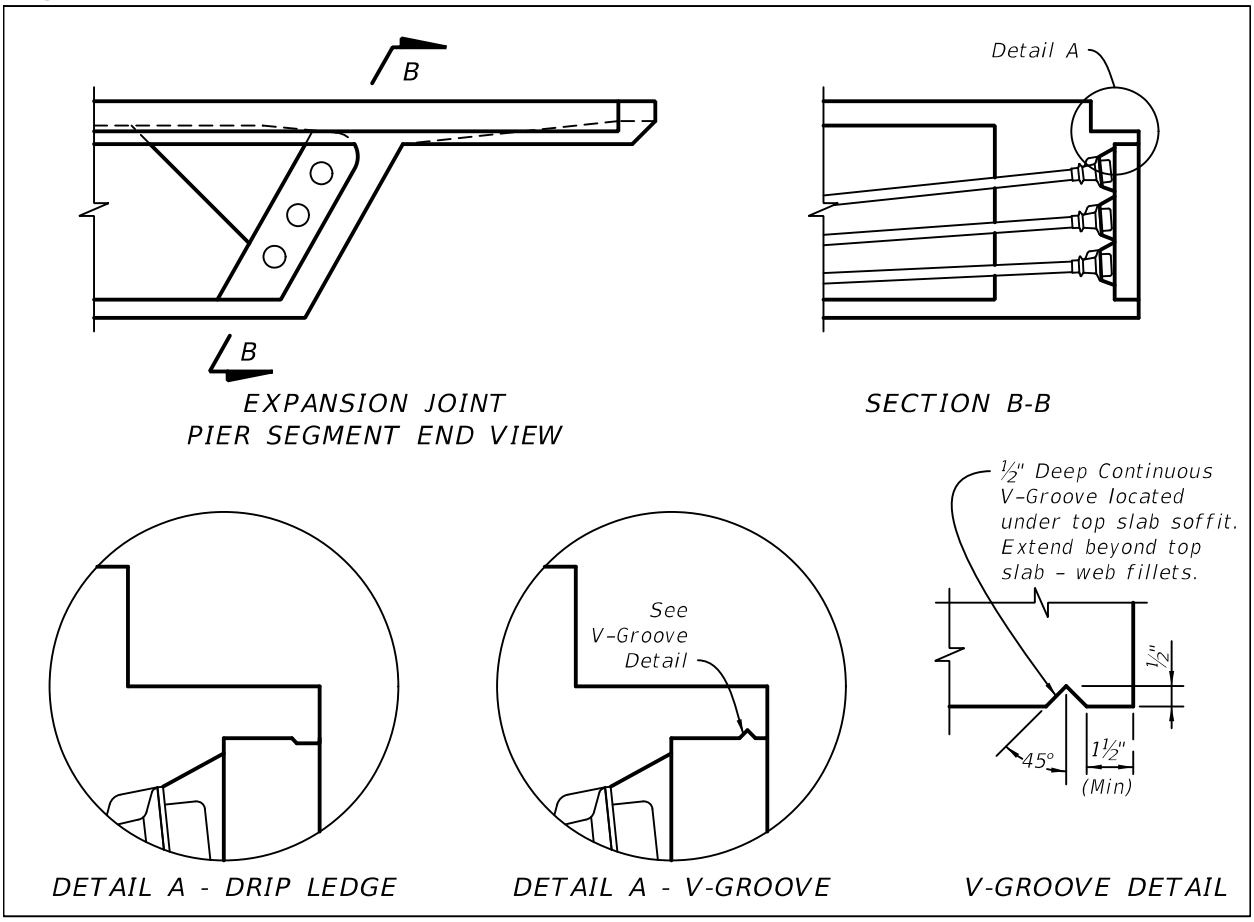


## 4.6.8 Construction Data Elevation and Camber Curve for Box Girders

A. General: Base Construction Data Elevations on the vertical and horizontal highway geometry. Calculate the Camber Curve based on the assumed erection loads used in the design and the assumed construction sequence.

B. Construction Data Elevations: Show construction data elevations in 3D space with "x", "y", and "z" coordinates. Locate the data points at the centerline of the box and over each web of the box.

C. Camber Curve: Provide Camber Curve data at the centerline of the box. Camber curve data is the opposite of deflections. Camber is the amount by which the concrete profile at the time of casting must differ from the theoretical geometric profile grade (generally a straight line) in order to compensate for all structural dead load, post-tensioning, long and short term time dependent deformations (creep and shrinkage), and effects of construction loads and sequence of erection. For segmental box girders, the Specialty Engineer shall provide the camber curves, and the EOR shall check them. For other bridge types, the EOR shall provide and check the camber curves.

*Commentary: Experience has shown more accurate casting curve geometry may be achieved by using the composite section properties with grouted tendons.*

## 4.6.9 Transverse Deck Loading, Analysis & Design

A. The loading for the transverse design of box girders shall be limited to axle loads without the corresponding lane loads. Axle loads shall be those that produce the maximum effect from either the HL-93 design truck or the design tandem axles (***LRFD*** [3.6.1.2.2] and [3.6.1.2.3], respectively). The Multiple Presence Factors (***LRFD*** [3.6.1.1.2]) shall also be included in the transverse design. The Tire Contact Area (***LRFD*** [3.6.1.2.5]) shall not be included in the transverse design of new bridges when using influence surface analysis methods to calculate fixed-end moments.

B. The prestressed concrete deck shall be designed for Strength I and Service I Load Combination excluding all wind effects. All analyses will be performed assuming no benefit from the stiffening effects of any traffic railing barrier.

C. In ***LRFD*** [5.7.3.4], use a Class 2 exposure condition for the transverse design of segmental concrete box girders for any loads applied prior to attaining full nominal concrete strength.

*Commentary: The Tire Contact Area (**LRFD** [3.6.1.2.5]) may be used when evaluating the transverse operating rating of existing prestressed concrete box girder decks.*

D. Design and detail all box girder top slabs to be transversely post-tensioned. Reduce critical eccentricities over the webs, and at or near the center of each cell within the box, from theoretical to account for the tendon profile within the duct and by an additional ¼-inch from theoretical to account for construction tolerances.

E. Design those portions of box girder top slabs supporting traffic railings using the values and applicable methodology shown in ***SDG*** 4.2.5.

## 4.6.10 Span-by-Span Segmental Diaphragm Details

A. Design external tendons so that the highest point of alignment is below the bottom mat of the top slab reinforcing in the diaphragm segment.

B. Design tendon filler ports and vents so that they do not pierce the top slab of a structural section.

## 4.6.11 Analytical Methods for the Load Rating of Post-tensioned Box Girder Bridges

Perform load rating in accordance with ***AASHTO MBE*** Section 6, Part A as modified by the Department's Bridge Load Rating Manual. For general references, see ***New Directions for Florida Post-Tensioning Bridges, Vol. 10 A "Load Rating Post-Tensioned Concrete Segmental Bridges"***. ***Volume 10A*** can be found on the Structures Design web site at the following address: www.fdot.gov/structures/posttensioning.shtm.

## 4.7 PRETENSIONED/POST-TENSIONED I-BEAMS (Rev. 01/17)

A. In the design of pretensioned beams made continuous by field-applied post-tensioning, the pretensioning applied to each beam field section shall be designed such that, as a minimum, the following conditions are satisfied:

1. The pretensioning shall meet the minimum steel provisions of ***LRFD*** [5.7.3.3.2].
2. The pretensioning shall be capable of resisting all loads applied prior to post-tensioning, including a superimposed dead load equal to 50% of the uniform weight of the beam, without exceeding the stress limitations for pretensioned concrete construction.
3. The pretensioning force shall be of such magnitude that the initial midspan camber of the beam field section at release, including the effect of the dead load of the beam, is at least ½". In computing the initial camber, the value of the modulus of elasticity shall be in accordance with ***SDG*** 1.4.1 for the minimum required strength of concrete at release of the pretensioning force, and the pretensioning force in the strands shall be reduced by losses due to elastic shortening and steel relaxation.
4. The limitation on the percentage of debonded strands of the pretensioned strand group at the ends of beams may be increased to 37.5% provided posttensioning is applied to the beams prior to casting the deck concrete and provided that the total number of debonded strands is equal to or less than 25% of the total area of pretensioned and post-tensioned strands at the time of placement of the deck concrete.

B. Full depth diaphragms are required at all splice (closure pour) and anchorage locations. At closure pour locations, cast intermediate diaphragms with the closure pours. Design diaphragms for out-of-plane loads for chorded girders on a horizontal curve.

C. Integrated drawings in accordance with ***SDG*** 4.5 are required for anchorage zones of post-tensioning ducts and for beams in which ducts deviate both horizontally and vertically.

D. Design and detail clearance at anchorages for future inspection and replacement of unbonded tendons. See ***SDG*** 1.11.1.B for clearance requirements at anchorages.

## 4.8 PRETENSIONED/POST-TENSIONED U-GIRDERS (Rev. 01/17)

A. Pretensioned/post-tensioned U-Girder bridges, whether curved or straight, with full span or spliced girders, are inherently complex to design and build. They require a coordinated effort between designers and detailers in order to develop integrated plans that address all design, detailing and constructability issues. The information contained herein is only part of the requirements necessary to successfully accomplish this task.

*Commentary: Pretensioned/post-tensioned U-girders are primarily intended for use on sharply curved bridges in lieu of steel or concrete segmental box girders. In order to facilitate longer spans, they can also be used on straight or slightly curved bridges in lieu of steel or other concrete girders, or* ***Design Standards****, Index 20200 Series prestressed concrete U-beams. However, due to the inherent complexity of designing*

*and constructing pretensioned/post-tensioned U-girders, the use of **Design Standards**, Index 20200 Series prestressed concrete U-beams is preferred where possible if a multi-box superstructure is to be used.*

B. Design and detail clearance at anchorages for future inspection and replacement of unbonded tendons. See ***SDG*** 1.11.1.B for clearance requirements at anchorages.

### 4.8.1 General

A. The minimum section depth for post-tensioned U-girders is 72". To optimize U-girder formwork standardization and utilization, use the 72", 84" and 96" U-girders developed by PCI and adopted by FDOT.

B. Develop internally haunched girder sections up to 96" deep by maintaining the outside shape and dimensions of standard U-girder sections and thickening the bottom slab internally, or by deepening a standard U-girder shape (longitudinally sloping the bottom of the bottom flange) while maintaining the side slope of the webs. The minimum bottom flange clear width within a haunched section is 2'-0" measured along the top of the bottom flange between inside corner chamfers. For haunched girders, the use of an internal, mildly reinforced, secondary cast bottom flange build-up is permitted provided that the secondary cast concrete is made composite with bottom flange using properly distributed and anchored mechanical reinforcing through the interface. Evaluate effects of differential shrinkage between such a build-up and the girder and specify the use of shrinkage reducing admixtures for the build-up concrete as required.

C. A minimum of two girder lines is required.

D. Cast-in-place lid slabs are required for all curved structures; precast lid slabs are not permitted in any configuration. Lid slabs are typically constructed only after the girder sections are erected and typically before the closure pours are cast and the continuity post-tensioning is applied. Design open girder sections for torsional stresses.

*Commentary: Shallow foundations for temporary supports may not be appropriate; however, when shallow foundations are used, casting the lid slabs prior to casting the closure pours allows for geometric adjustments necessary due to settlement of the temporary supports and minimizes potential damage to the closure pour.*

E. Maximum stress in the longitudinal mild reinforcing steel in the deck is limited to 24 ksi for the Service III limit state.

F. Minimum horizontal radius of a curved U-girder is 500 feet (measured along centerline girder).

G. For horizontally curved U-girders, include additional non-composite dead load on the individual precast U-girder sections to account for the variable web thickness along the length of the girder section.

*Commentary: Typical forming techniques that are used for casting horizontally curved U-girder sections include the use of curved forms for the outer surfaces of the webs and chorded straight form sections for the inner surfaces of webs. This forming*

*technique creates variable thickness webs with the thinnest dimension matching the plan dimension and the thickest dimension being slightly larger than the plan dimension. This variable web thickness is not to be included in the U-girder section properties but must be accounted for in the self weight of the girder.*

H. Minimum length of closure pours between adjacent U-girder sections is 2'-0".

I. Include the necessary plan notes and details to address construction issues associated with geometry control including provisions for providing a settlement monitoring program of the temporary towers and the ability to make field adjustments to the U-girder sections prior to post-tensioning by jacking, etc.

J. List on the plans the assumed construction live load, weight of screed machine and weight of formwork used for the constructability limit state checks.

K. Include the necessary plan notes and details to address all the other construction issues listed in, or associated with, the above requirements.

### 4.8.2 Access and Maintenance

During preliminary engineering and when determining structure configuration give utmost consideration to accessibility and to the safety of bridge inspectors and maintenance. Design post-tensioned U-girders for the following special requirements for inspection and access. Precast, pretensioned (non-post-tensioned) U-girders are exempt from these requirements.

A. Utilities and longitudinal or vertical conveyance drain pipes are not permitted inside U-girders. Where possible, locate drainage inlets adjacent to piers and place associated vertical drain pipes outside of U-girders. Utilize external concrete bump-outs or shrouds to conceal pipes as required. See ***SDM*** Chapter 22 for Pier Drainage Details.

B. Electrical:

   1. Provide interior lighting and electrical outlets at all ingress/egress access openings and at midspan of each span. Only a single interior light and electrical outlet are required if these locations coincide.

   2. Specify in the plans that all electrical and lighting components shall meet the material requirements of ***Design Standards*** Index 21240.

C. Access:

   1. Access Openings in Bottom Flanges

      a. Design U-Girder sections with ingress/egress access openings in the bottom flanges located at maximum 600 feet spacing. Space access openings along the length of the U-Girder such that the distance from any location within the U-Girder to the nearest opening is 300 feet or less. Provide a minimum of two access openings per U-Girder girder line. Whenever feasible and in areas not deemed problematic for access by unauthorized persons or due to bridge security issues, place an access opening near each abutment. Provide additional access openings along the length of the U-Girder as required to

meet the maximum spacing requirement. Avoid placing access openings over traffic lanes, the use of which would require extensive maintenance of traffic operations and at other locations such as over sloped embankment, over water or locations which would otherwise negatively affect the safety of inspectors or the traveling public. Contact the District Maintenance Office for final guidance in establishing access opening locations.

b. The minimum access opening size is 24 inches x 42 inches or 36 inch diameter. Indicate on the plans that access openings are to remain clear and are not to be used for utilities, drain pipes, conduits or other attachments. If these items are required, provide additional openings.

c. Analyze access opening sizes and bottom flange locations for structural effects on the U-Girder. Generally, do not place access openings in zones where the bottom flange is in compression.

d. Specify an Access Hatch Assembly to be provided at each access opening. Develop custom project specific Access Hatch Assembly designs similar to ***Design Standards*** Index 21251 using inswinging, hinged, solid steel access hatches with steel hardware and a lockable hasp on the outside of the hatch. Require suitable keyed commercial grade, weather resistant padlocks with a 2 inch shackle for all access hatches. Require that all padlocks on an individual bridge be keyed alike.

2. Access Openings in Interior Diaphragms

a. Provide a 36 inch diameter access opening through all interior diaphragms. Indicate on the plans that diaphragm access openings are to remain clear and are not to be used for utilities, drain pipes, conduits or other attachments. If these items are required, provide additional areas or openings.

b. If the bottom of the diaphragm access opening is not flush with the bottom flange, provide 2 feet wide minimum concrete or wood ramps at diaphragms to facilitate inspection and equipment movement. Provide ramps with a 1V:4H maximum grade (not including grade of girder) and that are continuous through the access opening. Concrete ramps shall be non-composite and may be constructed as a secondary pour. Composite internal bottom flange build-ups used for haunched girders may serve as ramps. Design wood ramps with plywood decking. Specify marine grade plywood meeting the requirements of BS 1088 for the decking and all other wood to meet the treatment requirements of ***Specifications*** Section 955-2.2 for pedestrian bridges.

c. Specify Access Door Assemblies at both ends of simple span U-Girders and at both ends of continuous U-Girder units. Specify inswinging, hinged steel access doors with steel expanded metal mesh and steel hardware. Expanded metal mesh shall be ½" No. 16 expanded carbon steel metal mesh in accordance with ASTM F 1267, Type I or II, Class 2, Grade A. Equip access doors with a lockable latch that can be opened from both sides of the door. Require suitable keyed commercial grade, weather resistant padlocks with a 2 inch shackle for access doors at abutments. Require that all padlocks on an individual bridge be keyed alike.

*Commentary: The size of the openings in the expanded metal mesh was specifically selected to exclude the Brazilian Free-tailed Bat, Tadarida brasiliensis, but the small mesh size will also exclude other species of bats found in Florida and most, if not all, birds.*

D. See ***SDG*** 4.6.2 Paragraph D for requirements for other exterior openings.

## 4.8.3 Initial Prestressing

A. Design U-Girder segments to be initially prestressed in the casting yard by pretensioning or post-tensioning. The use of U-Girder segments that are only mildly reinforced is not permitted. Design the initial prestressing such that, as a minimum, the following conditions are satisfied:

1. The initial prestressing shall meet the minimum steel provisions of ***LRFD*** [5.7.3.3.2].
2. The initial prestressing shall be capable of resisting all loads applied prior to field-applied post-tensioning, including a superimposed dead load equal to 30% of the uniform weight of the girder segment, without exceeding the stress limitations for pretensioned concrete construction.
3. The initial prestressing force shall be of such magnitude that the initial deflection at release, including the effect of the dead load of the girder, shall be zero or in the positive direction. In computing the initial deflection, the value of the Modulus of Elasticity shall be in accordance with ***SDG*** 1.4.1 for the minimum required strength of concrete at release of the prestressing force. Reduce the effective prestressing force in the strands to account for losses due to elastic shortening and steel relaxation.
4. If initial prestressing is accomplished using pretensioning, the limitation on the percentage of debonded strands of the pretensioned strand group at the ends of girder segments may be increased to 37.5% provided post-tensioning is applied to the girders prior to casting the deck concrete and provided that the total number of debonded strands is equal to or less than 25% of the total area of pretensioned and post-tensioned strands at the time of placement of the deck concrete.

## 4.8.4 Post-Tensioning

A. Use internal post-tensioning within webs and flanges only.

B. Provisions for future post-tensioning are not required.

C. Provide integrated drawings in accordance with ***SDG*** 4.5 for anchorage zones of post-tensioning ducts and girder segments in which ducts deviate both vertically and horizontally (not including the horizontal curvature of a curved girder segment itself).

## 4.8.5 Transverse Concrete Deck Analysis

For U-girder bridges, perform a transverse deck analysis at the Service I and Strength I load combinations using the truck and tandem portion of the HL-93 live load (do not include the lane load). For deck design, do not include the wind effects for the Service I

load combination. All analyses will be performed assuming no benefit from the stiffening effects of any traffic or pedestrian railing and with a maximum multiple presence factor not greater than 1.0. For the Service I load combination in transversely prestressed concrete decks, limit the outer fiber stress due to transverse bending to $0.095\sqrt{f'_c}$ [ksi] ($3\sqrt{f'_c}$ [psi]) for aggressive environments and $0.19\sqrt{f'_c}$ [ksi] ($6\sqrt{f'_c}$ [psi]) for all other environments. For the Service I load combination in reinforced concrete decks, see ***LRFD*** [5.7.3.4].

### 4.8.6 Principal Stresses in Spliced U-Girder Webs

For U-girder bridges, the principal tensile stresses in the webs during the life of the structure including construction shall meet the Service III limit state requirements of ***LRFD*** [5.8.5].

## 4.9 APPROACH SLABS

A. Utilize reinforced concrete approach slabs with a minimum thickness of 1'-0" at each end of each bridge.

B. Design and detail approach slabs:
   1. To be a minimum length as shown in Figure 4.9-1.
   2. To be pin supported on the top of the end bent backwall, to span unsupported for a minimum of 10'-0" measured perpendicular from the back face of the end bent backwall and for the remainder of the approach slab to be supported on an elastic foundation.
   3. To be shaped in plan view as shown in Figure 4.9-1.
   4. To have a minimum 1.75" thick asphalt overlay if the approach roadway has flexible pavement.

### Figure 4.9-1 Approach Slab Geometry Schematic

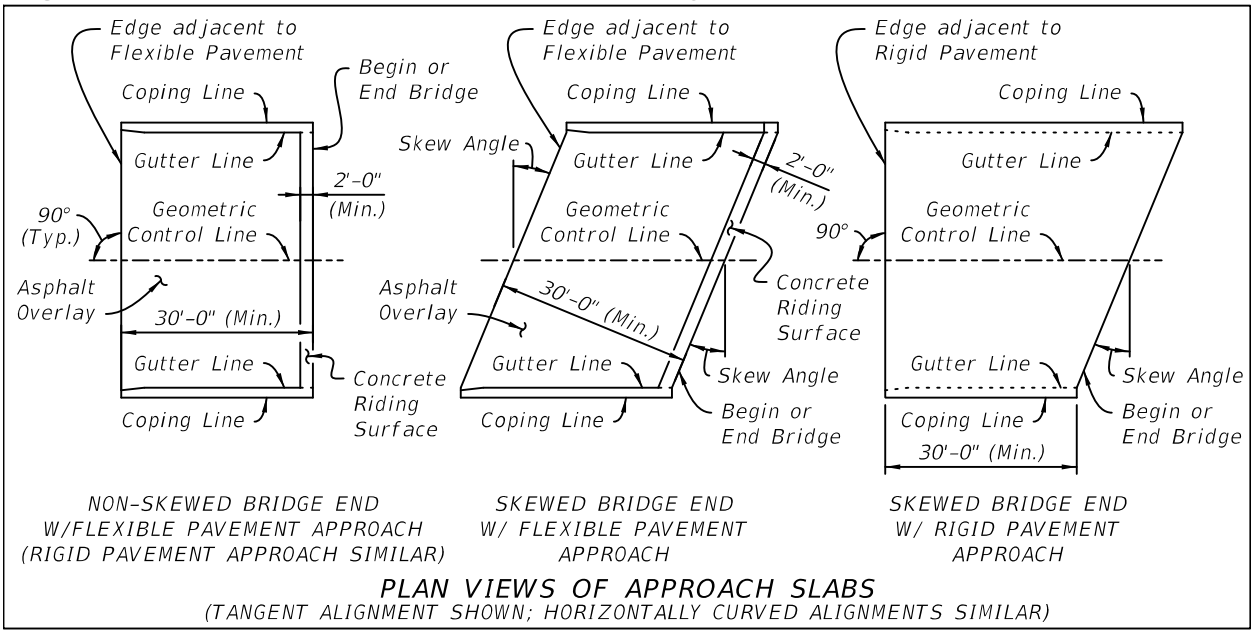

# 5 SUPERSTRUCTURE - STEEL

## 5.1 GENERAL (Rev. 01/17)

A. Level of analysis:

1. For straight bridges with one or more supports skewed greater than 20°, a grid, 3-D or finite element analysis is required considering the structure acting as a unit.
2. For curved bridges, a 3-D or finite element analysis is required.
3. For bridges with straddle and/or integral bent/pier caps, a 3-D or finite element analysis is required.
4. For bridges with hammerhead and/or C-piers with long cantilevers, evaluate the need for a 3-D or finite element analysis of the girders in order to account for deflection of the pier cap.

B. Design and detail steel superstructures for Steel Dead Load Fit (SDLF). No Load Fit (NLF) and Erected Fit (EF) may be used where appropriate but Total Dead Load Fit (TDLF) is not permitted without SDO approval.

C. Refer to AASHTO/NSBA Steel Collaboration Standards G12.1 ***Guidelines for Design for Constructability,*** G1.4 ***Guidelines for Design Details*** and G13.1 ***Guidelines for Steel Girder Bridge Analysis***.
http://www.steelbridges.org/

### 5.1.1 Corrosion Prevention

A. To reduce corrosion potential, utilize special details that minimize the retention of water and debris.

B. Consider special coatings developed to provide extra protection in harsh environments.

C. Consider the corrosion potential of box structures versus plate girders. Box Girders are preferred compared to plate girders when located in extremely aggressive environments.

| **Modification for Non-Conventional Projects:** |
|---|
| Delete ***SDG*** 5.1.1.C and see the RFP for requirements. |

D. See the ***PPM***, Volume1, Section 2.10 for minimum vertical clearances.

### 5.1.2 Girder Transportation

The EOR is responsible for investigating the feasibility of transportation for heavy, long and/or deep girder field sections. In general, the EOR should consider the following during the design phase:

A. Whether or not multiple routes exist between the bridge site and a major transportation facility.

B. The transportation of field sections longer than 130 ft or weighing more than 160,000 pounds requires coordination through the Department's Permit Office during the design phase of the project. Shorter and/or lighter field sections may be required if access to the bridge site is limited by roadway(s) with sharp horizontal curvature or weight restrictions.

C. Where field splice locations required by design result in lengths greater than 130 feet, design and detail "Optional Field Splices" in the plans.

D. For curved steel box girders, prefabricated trusses, and integral pier cap elements, size field pieces such that the total hauling width does not exceed 16 feet.

| **Modification for Non-Conventional Projects:** |
| --- |
| Delete ***SDG*** 5.1.2.C and ***SDG*** 5.1.2.D. |

E. Routes shall be investigated for obstructions for girder depths exceeding 9'-0," or if posted height restrictions exist on route.

*Commentary: Show erection sequence in the plans consistent with typical crane capacities, reach limitations and based on girder stability requirements. In many cases, field sections can be spliced on the ground, at the site, prior to lifting into place.*

*Length of travel significantly increases the difficulty to transport girders. Alternative transportation should be considered as well for heavy, long and/or deep girders. Please note that transportation of girders weighing more than 160,000 pounds may require analysis by a Specialty Engineer, bridge strengthening, or other unique measures.*

### 5.1.3 Dapped Girder Ends

Dapped steel box girders or dapped steel plate girders are not permitted.

### 5.1.4 Decks

See ***SDG*** 4.2 for deck requirements.

### 5.1.5 Expansion Joints

Expansion joints within spans, i.e. ¼ point hinges, are not allowed.

## 5.2 DEAD LOAD CAMBER [6.7.2]

A. Design the structure, including the deck, with a sequence for placing the concrete deck. Show the placement sequence on the plans.

B. Develop camber diagrams to account for the deck placing sequence. Analyze the superstructure geometry and properties and use the appropriate level of analysis to determine deflections and camber.

*Commentary: Fabricate steel girders to both match the profile grade with an allowance for dead load deflection and minimize build-up when the deck is placed. A grid, 3-D or*

*finite element analysis is required to determine girder deflections and required camber for bridges with skews greater than 20°, curved bridges, and bridges with large overhangs on the exterior girder.*

## 5.3 STRUCTURAL STEEL [6.4.1]

### 5.3.1 General

A. Use weathering steel (ASTM A 709 Grades 50W, HPS 50W, and HPS 70W) left uncoated for all new steel I-girder and Box-girder bridges unless prohibited by site conditions or otherwise approved by the Chief Engineer. Use ASTM A 709 Grades 36, 50, 50W, HPS 50W or HPS 70W steel for all new steel I-girder and Box-girder bridges that will be coated. Miscellaneous hardware, including shapes, plates, and threaded bar stock (except when used on uncoated weathering steel structures) shall conform to ASTM A709, Grade 36. Do not use ASTM A 709 Grade HPS 100W steel without prior approval of the SDO. ***SDG*** 1.3 provides guidelines on suitable site conditions. See also FHWA Technical Advisory T 5140.22 for additional information.

| **Modification for Non-Conventional Projects:** |
|---|
| Delete ***SDG*** 5.3.1.A and insert the following:<br>A. Use weathering steel (ASTM A 709 Grades 50W, HPS 50W, and HPS 70W), left uncoated, for all new steel bridges unless prohibited by site conditions or otherwise stated in the RFP. Miscellaneous hardware, including shapes, plates, and threaded bar stock (except when used on uncoated weathering steel structures) shall conform to ASTM A709, Grade 36. Do not use ASTM A 709 Grade HPS 100W steel. ***SDG*** 1.3 provides guidelines on suitable site conditions. See also FHWA Technical Advisory T 5140.22 for additional information. |

B. Use ASTM A 709 HPS 50W or HPS 70W for steel substructure elements excluding piles. The designer is responsible for investigating the availability of HPS steel and for evaluating the potential impact of its use on the construction schedule.

*Commentary: HPS steel is the preferred material for steel substructure elements because of its added toughness.*

C. Show the ASTM A709 designation on the contract documents.

*Commentary: ASTM A709 includes notch toughness, weldability and other supplementary requirements for steel bridges. When these supplementary requirements are specified, they exceed the requirements of other ASTM steel specifications.*

### 5.3.2 Testing (Rev. 01/17)

A. Fracture critical members are defined as tension members or tension components of nonredundant members whose failure would result in the collapse of the structure. Examples include:

1. All tension components of single box superstructures.

2. All tension components of double plate girder superstructures.
3. All tension components in the positive moment region of double box superstructures. Negative moment regions over the piers have four top flanges and are therefore considered redundant.
4. All tension components of straddle, hammerhead and C-piers.

B. Avoid fracture critical members. Fracture critical requirements are expensive due to the intensive welding procedures, base metal and weld tests, and inspections after fabrication. Two girder systems on non-movable structures are undesirable and must be approved by the State Structures Design Engineer.

C. Designate on the plans, all:
1. Components (non-fracture critical tension components) for which CVN testing only is required.
2. Fracture critical components.
3. Splice plate testing requirements

   Note: Splice plates are to be tested to the requirements of the tension components to which they are attached. See ***SDM*** Chapter 16.

## 5.4 BOLTS [6.4.3.1] (Rev. 01/17)

A. Design structural bolted connections as "slip-critical." Use ASTM F3125 Grade A325, Type 1, high-strength bolts for painted connections, and Type 3 bolts for unpainted weathering steel connections.

B. Do not use ASTM F3125 Grade A490 bolts unless approved by the SDO.

C. Non-high-strength bolts shall conform to ASTM A307.

D. Bolt diameters of 3/4, 7/8, 1, or 1 1/8-inch typically should be used. Larger bolts may be used with prior approval by the Department. Use one diameter and grade of bolt for any individual connection. See also ***SDM*** Chapter 16.

## 5.5 MINIMUM STEEL DIMENSIONS [6.7.3]

A. The following minimum dimensions have been selected to reduce distortion caused by welding and to improve girder stiffness for shipping and handling.
1. The minimum thickness of plate girder and box girder webs is 7/16-inch.
2. The minimum flange size for plate girders and top flanges of box girders is 3/4-inch x 12-inches.
3. The minimum box girder bottom flange thickness is 1/2-inch.
4. The minimum stiffener thickness is 1/2-inch.

B. Specify flange plate widths and web plate depths in 1-inch increments. Keep flange widths constant within field sections.

C. Specify plates in accordance with the commonly available thicknesses of Table 5.5-1.

D. Minimize the different flange plate thicknesses so that the fabricator is not required to order small quantities. See ***SDM*** Chapter 16.

### Table 5.5-1 Thickness Increments for Common Steel Plates

| THICKNESS INCREMENT | PLATE THICKNESS |
|---|---|
| 1/8-inch (1/16-inch for web plates) | up to 2-1/2-inches |
| 1/4-inch | > 2-1/2-inches |

| **Modification for Non-Conventional Projects:** |
|---|
| Delete ***SDG*** 5.5.B, ***SDG*** 5.5.C, ***SDG*** 5.5.D and ***SDG*** Table 5.5-1. |

## 5.6 BOX SECTIONS

### 5.6.1 General

During preliminary engineering and when determining structure configuration, give utmost consideration to accessibility and to the safety of bridge inspectors and maintenance. See ***SDM*** Chapter 16.

### 5.6.2 Access and Maintenance

A. Height:

For maintenance and inspection, the minimum interior, clear height of box girders is 6 feet.

B. Electrical:

1. Design and detail interior lighting and electrical outlets in accordance with ***Design Standards*** Index 21240.
2. Show interior lighting and electrical outlets at the following locations:
   a. all ingress/egress access openings
   b. both sides of diaphragms where girder is continuous
   c. at the inside face of diaphragms where the girder is discontinuous, e.g. at end bents and expansion joints.
   d. spaced between the above locations at approximately equal intervals not to exceed 50 feet.

   Only a single interior light and electrical outlet are required if any of the above locations coincide.
3. Where interior height permits, show lighting mounted along center of box.
4. Locate switches at each end of each span and at every access opening.

C. Access:

1. Access Openings in Bottom Flanges

   a. Design box sections with ingress/egress access openings in the bottom flanges located at maximum 600 feet spacing. Space access openings along the length of the box girder such that the distance from any location within the box girder to the nearest opening is 300 feet or less. Provide a minimum of two access openings per box girder line. Whenever feasible and in areas not deemed problematic for access by unauthorized persons or due to bridge security issues, place an access opening near each abutment. Provide additional access openings along the length of the box girder as required to meet the maximum spacing requirement. Avoid placing access openings over traffic lanes, the use of which would require extensive maintenance of traffic operations and at other locations such as over sloped embankment, over water or locations which would otherwise negatively affect the safety of inspectors or the traveling public. Contact the District Maintenance Office for final guidance in establishing access opening locations.

   b. The minimum access opening size is 32 inches x 42 inches or 36 inch diameter. Indicate on the plans that access openings are to remain clear and are not to be used for utilities, drain pipes, conduits or other attachments. If these items are required, provide additional openings.

   c. Analyze access opening sizes and bottom flange locations for structural effects on the box girder. Generally, do not place access openings in zones where the bottom flange is in compression.

   d. Specify Access Hatch Assemblies in accordance with ***Design Standards*** Index 21250 to be provided at each 36 inch diameter access opening. If other size access openings are used or if this Design Standard cannot otherwise be used, develop custom project specific designs based on the standard using inswinging, hinged, solid steel access hatches with steel hardware and a lockable hasp on the outside of the hatch. Do not specify ladder braces at locations where the access opening is not accessible using an extension ladder, e.g. bottom flange heights greater than 25 feet above the ground. Require suitable keyed commercial grade, weather resistant padlocks with a 2 inch shackle for all access hatches. Require that all padlocks on an individual bridge be keyed alike.

2. Access Openings in Interior Diaphragms

   a. Provide an access opening through all interior diaphragms.

   b. The minimum diaphragm access opening size is 32 inches wide x 42 inches tall or 36 inch diameter. Indicate on the plans that diaphragm access openings are to remain clear and are not to be used for utilities, drain pipes, conduits or other attachments. If these items are required, provide additional areas or openings.

c. Specify Access Door Assemblies in accordance with ***Design Standards*** Index 21252 to be provided at both ends of simple span box girders and at both ends of continuous box girder units. When this Design Standard cannot be used, develop custom project specific designs based on the standard using inswinging, hinged steel access doors with steel expanded metal mesh and steel hardware. Expanded metal mesh shall be ½" No. 16 expanded carbon steel metal mesh in accordance with ASTM F 1267, Type I or II, Class 2, Grade A. Equip access doors with a lockable latch that can be opened from both sides of the door. Require suitable keyed commercial grade, weather resistant padlocks with a 2 inch shackle for access doors at abutments. Require that all padlocks on an individual bridge be keyed alike.

*Commentary: The size of the openings in the expanded metal mesh was specifically selected to exclude the Brazilian Free-tailed Bat, Tadarida brasiliensis, but the small mesh size will also exclude other species of bats found in Florida and most, if not all, birds.*

D. Other Exterior Openings:

1. Design each box girder with minimum 2-inch diameter ventilation or drain holes located in the bottom flange on both sides of the box spaced at approximately 50 feet or as needed to provide proper drainage. Place drains at all low points against internal barriers.

2. Require 0.25-inch mesh screen on all exterior openings not covered by a door. This includes holes in webs through which pass utility pipes, ventilation holes, drain holes, etc. Welding of screen to structural steel components is prohibited. Show screen to be attached to structural steel components with epoxy per ***SDM*** Figure 16.11-4 Note "A".

3. Design flexible barriers to seal openings between expansion joint segments of adjacent end units to prevent birds from roosting on the box end ledges. Barriers shall be UV and weather resistant and easily replaceable.

### 5.6.3 Cross Frames [6.7.4]

A. Design external cross frames as an "X-frame" or a "K-frame" as noted for "I-girders". Permanent external cross frames for steel box structures are not desirable.

B. Design internal cross frames as a "K-frame”. Show internal cross frames to be connected by welding or bolting to stiffeners in the fabrication shop.

C. Detail cross frames to be attached to box girders at stiffener locations.

*Commentary: An "X-frame" internal diaphragm is easier to fabricate and erect than a "K-frame," but the "K-frame" allows easier inspection access in box girders.*

### 5.6.4 Lateral Bracing [6.7.5]

A. For box girders, design an internal lateral bracing system in the plane of the top flange.

B. When setting haunch heights, include height necessary to avoid conflicts between lateral bracing and stay-in-place metal forms.

*Commentary: A single diagonal member is preferred over an "X-diagonal" configuration for ease of fabrication and erection.*

### 5.6.5 Transverse Concrete Deck Analysis

For steel box girder bridges, perform a transverse deck analysis at the Service I and Strength I load combinations using the truck and tandem portion of the HL-93 live load (do not include the lane load). For deck design, do not include the wind effects for the Service I load combination. All analyses will be performed assuming no benefit from the stiffening effects of any traffic railing barrier and with a maximum multiple presence factor not greater than 1.0. For the Service I load combination in transversely prestressed concrete decks, limit the outer fiber stress due to transverse bending to $3\sqrt{f'_c}$ for aggressive environments and $6\sqrt{f'_c}$ for all other environments. For the Service I load combination in reinforced concrete decks, see ***LRFD*** [5.7.3.4].

## 5.7 DIAPHRAGMS AND CROSS FRAMES FOR I-GIRDERS [6.7.4]

A. Design cross frames and diaphragms (cross frames at piers and abutments) with bolted connections at transverse and bearing stiffener locations and connected directly to stiffeners without the use of connection plates whenever possible. Generally, a "K-frame" detailed to eliminate variation from one cross frame to another is the most economical arrangement and should be used. For straight bridges with a constant cross section, parallel girders, and a girder-spacing-to-girder-depth ratio less than two, an "X-frame" design is generally the most economical and must be considered.

| **Modification for Non-Conventional Projects:** |
|---|
| Delete ***SDG*** 5.7.A. |

B. For straight I-girder units where supports are parallel and all supports are skewed less than or equal to 20°, orient cross frames parallel to the supports. In general, for all other cases, orient cross frames radial or normal to girder lines.

## 5.8 TRANSVERSE INTERMEDIATE STIFFENERS [6.10.11.1]

A. Specify that transverse intermediate stiffeners providing cross frame connections be fillet welded to the compression flange and fillet welded or bolted to the tension flange or flanges subject to stress reversal. If bolted tab plates are used, specify that the bolts are to be installed prior to making welds.

*Commentary: On tension flanges, welded connections are preferred because of the lower cost, but the design of the flange must consider the appropriate fatigue detail category. A bolted connection is acceptable if the cost is justified.*

B. For straight I-girder bridges, specify that transverse intermediate stiffeners without cross frame connections have a "tight-fit" or be cut-back at the tension flange and be fillet welded to the compression flange. For curved I-girder bridges, transverse stiffeners shall be attached to both flanges.

C. For straight box girder bridges, specify that intermediate stiffeners not used as connection plates be fillet welded to the compression flange and cut back at the tension and stress reversal flanges.

## 5.9 BEARING STIFFENERS [6.10.11.2]

A. For plate girder bridges with grades less than or equal to 4%, place bearing stiffeners normal to the bottom flange. The effect of the grade shall be considered in design of the stiffener. For grades greater than 4%, orient bearing stiffeners to be vertical under full dead load.

B. For box girder bridges, place bearing stiffeners normal to the bottom flange.

C. For bearing stiffeners that provide diaphragm connections, specify a "finish-to-bear" finish on the bottom flange and specify fillet welded connections to both the top and bottom flanges.

D. In negative moment regions only, stiffeners with attached diaphragms may be bolted to the top flange.

*Commentary: In negative moment regions, welded connections are preferred because of the lower cost, but the design of the flange must consider the appropriate fatigue detail category.*

## 5.10 LONGITUDINAL STIFFENERS [6.10.11.3]

Avoid the use of longitudinal stiffeners. If they must be used, the stiffener should be made continuous on one side of the web with transverse stiffeners located on the other side of the web. For aesthetic reasons, avoid placing transverse stiffeners on the exterior face of exterior girders.

*Commentary: If longitudinal stiffeners are considered, an analysis of material and labor costs should be performed to justify their use. Their use may be justified on deep, haunched girders but normally cannot be justified on constant depth girders. When longitudinal stiffeners are used on the same side of the web as the transverse stiffeners, the intersection of the stiffeners must be carefully designed with respect to fatigue.*

## 5.11 CONNECTIONS AND SPLICES [6.13]

A. Specify and detail bolted (not welded) field connections. Field welding of sole plates to bottom flanges of Steel I-Girders is permissible. Details shall be included in the plans in accordance with ***SDM*** 16.11. Other field welding is allowed only by prior written approval by the SDO or the appropriate DSDO and then, only when bolting is impractical or impossible.

B. Where cantilever brackets are connected to exterior girders and tie plates are used to connect the top flange of the bracket to the top flange of the floor beam, do not show the tie plates connected to the girder top flange. To account for alignment tolerances, detail short, slotted holes in the top flange of the cantilever brackets (perpendicular to the bracket web). Reduce the allowable bolt stress accordingly.

### 5.11.1 Slip Resistance [6.13.2.8]

A. Design bolted connections for Class A faying surface condition except as noted below. For weathering steel bridges that are not to be painted, design bolted connections for Class B faying surface condition.

B. When the thickness of the plate adjacent to the nut is greater than or equal to ¾ inch, base the strength of the connection on the bolt shear strength with threads excluded from the shear plane.

*Commentary: This surface condition agrees with Florida fabrication practice.*

### 5.11.2 Welded Connections [6.13.3]

A. Do not show a specific, pre-qualified, complete-joint penetration weld designation on the plans unless a certain type of weld; i.e., "V," "J," "U," etc., is required. See ***SDM*** Chapter 16, Structural Steel Girders.

*Commentary: The fabricator should be allowed to select the type of complete-joint penetration weld to use, and should show all welds on the shop drawings.*

| **Modification for Non-Conventional Projects:** |
|---|
| Delete ***SDG*** 5.11.2.A. |

B. On the plans, identify areas that are subject to tension and areas subject to stress reversal.

*Commentary: This information will enable inspection personnel to identify the type and extent of testing required. Also, the shop drawings will further identify these areas.*

C. When welding is required during rehabilitation or widening of an existing structure, show the type of existing base metal on the plans. If the base metal type cannot be determined, or if the type is not an approved base metal included in the most current edition of the AASHTO/AWS D1.5 Bridge Welding Code, consult with the State Materials Office to obtain recommendations on how the welding should be specified. Some destructive sampling of the existing structure may be required in order to provide these recommendations. The welding inspection for the rehabilitation or modification for bridge structures should follow the current AASHTO/AWS D1.5 requirements suitable for the type of weld and service conditions and be specified on the plans. Inspection criteria may change based on the actual field conditions.

| **Modification for Non-Conventional Projects:** |
|---|
| Delete ***SDG*** 5.11.2.C and see the RFP for requirements. |

### 5.11.3 Welded Splices [6.13.6.2]

A. At flange transitions, do not reduce the cross-sectional area by more than one-half the area of the larger flange plate.

*Commentary: These proportions will allow a smooth flow of stress through the splice.*

B. Maintain constant flange widths within each field-bolted section.

*Commentary: By having constant width flange plates in a field section, the fabricator may order plates in multiples of the flange width, butt weld the plates full width, and then strip-out the flanges. Thus, the fabricator is required to make a minimum number of butt welds, handle a minimum number of pieces, and, thereby, minimize his fabrication costs.*

C. The following criteria may be used to make a determination of the number of pounds, $\Delta \mathbf{w}$, of material that must be saved to justify the cost of introducing a flange transition:

1. For 36 ksi material: $\Delta \mathbf{w}$ = 300 + (25.0) x (area of the smaller flange plate, $in^2$)
2. For 50 ksi material: $\Delta \mathbf{w}$ = 250 + (21.3) x (area of the smaller flange plate, $in^2$)
3. For 70 ksi material: $\Delta \mathbf{w}$ = 220 + (18.8) x (area of the smaller flange plate, $in^2$)

D. In general, the number of flange splices within a field section should never be greater than two. It is more economical to extend a thicker plate in many instances because of the labor cost involved in making a splice.

E. Keep the flange plates of adjacent girders the same thickness where possible.

F. Size plates based on the rolled sizes available from the mills.

G. Keep the number of different plate thicknesses reasonable for the size of the project. Avoid sizing flange thicknesses in 1/8" increments.

| **Modification for Non-Conventional Projects:** |
| --- |
| Delete ***SDG*** 5.11.3 and insert the following:<br>At flange transitions, do not reduce the cross-sectional area by more than one-half the area of the larger flange plate.<br>*Commentary: These proportions will allow a smooth flow of stress through the splice.* |

## 5.12 CORROSION PROTECTION

A. The default treatment for new steel I-girder and box-girder bridges is uncoated weathering steel where site conditions warrant (see ***SDG*** 1.3.2). An Inorganic Zinc Coating System shall be used where site conditions preclude uncoated weathering steel and may be used elsewhere with approval of the Chief Engineer. Use of a High Performance Coating System to any extent for new Steel I-Girder or Box-Girder bridges requires written approval from the Chief Engineer. Other systems must be approved by the State Materials Office (SMO).

| **Modification for Non-Conventional Projects:** |
| --- |
| Delete ***SDG*** 5.12.A and insert the following:<br>A. The default treatment for new steel I-girder and box-girder bridges is uncoated weathering steel where site conditions warrant (see ***SDG*** 1.3.2). An Inorganic Zinc Coating System shall be used where site conditions preclude uncoated weathering steel. See the RFP for project specific requirements. |

B. Specify method of protection and locations on structure. Specify one of the following for treatment of exterior and/or interior girders:

1. Uncoated Weathering Steel. See ***SDG*** 1.3 for suitable site requirements for the use of uncoated weathering steel. See ***SDM*** Chapter 16 for preferred details.
2. Inorganic Zinc Coating System. Specify an Inorganic Zinc Coating System in accordance with ***Specifications*** Section 975.
3. High Performance Coating System. Specify a High Performance Coating System in accordance with ***Specifications*** Section 975. The default color is a uniform gray similar to Federal Standard No. 595, Color No. 36622. Other colors or a gloss finish must be approved by the District in consultation with the State Materials Office (SMO).

## 5.12.1 Environmental Testing for Site Specific Corrosion Issues

A. Contact the State Materials Office (SMO) early in the BDR phase of the project to determine if the bridge location meets the environmental conditions for the use of uncoated weathering steel.

B. Where coating of steel is required the following site specific criteria may require specialty corrosion protection systems:

1. Locations where the pH of the rainfall or condensation is less than 4 and greater than 10.
2. Locations subject to salt spray and salt laden run-off.
3. Locations subject to concentrated pollution caused by the following sources: coal burning power plant, phosphate plant, acid manufacturing plant, any site yielding high levels of sulfur compounds.

C. For sites with any of the above conditions, a review and recommendation from the SMO is required to identify the appropriate corrosion control coating system.

| **Modification for Non-Conventional Projects:** |
| --- |
| Delete ***SDG*** 5.12.1 and see the RFP for requirements. |

### 5.12.2 Galvanizing (Rev. 01/17)

A. Galvanizing of Bolts for Bridges: Specify all anchor bolts and rods, nuts, washers and other associated tie-down hardware to be hot-dip galvanized. Specify galvanized ASTM F3125 Grade A325 bolts for connecting painted structural steel members on a project specific basis as directed by the District.

B. Galvanizing of Bolts for Miscellaneous Structures: Specify bolts for connecting structural steel members of miscellaneous structures such as overhead sign structures, traffic mast arms, ground-mounted signs, bridge mounted signs, etc. to be hot-dip galvanized.

*Commentary: While ASTM A307 (coarse thread) bolts must be hot-dip galvanized, ASTM F3125 Grade A325 (fine thread) bolts must be mechanically galvanized when they are required to be fully tensioned. Other applications not requiring full tensioning of the bolts may use hot-dip galvanized ASTM F3125 Grade A325 bolts.*

C. Specify all ladders, platforms, grating and other miscellaneous steel items to be hot-dip galvanized.

## 5.13 GLOBAL DISPLACEMENT AMPLIFICATION IN NARROW I-GIRDER BRIDGE UNITS

This section supplements ***LRFD*** [6.10.3.4.2]. In lieu of ***LRFD*** [Equation 6.10.3.4.2-1], calculate the global lateral-torsional buckling resistance as follows:

$$M_{gs} = C_g C_b \frac{\pi^2 w_g E}{L^2} \sqrt{I_{eff} I_x} \qquad \text{[Eq. 5-1]}$$

Where:

$C_g$ = factor for number of girders, taken as 1.0 for two girder systems and 1.22 for three girder systems.

$C_b$ = moment gradient modifier, taken as 1.12 for uniform vertical load; or taken as 1.0 for all loading conditions for systems with top flange lateral bracing at each end of the span.

All other terms as per ***LRFD*** [6.10.3.4.2].

*Commentary: For continuous span units, Equation 5-1 may underestimate $M_{gs}$. An eigenvalue or second-order buckling analysis may be warranted to determine $M_{gs}$ for continuous span units.*

# 6 SUPERSTRUCTURE COMPONENTS

## 6.1 GENERAL

This Chapter contains information and criteria related to the design, reinforcing, detailing, and construction of bridge superstructure elements and includes deviations from ***LRFD***. This chapter covers erection schemes, beam and girder stability requirements, railings, curbs, joints, bearings, and deck drains. For additional information on concrete beams, decks, and steel girders, see ***SDG*** Chapter 4 and ***SDG*** Chapter 5.

## 6.2 CURBS AND MEDIANS [13.11]

A. For bridge projects that utilize curbs, match the curb height and batter on the roadway approaches.

B. When the roadway approaches have a raised median, design the bridge median to match that on the roadway.

## 6.3 TEMPERATURE MOVEMENT [3.12.2]

For all bridges other than longitudinally post-tensioned, segmental concrete bridges, calculate movement due to temperature variation (range) with an assumed mean temperature of 70 degrees Fahrenheit at the time of construction. Base joint and bearing design on the expansion and contraction for temperature ranges of ***SDG*** Table 2.7.1-1.

## 6.4 EXPANSION JOINTS

A. For new construction, use only expansion joint types listed in Table 6.4-1.

B. When an expansion joint is required, use one of the standardized expansion joints or details if possible. When a non-standardized expansion joint is required (e.g. finger joints and modular joints), design the joint using the following criteria:

### Table 6.4-1 Expansion Joint Width Limitations by Joint Type

| Expansion Joint Type | Maximum Open Width "W" (measured in the direction of travel at deck surface) |
|---|---|
| Hot Poured or Poured Joint without Backer Rod | 3/4-inch |
| Poured Joint with Backer Rod | 3-inches |
| Armored Elastomeric Strip Seal (Single gap) | Per ***LRFD*** [14.5.3.2] |
| Modular Joint (Multiple modular gaps) | Per ***LRFD*** [14.5.3.2] |
| Finger Joint | Per ***LRFD*** [14.5.3.2] |

### 6.4.1 General Design Provisions [14.5.1] (Rev. 01/17)

A. Open expansion joints for new construction are not permitted except adjacent to or between moveable spans.

B. Provide upturned joints adjacent to the gutter line of sufficient height to contain runoff from the bridge deck at the following locations:
   1. On the low side of decks
   2. On the high side of decks if the cross slope at the joint is less than 1%
   3. On the high side of deck sections within sidewalks if the spread within the sidewalk will extend the full width of the sidewalk

C. Expansion joint details in sidewalks must meet all applicable requirements of the Americans with Disabilities Act. To meet these requirements, use slip resistant galvanized steel sidewalk cover plates at all expansion joints located within sidewalks. Specify sidewalk cover plates to be in accordance with ***Specifications*** Section 458. For modular and finger expansion joints, design the cover plates to extend over the entire metallic portions of the joints when the joints are in the full open positions. See ***Design Standards*** Indexes 21100 and 21110 for details of sidewalk cover plates that are used with poured and strip seal type expansion joints. Provide similar details in the plans for modular and finger expansion joints.

D. Do not design expansion joints to facilitate vertical extension to accommodate a future wearing surface unless a wearing surface is specifically required or planned to be used on the bridge.

## 6.4.2 Movement [14.4] [14.5.3]

The width, "**W**", of the joint must meet the requirements of ***LRFD*** [14.5.3.2], except that "**W**" for the different joint types must not exceed the appropriate value from ***SDG*** Table 6.4-1. When designing and specifying in the Plans the joint opening at 70 degrees Fahrenheit, either the design width "**W**" must be decreased by the amount of anticipated movement due to creep and shrinkage, or the joint opening must be set to the minimum width for installing the joint, whichever results in the initial wider joint opening.

## 6.4.3 Expansion Joints for Bridge Widenings

A. Contact the District Maintenance Office to determine the type and condition of all existing expansion joints on bridges that are to be widened. For the purposes of these requirements, existing expansion joint types defined by group are:
   1. Group 1: Armored elastomeric strip seal, compression seal, poured rubber, open joint, poured joint with backer rod, copper water-stop, and "Jeene."
   2. Group 2: Sliding Plate, finger joint, and modular.

   See specific requirements for these groups in the following sections.

B. When existing joints are to be extended into a bridge widening, determine the extent of existing concrete deck to be removed. Where required, limit removal of existing concrete to what is necessary to remove the existing joint armor and to permit proper anchorage of the new joint armor. Detail the existing joint removal and note that the Contractor must not damage the existing deck reinforcing steel when installing the new joint.

C. For all bridge widenings regardless of expansion joint type, include requirements in the Plans that all concrete spalls adjacent to existing expansion joints that are to remain are to be repaired. Include project specific details and notes as required.

| **Modification for Non-Conventional Projects:** |
| --- |
| Delete ***SDG*** 6.4.3 and see the RFP for requirements. |

## 6.4.4 Bridge Widenings - Group 1 Expansion Joints

A. If the existing expansion joint is an armored elastomeric strip seal and the edge rails and adjacent deck sections are in good condition, remove the existing elastomeric seal element, portions of the edge rails as required and upturned edge rail ends (if present), install new compatible edge rails in the widened portion of the bridge and provide a new continuous elastomeric seal element across the entire deck that is compatible with both the existing and new edge rails. Be aware of and make provisions in the Plans for the differences between the various proprietary strip seal expansion joints that have historically been used in Florida.

B. If the existing expansion joint is an armored compression seal and the armor and adjacent deck sections are in good condition, remove the existing compression seal, portions of the armor as required and upturned armor ends (if present), match the open joint width in the widened portion of the bridge and install a new poured joint with backer rod, poured rubber joint or leave the joint open. The use of joint armor in the widened portion of the bridge deck is not mandatory.

C. If the existing armored joint is in poor or irreparable condition, remove the existing seal and armor as required, repair or replace the damaged concrete and armor as required, and install a new Group 1 Joint other than a compression seal or copper water stop.

D. If the existing joint consists of poured rubber with or without a copper waterstop, remove the upper portion of the existing joint material as required to install a new poured joint with backer rod, extend the joint gap into the widening, and install a new poured joint with backer rod across the entire bridge width.

E. If the existing joint is a poured joint with backer rod that is performing satisfactorily, extend the joint gap into the widening and install a compatible poured joint with backer rod, header material, armor, etc., in the widening. Splice the new compatible poured joint onto the existing poured joint that is to remain in place. If the existing poured joint is not performing satisfactorily, determine the cause of the problem, evaluate the appropriateness of the continued use of a poured joint, and if appropriate use a poured joint with backer rod in the widening as described above. Include requirements and details for the repair or replacement of the existing poured joint, header material, armor, etc., as part of the construction of the bridge widening as necessary.

F. If the existing joint is an open joint and is performing satisfactorily as an open joint, extend the joint gap and open joint into the widening. If it is not performing satisfactorily, determine the cause of the problem, evaluate the appropriateness of the continued use of an open joint, and if appropriate extend the joint gap into the widening and use a poured joint with backer rod across the entire width of the bridge as described above.

G. If the existing joint is a Jeene Joint and is performing satisfactorily, extend the joint gap and any necessary blockouts, armor, headers, etc. into the widening, remove the existing Jeene Joint seal and provide a new continuous Jeene Joint seal across the entire width of the deck. If it is not practicable to install a new Jeene Joint, provide a new joint system from the Group 1 list other than a compression seal or copper water stop.

| **Modification for Non-Conventional Projects:** |
| --- |
| Delete ***SDG*** 6.4.4 and see the RFP for requirements. |

### 6.4.5 Bridge Widenings - Group 2 Expansion Joints

A. If the existing expansion joint is in good condition or repairable, extend it into the widened portion of the bridge using the same type of expansion joint. Include details for any needed repairs of the existing section of joint to remain and installation of new continuous seal elements as required. Require that lengthening be performed in conformance with the expansion joint manufacturer's recommendations. Be aware of and make provisions in the Plans for the differences between the various proprietary modular expansion joints that have historically been used in Florida.

B. If the existing expansion joint is proprietary and no longer available, it should be replaced with a Group 2 Joint that will accommodate the same calculated movement.

| **Modification for Non-Conventional Projects:** |
| --- |
| Delete ***SDG*** 6.4.5 and see the RFP for requirements. |

### 6.4.6 Post Tensioned Bridges

See ***SDG*** 4.6.7 Expansion Joints.

## 6.5 BEARINGS (Rev. 01/17)

A. Bridge bearings must accommodate the movements of the superstructure and transmit loads to the substructure supports. The type of bearing depends upon the amount and type of movement as well as the magnitude of the load.

B. In general, simple-span, prestressed concrete beams, simple-span steel girders, and some continuous beams can be supported on composite neoprene bearing pads (elastomeric bearings). Larger longitudinal movements can be accommodated by using PTFE polytetrafluoroethylene (Teflon) bearing surfaces on external steel load plates.

C. Structures with large bearing loads and/or multi-directional movement might require other bearing devices such as pot, spherical, or disc bearings.

D. For cast-in-place flat slab superstructures, use unreinforced bearing strips with a minimum thickness of ¾". Bearing strips must extend the full width of the bridge and may be continuous for their full length or may be a series of discontinuous segments 5 feet or longer placed end to end. For prestressed slab beams or units, use individual unreinforced bearing strips or pads with a minimum thickness of 1".

E. For steel bridge bearings refer to AASHTO/NSBA Steel Collaboration Standard G9.1-2004 ***Guidelines for Steel Bridge Bearing Design and Detailing***. http://www.steelbridges.org/

F. Uplift restraints are undesirable and should only be considered when all other alternatives have been evaluated and only when approved by the SDO.

G. For segmental box bridges, provide a minimum of two bearings at the end of a unit or at the abutment.

H. Uplift on all bearing types is undesirable at Service and Strength Limit States, and requires SDO approval. The erection sequence shown in the plans must provide a statically stable support system that ensures the bearings are in compression for all construction load combinations. Uplift on reinforced elastomeric bearings, without bonded top and/or bottom load plates during construction, shall be limited and approved by the SDO on a case-by-case basis. For curved segmental bridges constructed in balanced cantilever, temporary bearing uplift may be avoided through the use of counterweights or tie-downs. See also ***SDM*** 20.9.1.

### 6.5.1 Design (Rev. 01/17)

A. For bridge bearings specify composite elastomeric bearing pads and other bearing devices that have been designed in accordance with ***LRFD*** Method B, the ***Specifications***, and this document. Specify elastomeric bridge bearing pads by thickness, area, lamination requirement and shear modulus. For normal applications, specify a shear modulus of either 0.110 ksi, 0.130 ksi or 0.150 ksi (at 73 degrees F). For unusual applications, the shear modulus may vary from 0.095 to 0.2 ksi (at 73 degrees F). Do not apply the 1.20 load factor in ***LRFD*** [Table 3.4.1-1] to the thermal movements (TU) for elastomeric bearing pad design when using ***LRFD*** Method B to determine the total shear deformation in each direction per ***LRFD*** [14.7.5.3.2]. Include the effects of Dynamic Load Allowance for Live Load.

B. For ancillary structures (noise walls, pedestrian or traffic railings, etc.) and plain elastomeric bearings as typically used on flat-slab bridges and for other applications, design pads in accordance with ***LRFD*** Method A, and specify by thickness, area (length and width), and hardness (durometer) or shear modulus (G).

C. Whenever possible, and after confirming their adequacy, standard designs should be used. See ***Design Standards*** Index 20510 and the associated ***Instructions for Design Standards (IDS)***, for standard composite elastomeric bearing pads. Only when the neoprene capacities of the standard pads have been exceeded or when site

conditions or constraints dictate provisions for special designs (such as multi-rotational capability) should other bearing systems or components be considered. If other bearing systems or components are considered, the bearing types must be selected based on a suitability analysis. Comply with ***LRFD*** [Table 14.6.2-1], Bearing Suitability, to select an appropriate bearing type. The special design requirements of ***LRFD*** covers specific material properties, mating surfaces, and design requirements such as coefficient of friction, load resistance, compressive stress, compressive deflection, and shear deformation, as applicable to the various bearing systems.

*Commentary: If the resistance factor for a bearing is other than 1.0, the design calculations must include the method for obtaining such a factor.*

D. For elastomeric bearing pads, use the following criteria to establish bearing seat (pedestal) geometry and usage of beveled bearing plates considering beam grade, camber and skew effects.

1. For beam grades less than 0.5%, show bearing seats to be finished level and do not use beveled bearing plates.
2. For beam grades between 0.5% and 2%, show bearing seats to be finished parallel to the underside of the beam and do not use beveled bearing plates.
3. For beam grades greater than 2%, show bearing seats to be finished level and use beveled bearing plates.
4. Use transversely beveled or compound beveled bearing plates or bearing seats for all transversely sloped bearing conditions when the change in elevation across the width of the bearing pad is greater than or equal to 1/8 inch. Do not use a combination of level bearing seats and shims in lieu of sloped bearing seats.
5. When possible, bearing seats at each end of the beam should have the same slope.
6. When using FIBs with standard bearing pads which meet the requirements above, the beam end rotations due to beam camber (at 120 days) and deflection may be neglected if the combined effect is less than 0.0125 radians (1.25%).

*Commentary: The effects of static rotation (beam camber and dead load rotation) are not considered critical due to the propensity of the neoprene to creep over time and redistribute internal stresses. Additionally, inherent inaccuracies in the estimation of beam cambers and the compensating effects of dead load and live load rotations generally do not warrant refinement in the calculation of beam seat slopes.*

*In lieu of a refined analysis, the rotation at the end of simple span prestressed beams from camber, dead load or live load deflection may be calculated using the following equation:*

$$\text{Rotation} = 4\,(y_{mid} / L)$$

*Where:*

| | | |
|---|---|---|
| *Rotation* | = | *Rotation at end of beam (radians)* |
| $y_{mid}$ | = | *Deflection at mid span (inches)* |
| $L$ | = | *Span length between centerline of bearing (inches)* |

### 6.5.2 Maintainability

A. The following provisions apply to all bridges with the exception of flat slab superstructures (cast-in-place or precast):

   1. Design and detail superstructure using bridge bearings that are reasonably accessible for inspection and maintenance.

   2. On all new designs make provisions for the replacement of bearings without causing undue damage to the structure and without having to remove anchorages or other devices permanently attached to the structure.

   3. Design and detail provisions for the removal of bearings, such as jacking locations, jacking sequence, jack load, etc. Verify that the substructure width is sized to accommodate the jacks and any other required provisions. Simple span pretensioned beams are exempt from this requirement.

B. Certain non-conventional structures, such as steel girders or segmental concrete box girders, require separate details and notes describing jacking procedures. For steel I-girder bridges, design so that jacks are placed directly under girder lines. For steel box girder bridges, design so that jacks are placed directly under diaphragms. Always include a plan note stating that the jacking equipment is not part of the bridge contract.

*Commentary: Few concrete I-beam bridges have required elastomeric bearing pad replacement. Occasional replacement of these pads does not justify requiring these provisions for every bridge.*

### 6.5.3 Lateral Restraint

Determine if lateral restraint of the superstructure of a bridge is required and make necessary provisions to assure that the bridge will function as intended. These provisions include considerations for the effects of geometry, creep, shrinkage, temperature, and/or seismic on the structure. When lateral restraint of the superstructure is required, develop the appropriate method of restraint as described hereinafter.

A. Elastomeric Bearings: When the required restraint exceeds the capacity of the bearing pad, the following appropriate restraint must be provided:

   1. For concrete girder superstructures, provide concrete blocks cast on the substructure and positioned to not interfere with bearing pad replacement.

   2. For steel girder superstructures, provide extended sole plates and anchor bolts or rods.

B. Mechanically Restrained Bearings: Bearings that provide restraint through guide bars or pintles (e.g., pot bearings), must be designed to provide the required lateral restraint. When unidirectional restraints are required, avoid multiple permanent unidirectional restraints at a given pier location to eliminate binding. Where multiple unidirectional restraints are necessary at a given pier, require bearings with external guide bars that are adjustable and include a detailed installation procedure in the plans or specifications that ensure that the guide bars are installed parallel to each other.

## 6.6 DECK DRAINAGE [2.6.6]

See ***SDM*** Chapter 22 for drainage requirements on bridges.

## 6.7 TRAFFIC RAILING [13.7]

### 6.7.1 General (Rev. 01/17)

A. Unless otherwise approved, all new bridge, approach slab and retaining wall mounted traffic railings, traffic railing/noise wall combinations and traffic railing/glare screen combinations proposed for use in new or temporary construction, resurfacing, restoration, rehabilitation (RRR) and widening projects must:

1. Projects let prior to July 1, 2018:
   Have been successfully crash tested to Test Level 4 (minimum), Test Level 5 or Test Level 6 criteria (as appropriate) in accordance with ***LRFD*** and either ***National Cooperative Highway Research Program (NCHRP) Report 350*** or ***Manual for Assessing Safety Hardware (MASH)*** for permanent installations.

   Projects let July 1, 2018 and later:
   Have been successfully crash tested to Test Level 4 (minimum), Test Level 5 or Test Level 6 criteria (as appropriate) in accordance with ***LRFD*** and ***Manual for Assessing Safety Hardware (MASH)*** for permanent installations.

2. Projects let prior to July 1, 2018:
   Have been successfully crash tested to Test Level 3 (minimum) in accordance with ***LRFD*** and either ***NCHRP Report 350*** or ***MASH*** for temporary installations shielding drop-offs.

   Projects let July 1, 2018 and later:
   Have been successfully crash tested to Test Level 3 (minimum) in accordance with ***LRFD*** and ***MASH*** for temporary installations shielding drop-offs.

3. Projects let prior to July 1, 2018:
   Have been successfully crash tested to Test Level 2 (minimum) in accordance with ***LRFD*** and either ***NCHRP Report 350*** or ***MASH*** for temporary installations shielding work zones without drop-offs (45 mph or less design speed).

   Projects let July 1, 2018 and later:
   Have been successfully crash tested to Test Level 2 (minimum) in accordance with ***LRFD*** and ***MASH*** for temporary installations shielding work zones without drop-offs (45 mph or less design speed).

**Modification for Non-Conventional Projects:**

Delete ***SDG*** 6.7.1.A Paragraphs 1, 2 and 3 and insert the following:

1. Have been successfully crash tested to Test Level 4 (minimum), Test Level 5 or Test Level 6 criteria (as appropriate) in accordance with ***LRFD*** and ***Manual for Assessing Safety Hardware (MASH)*** for permanent installations.
2. Have been successfully crash tested to Test Level 3 (minimum) in accordance with ***LRFD*** and ***MASH*** for temporary installations shielding drop-offs.
3. Have been successfully crash tested to Test Level 2 (minimum) in accordance with ***LRFD*** and ***MASH*** for temporary installations shielding work zones without drop-offs (45 mph or less design speed).

4. Meet the appropriate strength and geometric requirements of ***LRFD*** [13] for the given test levels and crash test criteria.
5. Be upgraded on both sides of a structure when widening work is proposed for only one side and the existing traffic railing on the non-widened side does not meet the criteria for new traffic railings or the requirements of Section 6.7.1.C below.
6. Be constructed on decks reinforced in accordance with ***SDG*** Chapter 4 for permanent installations on new construction, widenings and partial deck replacements.
7. Be constructed on decks and walls meeting the requirements of Section 6.7.4 for retrofit construction.
8. Be constructed and installed in accordance with the crash tested and accepted details for temporary installations.

B. The traffic railings shown on ***Design Standards*** Indexes 420-425, 470-483, 5200 and 5212 have been determined to meet the ***NCHRP Report 350*** crashworthiness requirements for permanent installations as listed above. The traffic railings shown on ***Design Standards*** Indexes 426, 427 and 428 have been determined to meet the ***MASH*** crashworthiness requirements for permanent installations as listed above. Use these standard traffic railings for permanent installations on bridges and retaining walls as shown in ***PPM***, Volume 1 unless approval to use a non-standard or modified traffic railing is obtained per ***SDG*** 6.7.2. The traffic railings shown on ***Design Standards*** Indexes 412 and 414 have been determined to meet the crashworthiness requirements for temporary installations as listed above. Use these standard traffic railings for temporary installations on bridges and retaining walls as shown on the standards.

C. Evaluate existing installations of superseded FDOT Standard Traffic Railings and supporting bridge decks, wing walls and retaining walls as follows:

1. All superseded FDOT Standard Traffic Railings shown in the ***Instructions for Design Standards (IDS)***. Index 402, “A Historical Compilation of Superseded Florida Department of Transportation ‘Structures Standard Drawings’ for ‘F’ and ‘New Jersey’ Shape Structure Mounted Traffic Railings” are both structurally and

functionally adequate. Refer to these drawings for information on existing "New Jersey Shape" and "F Shape" Traffic Railings.

2. Existing bridge decks, wing walls and retaining walls supporting traffic railings referenced in C.1 are considered to be both structurally and functionally adequate for resisting vehicular impact loads.
3. Traffic railings and existing bridge decks, wing walls and retaining walls referenced in C.1 and C.2 do not require a Design Variation for vehicular impact loads.

| **Modification for Non-Conventional Projects:** |
| --- |
| Delete ***SDG*** 6.7.1.C and see the RFP for requirements. |

D. See ***SDG*** 1.6 for restrictions on the use of Post-Installed Anchor Systems with traffic railings.

E. Do not use weathering steel guardrail.

F. A maximum of two 2" diameter conduits are permitted in concrete traffic railings other than ***Design Standards*** Index 424, Index 480 Series, Index 5210 and Index 5211. Conduits are not permitted in ***Design Standards*** Index 424, Index 480 Series, Index 5210 and Index 5211 traffic railings. Provide conduits in concrete traffic railings as permitted unless otherwise directed by the District to not include conduits. Where bridges are constructed immediately adjacent to each other and back-to-back traffic railings are utilized, conduits may be omitted from one of the back-to-back traffic railings unless otherwise directed by the District.

## 6.7.2 Non-Standard or New Railing Designs

A. The use of a non-FDOT standard or new structure mounted traffic railing requires the prior approval of the Structures Design Office. Proposed modifications to standard traffic railings also require prior Structures Design Office approval. Such proposed modifications may include but are not limited to reinforcement details, surface treatments, material substitutions, geometric discontinuities along the length of the railing, non-standardized attachments that do not meet the requirements of ***SDG*** 1.9, non-standardized and unfilled pockets or blockouts, end transition details and traffic face geometry.

B. Submit all proposed non-FDOT standard, new or modified structure mounted traffic railing designs to the Structures Design Office for review and possible approval. Make this submittal early in the design process preferably prior to submittal of the Typical Section Package.

| Modification for Non-Conventional Projects: |
| --- |
| Delete ***SDG*** 6.7.2.B and insert the following:<br>B. Submit all proposed non-FDOT standard, new or modified structure mounted traffic railing designs to the Structures Design Office for review and possible approval. |

C. A non-FDOT standard or new structure mounted traffic railing design may be approved by the Structures Design Office if it meets the requirements of No. 1 and Nos. 2, 3 or 4 below:

1. The Structures Design Office has determined that the design will provide durability, constructability, maintainability and behavior under ultimate loading conditions equivalent to the standard FDOT traffic railing designs.
2. It has been successfully crash tested in accordance with ***NCHRP Report 350*** or ***MASH*** Test Level 4 (minimum) criteria for permanent installations and Test Level 2 or 3 criteria (as appropriate) for temporary installations.
3. It has been approved for specific uses by FHWA after evaluation of results from successful crash testing based on criteria that predate ***NCHRP Report 350*** or ***MASH*** Test Levels 2, 3 and 4 (as appropriate).
4. It has been evaluated by the Structures Design Office and identified as similar in strength and geometry to another traffic railing that has been successfully crash tested in accordance with ***NCHRP Report 350*** or ***MASH*** Test Level 4 (minimum) criteria for permanent installations and Test Level 2 or 3 criteria (as appropriate) for temporary installations.

*Commentary: The background for this policy is based on the Test Level Selection Criteria as defined in **LRFD** [13] and on historical construction costs and in-service performance of standard FDOT Test Level 4 traffic railings used in permanent installations. This background can be summarized as follows:*

*1. In general, a greater potential exists for overtopping or penetrating a shorter height, lower test level traffic railing versus a similarly shaped Test Level 4 traffic railing. This potential is further aggravated on tall bridges and on bridges over intersecting roadways or water deep enough to submerge an errant vehicle. Vehicle performance during higher speed impacts is also more critical on lower test level traffic railings.*

*2. Little construction cost savings can be realized by using a lower test level traffic railing. In some cases, particularly with the more elaborate or ornate traffic railing designs, initial construction costs and long term repair and maintenance costs could actually be greater than those for a standard FDOT Test Level 4 design.*

*3. Aesthetically pleasing and open Test Level 4 designs are available for use where appropriate.*

*4. On bridges and retaining walls with sidewalks where special aesthetic treatments are desired or required, the use of an aesthetic pedestrian railing located behind a Test Level 4 traffic railing is a more appropriate solution. The aesthetics of the traffic railing should complement the pedestrian railing.*

D. For more detailed information on FDOT structure mounted traffic railings, refer to the ***Design Standards***. For additional information about crash-tested traffic railings currently available or about traffic railings currently under design or evaluation, contact the Structures Design Office.

E. Use the traffic railing surface texture guidelines given below for the selection of proposed texturing of the traffic face of 32-inch and 42-inch Vertical Face Traffic Railings and the upper vertical portion of the Traffic Railing/Noise Wall combination. Maintain ***SDG*** 1.4 concrete cover requirements at the point of deepest relief. Modify standard concrete products to maintain the proper cover but do not modify the geometry of the traffic face of the railing.

1. Sandblasted textures covering the majority of the railing surface with a maximum relief of 3/8-inches.
2. Images or geometric patterns inset into the face of the railing 1-inch or less and having 45-degree or flatter chamfered or beveled edges to minimize vehicular sheet metal or wheel snagging.
3. Textures or patterns of any shape and length inset into the face of the railing up to 1/2-inch deep and 1-inch wide and having 60-degree or flatter chamfered or beveled edges to facilitate form removal.
4. Any texture or pattern with gradual undulations (e.g. cobblestone) that has a maximum relief of 3/4-inch over a distance of one foot.

F. Patterns or textures must be cast into or otherwise integral with the traffic face or top of traffic railings. Do not specify textures, patterns or features, e.g. brick, stone, or tile veneers, etc. on the traffic face or top of traffic railings that have to be attached as a separate element. Such features may be considered for attachment to the back face of traffic railings and pedestrian railings on a project by project basis in locations not over or directly beside other travelways.

*Commentary: The above guidelines for concrete railing texturing will not adversely affect the **NCHRP Report 350** or **MASH** test level of the railing to which a texture or pattern is applied. However, it is clear from crash test results that textured railings can result in more vehicular body damage in a crash due to increased friction even if crash performance remains within acceptable limits.*

*Aesthetic attachments to the back of the traffic railing may become dislodged when the railing is impacted and create a hazard to roadways located under or beside the structure. For this reason, aesthetic attachments shall not be used on the back of railings located over or directly beside other travelways. Railings with aesthetic features generally cannot be slip formed resulting in increased construction time and cost.*

*The selection of a proposed railing texture or pattern should take into account the overall aesthetic concept of the structure, maintainability of the feature and the long service of the structure. Shapes of traffic railings create the major aesthetic impression, colors, textures, and patterns are secondary. Form liners that try to imitate small scale detail are wasted at highway speeds but may be appropriate for areas with pedestrian traffic.*

### 6.7.3 FHWA Policy (Rev. 01/17)

FHWA bridge traffic railing policy can be found at the following website:

http://safety.fhwa.dot.gov/roadway_dept/policy_guide/road_hardware/

The AASHTO/FHWA Joint Implementation Agreement for ***MASH***, the Federal-aid reimbursement process for safety hardware devices, FHWA's crash test laboratory accreditation requirements and lists of crashworthy hardware can also be found on this website.

### 6.7.4 Existing Obsolete Traffic Railings (Rev. 01/17)

A. General

1. FDOT promotes highway planning that replaces or upgrades non-crash tested traffic railing on existing bridges to current standards, or that at least increases the strength or expected crash performance of these traffic railings. FDOT has developed two sets of ***Design Standards***, Index 470 and 480 Series, for retrofitting existing structures with traffic railing types that have performed well in crash tests and are reasonably economic to install. Detailed instructions and procedures for retrofitting obsolete traffic railings on existing structures using ***Design Standards*** Index 470 and 480 Series are included in the ***Instructions for Design Standards (IDS)***.
2. For RRR projects, existing bridge traffic railing retrofits constructed in accordance with 1987 through 2000 ***Design Standards***, Index 401, Schemes 1 and 19 Concrete Safety Barrier may be left in place provided they meet the criteria set forth in the ***PPM***, Volume 1, Chapter 4.
3. When rehabilitation or renovation work is proposed on an existing structure with traffic railings that do not meet the criteria for new or existing railings as provided above, replace or retrofit the existing traffic railings to meet the crash-worthy criteria unless a Design Variation is approved. Refer to Chapter 23 of the ***PPM***, Volume 1, for information about variations.

| **Modification for Non-Conventional Projects:** |
| --- |
| Delete ***SDG*** 6.7.4.A.2 and ***SDG*** 6.7.4.A.3 and see the RFP for requirements. |

*Commentary: The obsolete standard entitled Guardrail Anchorage and Continuous Barrier for Existing Bridges, Index 401, was included in the **Design Standards** from 1987 until 2000. Schemes 1 and 19 of this standard entitled Concrete Safety Barrier are based on a design that has been crash tested as documented in **Transportation Research Report TRP-03-19-90** and accepted by FHWA at **NCHRP Report 350** Test Level 4.*

B. FHWA Policy on Existing Traffic Railings

See ***SDG*** 6.7.3.

C. Traffic Railing Retrofit Concepts and Standards

Existing non-crash tested traffic railings designed in accordance with past editions of the AASHO and ***AASHTO Standard Specifications for Highway Bridges*** will likely not meet current crash test requirements and will also likely not meet the strength and height requirements of ***LRFD***. The retrofitting of these existing non-crash tested traffic railings reduces the separate but related potentials for vehicle snagging, vaulting and/or penetration that can be associated with many obsolete, non-crash tested designs.

The Thrie Beam Guardrail Retrofit and Vertical Face Retrofit ***Design Standards***, Index 470 and 480 Series, respectively, are suitable for retrofitting specific types of obsolete structure mounted traffic railings. These retrofits provide a more economical solution for upgrading obsolete traffic railings when compared with replacing the obsolete traffic railings and portions of the existing bridge decks or walls that support them. As these retrofits do not provide for any increase in clear width of roadway, and in a few cases decrease clear width by approximately 2 inches, they should only be considered for use on structures where adequate lane and shoulder widths, sight distances and transition lengths are present. The potential effects of installing a retrofit should be evaluated to ensure that the accident rate will not increase as a result. Detailed guidance and instructions on the design, plans preparation requirements and use of these retrofits is included in the ***Instructions for Design Standards (IDS)***.

When selecting a retrofit or replacement traffic railing for a structure that will be widened or rehabilitated, or for a structure that is located within the limits of a RRR project, evaluate the following aspects of the project:

1. Elements of the structure.
    a. Width, alignment and grade of roadway along structure.
    b. Type, aesthetics, and strength of existing railing.
    c. Structure length.
    d. Potential for posting speed limits in the vicinity of the structure.
    e. Potential for establishing no-passing zones in the vicinity of the structure.
    f. Approach and trailing end treatments (guardrail, crash cushion or rigid shoulder barrier).
    g. Strength of supporting bridge deck or wall.
    h. Load rating of existing bridge.
2. Characteristics of the structure location
    a. Position of adjacent streets and their average daily traffic.
    b. Structure height above lower terrain or waterway.
    c. Approach roadways width, alignment and grade.
    d. Design speed, posted speed, average daily traffic and percentage of truck traffic.

e. Accident history on the structure.

f. Traffic control required for initial construction of retrofit and for potential future repairs.

g. Locations and characteristics of pedestrian facilities / features (if present).

3. Features of the retrofit designs

a. Placement or spacing of anchor bolts, rods or dowels.

b. Reinforcement anchorage and potential conflicts with existing reinforcement, voids, conduits, etc.

c. Self weight of retrofit railing.

d. End treatments.

e. Effects on pedestrian facilities.

D. Evaluation of Existing Supporting Structure Strength for Traffic Railing Retrofits.

The Thrie Beam Guardrail and Vertical Face traffic railing retrofits are based on designs that have been successfully crash tested in accordance with ***NCHRP Report 350*** to Test Level 4 or have been previously tested and then accepted at Test Level 4. The original designs have been modified for use with some of the wide variety of traffic railings and supporting deck and wing wall configurations that were historically constructed on Florida bridges. In recognition of the fact that the traffic railings and supporting elements were designed to meet the less demanding requirements of past AASHO and AASHTO Bridge Specifications, modifications have been made to the original retrofit designs in order to provide for better distribution of vehicle impact force through the traffic railing retrofit and into the supporting bridge deck or wing wall. For Thrie Beam Guardrail Retrofit installations on narrow curbs and or lightly reinforced decks or walls, a smaller post spacing is used on bridge decks. In addition, through-bolted anchors are used for some Thrie Beam Guardrail Retrofit installations. For the Vertical Face Retrofit, additional longitudinal reinforcing steel and dowel bars at the open joints are used within the new railing.

Existing bridge decks and walls that will support a traffic railing retrofit must be evaluated to determine if sufficient strength is available to ensure that the retrofit will perform in a manner equivalent to that demonstrated by crash testing. Existing structures may contain Grade 33 reinforcing steel if constructed prior to 1952 or Grade 40 reinforcing steel if constructed prior to 1972. Use 90% of the ultimate tensile strength of these materials when determining the existing capacity for both tension and moment from traffic railing impacts ($\mathbf{f_s}$ = 49.5 ksi for Grade 33, $\mathbf{f_s}$ = 60 ksi for Grade 40). For existing structures containing Grade 60 reinforcing steel, only use the yield strength of this material ($\mathbf{f_s}$ = 60 ksi). For bridges with varying spacings and sizes of transverse reinforcing steel in the deck or curb, the average area of transverse steel for the span may be used.

Existing cast-in-place reinforced concrete bridge decks shall be analyzed at a section through the deck at the gutter line for the appropriate FDOT traffic railing retrofit Standard Indexes using the following design values:

| Traffic Railing Type | Design Standards Index No. | $M_g$ | $T_u$ |
|---|---|---|---|
| Thrie-Beam Retrofit | 471,475, & 476 | 5.8 | 4.7 |
| Thrie-Beam Retrofit | 472 & 474 | 8.3 | 6.7 |
| Thrie-Beam Retrofit | 473 | 9.7 | 7.9 |
| Vertical-Face Retrofit | 481-483 | 12.9 | 7.5 |

$\mathbf{M_g}$ (kip-ft/ft) - Ultimate deck moment at the gutter line from the traffic railing impact.

$\mathbf{T_u}$ (kip/ft) - Total ultimate tensile force to be resisted.

The following relationship must be satisfied at the gutter line:

$$(T_u / \phi P_n) + (M_u / \phi M_n) \leq 1.0 \qquad \text{[Eq. 6-2]}$$

Where:

$\phi$ = 1.0

$\mathbf{P_n} = \mathbf{A_s f_s}$ (kips/ft) - Nominal tensile resistance based on the areas of transverse reinforcing steel in both the top and bottom layers of the deck ($\mathbf{A_s}$) and the nominal reinforcing steel strength ($\mathbf{f_s}$). This reinforcing steel must be fully developed at the critical section through the deck at the gutter line.

$\mathbf{M_u}$ = Total ultimate deck moment from traffic railing impact and factored dead load at the gutter line. ($\mathbf{M_g + 1.00 * M_{Dead\ Load}}$) (kip/ft/ft).

$\mathbf{M_n}$ = Nominal moment resistance at the gutter line determined by traditional rational methods for reinforced concrete (kip-ft/ft). The bottom layer of steel must not be included unless a strain compatibility analysis is performed to determine the steel stress in this layer with the compressive strain in the concrete limited to 0.003.

Flat slab bridge decks constructed with only a bottom mat of reinforcing must be evaluated using Eq. 6-1 with the following parameters redefined for structural plain concrete resistance:

$\phi$ = 0.67

$\mathbf{P_n} = \mathbf{A_g f_t}$ (kips/ft) - Nominal tensile resistance based on the gross cross sectional area of concrete ($\mathbf{A_g}$) and the nominal concrete tensile resistance ($\mathbf{f_t}$=0.158$\sqrt{\mathbf{f'_c}}$).

$\mathbf{M_n} = \mathbf{S_m f_t}$(kip-ft/ft) - Nominal moment resistance at the gutter line determined using the elastic section modulus ($\mathbf{S_m}$) with the nominal concrete tensile resistance ($\mathbf{f_t}$). The bottom layer of steel reinforcing must not be included in the analysis.

*Commentary: This type of flat slab deck was typically constructed for very short span bridges in Florida before the 1950's. Although tensile strength of concrete has traditionally been neglected in Strength Limit State design it is acceptable for analysis of these types of existing structures at the Extreme Event II Limit State. The equations for flexural resistance are based on ACI-318 for structural plain concrete with a modified resistance factor value based on the same ratio of Extreme Event/ Strength Limit State used for reinforced concrete in **LRFD** (0.67 = 0.6*1.00/0.90).*

Decks constructed of longitudinally prestressed, transversely post-tensioned voided or solid slab units generally only contain minimal transverse reinforcing ties. Retrofitting bridges with this type of deck requires approval from the State Structures Design Engineer. For these type bridges, the strength checks of the deck at the gutter line will not be required. Only ***Design Standards*** 475 or 480 series retrofits should be used to retrofit these bridges.

In addition to checking the existing deck capacity at the gutter line, the following minimum areas of reinforcing steel per longitudinal foot of span must also be satisfied unless a more refined analysis is performed to justify a lesser area of steel at these locations:

| **Minimum Steel Area ($in^2$/ft) for Design Standards Index No.** | | | | | |
|---|---|---|---|---|---|
| **Reinforcing Steel Location** | **Grade** | **471,475 & 476** | **472 & 474** | **473** | **481 - 483** |
| Transverse in top of curb beneath post | 33 | 0.32 | 0.4 | 0.4 | NA |
| | 40 & 60 | 0.25 | 0.31 | 0.31 | NA |
| Vertical in face of curb for thickness "**D**" | 33 | 0.2 | 2.25/(D-2)[1] | 2.65/(D-2)[1] | 3.30/(D-2)[1] |
| | 40 & 60 | 0.20[2] | 1.80/(D-2)[1] | 2.10/(D-2)[1] | 2.60/(D-2)[1] |

1 Minimum area of reinforcing steel must not be less than 0.16 square inches/foot. Where: **D** (inches) = Horizontal thickness of the curb at the gutter line.

2 0.16 sq inches/foot is acceptable for **D** equal to or greater than 15-inches.

If the minimum areas of reinforcing in the curb given above are not satisfied, the following design values may be used for a refined analysis of the existing curb beneath the post for the Design Standards Index 470 Series retrofits:

| **Traffic Railing Type** | **Design Index No.** | **$M_p$** | **$T_u$** |
|---|---|---|---|
| Thrie-Beam Retrofit | 471, 475 & 476 | 9.7 | 7.9 |
| Thrie-Beam Retrofit | 472, 473, & 474 | 12 | 9.9 |

**$M_p$** (kip-ft/ft) - Ultimate deck moment in the curb at centerline of post from the traffic railing impact.

**$T_u$** (kip/ft) - Total ultimate tensile force to be resisted.

The following relationship must be satisfied in the curb at centerline of post:

$$(\mathbf{T_u}/\phi\mathbf{P_n}) + (\mathbf{M_u}/\phi\mathbf{M_n}) \leq \mathbf{1.0} \qquad \text{[Eq. 6-3]}$$

Where:

$\phi$ = 1.0

$\mathbf{P_n} = \mathbf{A_s f_s}$ (kips/ft) - Nominal tensile capacity based on the areas of transverse reinforcing steel in both the top and bottom layers of the deck ($\mathbf{A_s}$) and the nominal reinforcing steel strength ($\mathbf{f_s}$). This reinforcing steel must be fully developed at the critical section.

$\mathbf{M_u}$ = Total ultimate deck moment in the curb from traffic railing impact and factored dead load at centerline of post ($\mathbf{M_p + 1.00 * M_{Dead\ Load}}$) (kip/ft/ft).

$\mathbf{M_n}$ = Nominal moment capacity of the curb at centerline of post determined by traditional rational methods for reinforced concrete (kip-ft/ft). The bottom layer of steel in the curb must not be included unless a strain compatibility analysis is performed to determine the steel stress in this layer with the compressive strain in the concrete limited to 0.003.

The ultimate moment capacity of existing wing walls and retaining walls supporting the traffic railing retrofits must not be less than 9.7 kip-ft/ft for Index 470 Series retrofits (3'-1½" maximum post spacing) and 12.0 kip-ft/ft for Index 480 Series retrofits. Wing walls for Index 480 Series retrofits must also be a minimum of 5 feet in length and pile supported. For Index 480 Series retrofits only, wing walls that do not meet these criteria must not be used to anchor the ends of guardrail transitions and must be shielded by continuous guardrail as shown on the ***Design Standards***. For both 470 and 480 Series retrofits, retaining walls must be continuous without joints for a minimum length of 10 feet and adequately supported to resist overturning.

A Design Variation will be required for bridges or components of bridges that do not meet the preceding strength requirements. The potential for damage to the existing bridge deck or wing walls due to a very severe crash, such as that modeled by full scale crash testing, may be acceptable in specific cases. Contact the Structures Design Office for additional guidance and assistance in these cases.

E. Evaluation of Existing Decks with Tall Barriers using Yield-Line Analysis.

When evaluating an existing deck with tall barriers such as Traffic Railing/Noise Walls (***Design Standards*** Index 5210 Series) using ***LRFD*** [A13.3.1] yield-line analysis, the following assumptions may be made:

- Impact within a Wall Segment - Distribute the impact force to the top of deck by a length $L_c$ + 2H along the base of the wall, centered around the impact location.
- Impact near End of Wall Segment - Distribute the impact force to the top of deck by a length $L_c$ + H beginning at the wall joint and extending along the base of the wall.

*Commentary: **LRFD** [A13.3.1] shows the impact force is acting at the top of the concrete wall. For tall barriers this may not be the case since the assumed impact height ($H_e$) may be much less than wall height (H). However, the approach shown is consistent with FDOT practice of determining the critical length ($L_c$) based on the full height (H) of the wall. The distribution length of the impact force at deck level is assumed to be a projection of 45° in both directions from the critical length ($L_c$) that is located at the top of the wall.*

## 6.7.5 Historic Bridges

A. Federal Law protects Historic Bridges and special attention is required for any rehabilitation or improvement of them. The Director of the Division of Historical Resources of the Florida Department of State serves as Florida's State Historic Preservation Officer (SHPO). The SHPO and FDOT are responsible for determining what effect any proposed project will have on a historic bridge. See the ***PPM***, Volume 1, Chapter 26.

B. Bridges that are designated historic or that are listed or eligible to be listed in the National Register of Historic Places present a special railing challenge because the appearance of the bridge may be protected even though the historic railing may not meet current standards. When a project is determined to involve a historically significant bridge, contact the Structures Design Office for assistance with evaluating the existing bridge railings.

C. Original railing on a historic bridge is not likely to meet:
   1. Current crash test requirements.
   2. Current standards for railing height (a minimum of 32-inches for Test Level 4) and for combination traffic and pedestrian railings.
   3. Current standards for combination traffic and pedestrian railings, e.g. a minimum height of 42-inches and the limit on the size of openings in the railing (small enough that a 6-inch diameter sphere cannot pass.)

D. Options for upgrading the railing on historic bridges usually include the following:
   1. Place an approved traffic railing inboard of the existing railing, leaving the existing railing in place. This is sometimes appropriate when a pedestrian walkway exists on or is planned for the bridge.
   2. Replace the existing railing with an approved, acceptable railing of similar appearance.
   3. Remove the current railing and incorporate it into a new acceptable railing. This may be appropriate in rare instances where an existing railing is especially decorative.
   4. Design a special railing to match the appearance of the existing railing. It may not be necessary to crash test the new railing if the geometry and calculated strength equal or exceed a crash tested traffic railing.

| **Modification for Non-Conventional Projects:** |
| --- |
| Delete ***SDG*** 6.7.5 and see the RFP for requirements. |

### 6.7.6 Requirements for Test Levels 5 and 6 [13.7.2]

A. Consider providing a traffic railing that meets the requirements of Test Levels 5 or 6 when any of the following conditions exist:

1. The volume of truck traffic is unusually high.
2. A vehicle penetrating or overtopping the traffic railing would cause high risk to the public or surrounding facilities.
3. The alignment is sharply curved with moderate to heavy truck traffic.

B. Contact the SDO for guidance if a Test Level 5 or 6 traffic railing is being considered.

| **Modification for Non-Conventional Projects:** |
|---|
| Delete ***SDG*** 6.7.6 and see the RFP for requirements. |

### 6.7.7 Design Variation

A. In the rare event that an upgrade to the traffic railing on an existing bridge could degrade rather than improve bridge safety, during the early phases of a project consult the Structures Design Office about a possible Design Variation.

B. Factors to consider include the following:

1. Remaining time until scheduled replacement or major rehabilitation of structure.
2. Design speed and operating speed of traffic in the structure location, preferably no greater than 45 mph.
3. Resistance to impact of the existing railing.
4. Whether the structure ends are intersections protected by stop signs or traffic signals.
5. Whether the geometry is straight into, along and out of the structure.
6. Overall length of the structure.
7. Whether traffic on the structure is one-way or two-way.
8. Accident history on the structure, including damages to and repairs of the existing railing.
9. Risk of fall over the side of the structure.
10. Whether the bridge has an intersecting roadway or railroad track below.
11. Whether a railing upgrade will further narrow an already narrow lane, shoulder or sidewalk.
12. Load rating of the existing bridge.
13. Special historic or aesthetic concerns.

C. Deviations from the requirements of this Article must be approved in accordance with Chapter 23 of the ***PPM***, Volume 1.

| **Modification for Non-Conventional Projects:** |
|---|
| Delete ***SDG*** 6.7.7 and see the RFP for requirements. |

### 6.7.8 Miscellaneous Attachments to Traffic Railings

See ***PPM***, Volume 1, Chapter 4.

### 6.7.9 Impact Loads for Railing Systems with Footings or on Retaining Walls [13.7.3.1.2] (Rev. 01/17)

For sizing the moment slab for TL-3 and TL-4 traffic railings constructed with footings or on to top of retaining walls, use the following methodology.

A. Sliding of the Traffic Railing-Moment Slab

The factored nominal static sliding resistance ($\varphi R_n$) to sliding of the traffic railing-moment slab system along its base shall satisfy the following condition (see Figure 1):

$$\varphi R_n \geq \gamma F_{ts}$$

where:

$\varphi$ = resistance factor (0.8, ***LRFD*** [Table 10.5.5.2.2-1])

$R_n$ = nominal static sliding resistance (kips)

$\gamma$ = load factor (1.0, extreme event)

$F_{ts}$ = equivalent transverse static impact load (10 kips)

The nominal static sliding resistance ($R_n$) shall be calculated as:

$$R_n = W \tan \varphi_s$$

where:

W = weight of the monolithic section of traffic railing-moment slab between joints (with an upper limit of 60 ft) plus the weight of the traffic railing and any pavement or backfill material laying on top of the moment slab

$\varphi_s$ = friction angle of the soil–moment slab interface (°)

B. Overturning of the Traffic Railing-Moment Slab

The factored nominal static moment resistance ($\varphi M_n$) of the traffic railing–moment slab system to overturning shall satisfy the following condition (see Figure 1):

$$\varphi M_n \geq \gamma F_{ts} h_A$$

where:

$\varphi$ = resistance factor (0.9)

$M_n$ = nominal static sliding resistance (kips)

$\gamma$ = load factor (1.0, extreme event)

$F_{ts}$ = equivalent transverse static impact load (10 kips)

$h_A$ = moment arm taken as the vertical distance from the point of impact due to the dynamic force to the point of rotation A

The nominal static moment resistance $\mathbf{M_n}$ shall be calculated as:

$$\mathbf{M_n} = \mathbf{W}\, l_A$$

where:

W = weight of the monolithic section of traffic railing-moment slab between joints (with an upper limit of 60 ft) plus any pavement or backfill material laying on top of the moment slab

$l_A$ = horizontal distance from the center of gravity of the traffic railing-moment slab W to the point of rotation A

*Commentary: Research conducted as part of NCHRP Report 663, Design of Roadside Barrier Systems Placed on MSE Retaining Walls, concludes that a traffic railing–moment slab stability analysis using a 10 kip transverse static load provides for a sufficient design. The report also confirms that a 54 kip load is appropriate for the traffic railing structural capacity as recommended in* ***LRFD*** *[Section 13].*

**Figure 6.7.9-1 Traffic Railing-Moment Slab System (Sliding and Overturning)**

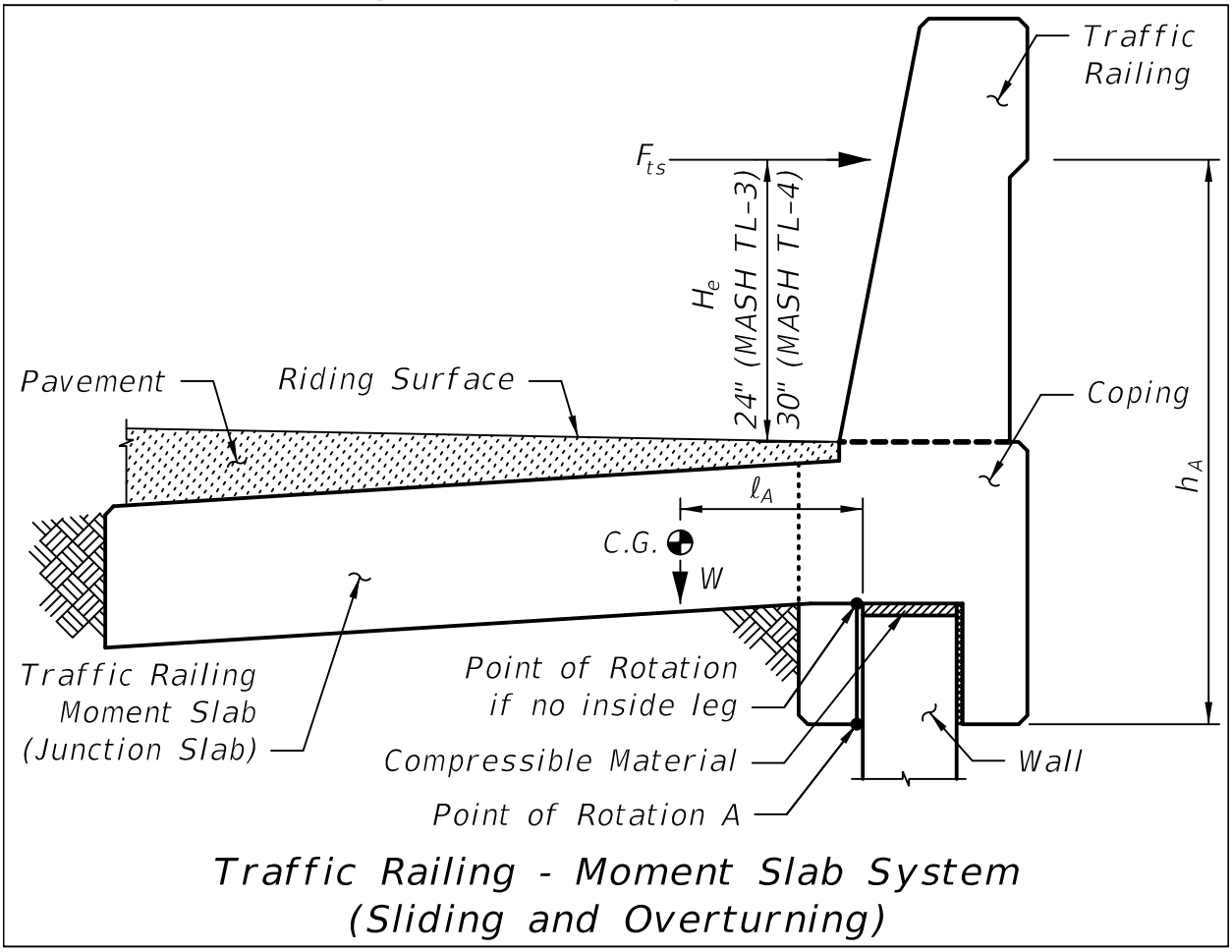

# 6.8 PEDESTRIAN AND BICYCLE RAILINGS [13.8 AND 13.9]

## 6.8.1 General

A. Design pedestrian and bicycle railings according to ***LRFD*** and this section.

B. Design ADA compliant handrails according to the ***ADA Standards for Transportation Facilities***, Section 505 (Handrails), the Florida Building Code and this section.

C. Design for a 75 year Design Life.

D. See ***PPM*** Volume 1, Chapter 8 for additional information.

## 6.8.2 Geometry (Rev. 01/17)

A. The standard height of pedestrian and bicycle railings is 42 inches. Utilize special height bicycle railings only where specifically called for in ***PPM*** Volume 1, Section 8.8.

B. For pedestrian railings without curbs or parapets that are installed on bridges over traffic, sidewalks, trails and waterways, the lowermost clear opening shall reject the passage of a 2 inch diameter sphere. For pedestrian railings without curbs or parapets that are installed on all other bridges and in other locations, the lowermost clear opening shall reject the passage of a 4 inch diameter sphere.

C. In addition to the ***LRFD*** clear opening requirements, for pedestrian railing installations subject to Florida Building Code provisions or other applicable Department owned installations as defined below, a 4 inch diameter sphere shall not pass through openings below a 42 inch height except as specified in the preceding paragraph for the lowermost opening. However, providing adequate sight distance always takes priority over providing smaller opening sizes that meet the 4 inch diameter sphere requirement. Examples of applicable locations include but are not limited to the following:

   1. Highway rest areas and travel information centers
   2. Parking garages
   3. Bridges and their approaches along shared-use paths
   4. View points on bridges where seating is provided
   5. Fishing piers or bridges where fishing is permitted along the sidewalk
   6. Adjacent to other public gathering areas with amenities (e.g. seating, interpretive displays, drinking fountains, etc.)

*Commentary: Pedestrian railings on bridges and other structures adjacent to sidewalks having standard widths generally do not have to meet the 4 inch sphere requirement.*

### 6.8.3 Design Live Loads

A. Top and Bottom Rails, Posts and Base Plates: per ***LRFD*** [13.8]

B. Handrails: per Florida Building Code

C. Pickets and Infill areas: Concentrated 200 lb. load applied transversely over an area of 1.0 square foot.

*Commentary: The use of this design load for pickets and infill areas is intended to result in a more vandal resistant design.*

### 6.8.4 Deflection

Total combined deflection of the pedestrian railing system including the resilient or neoprene pads, due to the top rail design live loads, shall not exceed 1.5 inches when measured at midspan of the top rail.

## 6.9 BRIDGES WITH SIDEWALKS OR TRAFFIC SEPARATORS

Design bridges with traffic separators or sidewalks located behind traffic railings for the governing of the following two cases:

1. The initial design configuration with traffic and pedestrian live load, and traffic railing, traffic separator and pedestrian railing dead loads present (as applicable), or,
2. The possible future case where the traffic separator or traffic railing between the travel lanes and the sidewalk is removed (as applicable), and vehicular traffic is placed over the entire deck surface (no pedestrian loads present).

*Commentary: In the future, the sidewalk or traffic separator could be simply eliminated in order to provide additional space to add a traffic lane. For bridges with sidewalks, two options are viable:*

*1. Construct a second traffic railing at the back of the sidewalk instead of a standard Pedestrian / Bicycle Railing as part of the original bridge construction. A vertical face traffic railing is preferred for this application if ADA compliant handrails are required due to the grade of the sidewalk. Design the cantilever within the sidewalk deck area to resist vehicle impact forces and wheel loads.*

*2. Construct a standard Pedestrian / Bicycle Railing as part of the original construction of the bridge and then demolish it and replace it with a traffic railing when necessary. If the deck cantilever is adequately reinforced to resist vehicle impact forces and wheel loads, only the railing needs to be replaced. Dowel the new vertical steel into the deck.*

## 6.10 ERECTION SCHEME AND BEAM/GIRDER STABILITY

A. For all bridges, investigate the stability of beams or girders subjected to wind loads during construction. For the evaluation of stability during construction use wind loads, limit states and temporary construction loads included in ***SDG*** 2.4, ***SDG*** 2.13 and ***LRFD***.

B. For pretensioned beams, see ***SDG*** 4.3.4.

C. For all steel girder, segmental beam or box girder bridges, and C.I.P. box girder bridges on falsework, include in the plans a workable erection scheme that addresses all major phases of erection. Investigate superstructure stability at all major phases of construction consistent with the erection scheme shown in the plans. Show required temporary support locations and associated loads assumed in design. Coordinate temporary support locations with the Temporary Traffic Control Plans. See ***PPM***, Volume 1, Chapter 10. Show maximum allowable vertical displacements of the temporary supports in the plans as required for fit up, alignment, and stability, or where excessive settlements would affect stresses of the permanent structure.

D. For curved spliced U-girders, if temporary supports are located only at the ends of segments, show the required service torsional and vertical reactions as well as maximum allowable vertical displacements at all temporary supports.

E. For information not included in the ***SDG*** or ***LRFD***, refer to the ***AASHTO Guide Design Specifications for Bridge Temporary Works*** and the ***AASHTO Construction Handbook for Bridge Temporary Works***.

*Commentary: The Contractor is responsible for evaluating the stability of individual components during erection. Shallow foundations for temporary supports may not be appropriate under certain circumstances due to the impacts of settlement on the permanent structure.*

# 7 WIDENING AND REHABILITATION

## 7.1 GENERAL

### 7.1.1 Load Rating

A. Before preparing widening or rehabilitation plans, review the inspection report and the existing load rating. If the existing load rating is inaccurate or was performed using an older method (e.g. Allowable Stress or Load Factor), perform a new ***LRFR*** load rating (***MBE*** Section 6, Part A) of the existing bridge in accordance with ***SDG*** 1.7. If any ***LRFR*** design inventory or any FL120 Permit rating factors are less than 1.0, calculate rating factors using ***LFR*** (***MBE*** Section 6, Part B). If any ***LRFR*** or ***LFR*** inventory load rating factors are less than 1.0, a revised load rating may be performed using one of the additional procedures in C.1, C.2, C.3, or C.4 to obtain a satisfactory rating. If any ***LFR*** inventory rating factors remain less than 1.0, replacement or strengthening is required unless a Design Variation is approved (see section B). Calculate ratings for all concrete box girders (segmental) using only ***LRFR*** (***MBE*** Section 6, Part A).

B. Design bridge widening or rehabilitation projects in accordance with ***SDG*** 7.3 and load rate in accordance with ***SDG*** 1.7. Do not isolate and evaluate the widened portion of the bridge separately from the rest of the bridge. After preparing widening or rehabilitation plans, if any ***LRFR*** design inventory or any FL 120 permit rating factors (***MBE*** Section 6, Part A) are less than 1.0, calculate rating factors using ***LFR*** (***MBE*** Section 6, Part B). If any ***LFR*** inventory rating factors remain less than 1.0, replacement or strengthening is required unless a Design Variation is approved. If any ***LRFR*** or ***LFR*** inventory load rating factors are less than 1.0, a revised load rating may be performed using one of the additional procedures in C.1, C.2, C.3, or C.4 to obtain a satisfactory rating.

C. Additional procedures may be performed to obtain a satisfactory inventory load rating. Only one of the following is allowed per rating factor.

   1. Approximate Method of Analysis: When using ***LRFD*** approximate methods of structural analysis and live load distribution factors, a rating factor of 0.95 may be rounded up to 1.0 for the existing portion of the bridge.

   2. Refined Method of Analysis: Refined methods of structural analyses (e.g. using finite elements) may be performed in order to establish an enhanced live load distribution factor and improved load rating. For continuous post-tensioned concrete bridges, a more sophisticated, time-dependent construction analysis is required to determine overall longitudinal effects from permanent loads.

   3. Service Limit State: If a Service Limit State rating factor is less than 1.0 and the current bridge inspection is showing no signs of either shear or flexural cracking, the capacity may be established using the Strength Limit State. Submit a Design Variation for a Service Limit State inventory load rating factor of less than 1.0 to the State Structures Design Engineer.

D. See Figure 7.1.1-1 for a flow chart of the widening/rehabilitation decision making process.

## Figure 7.1.1-1 Widening / Rehabilitation Load Rating Flow Chart

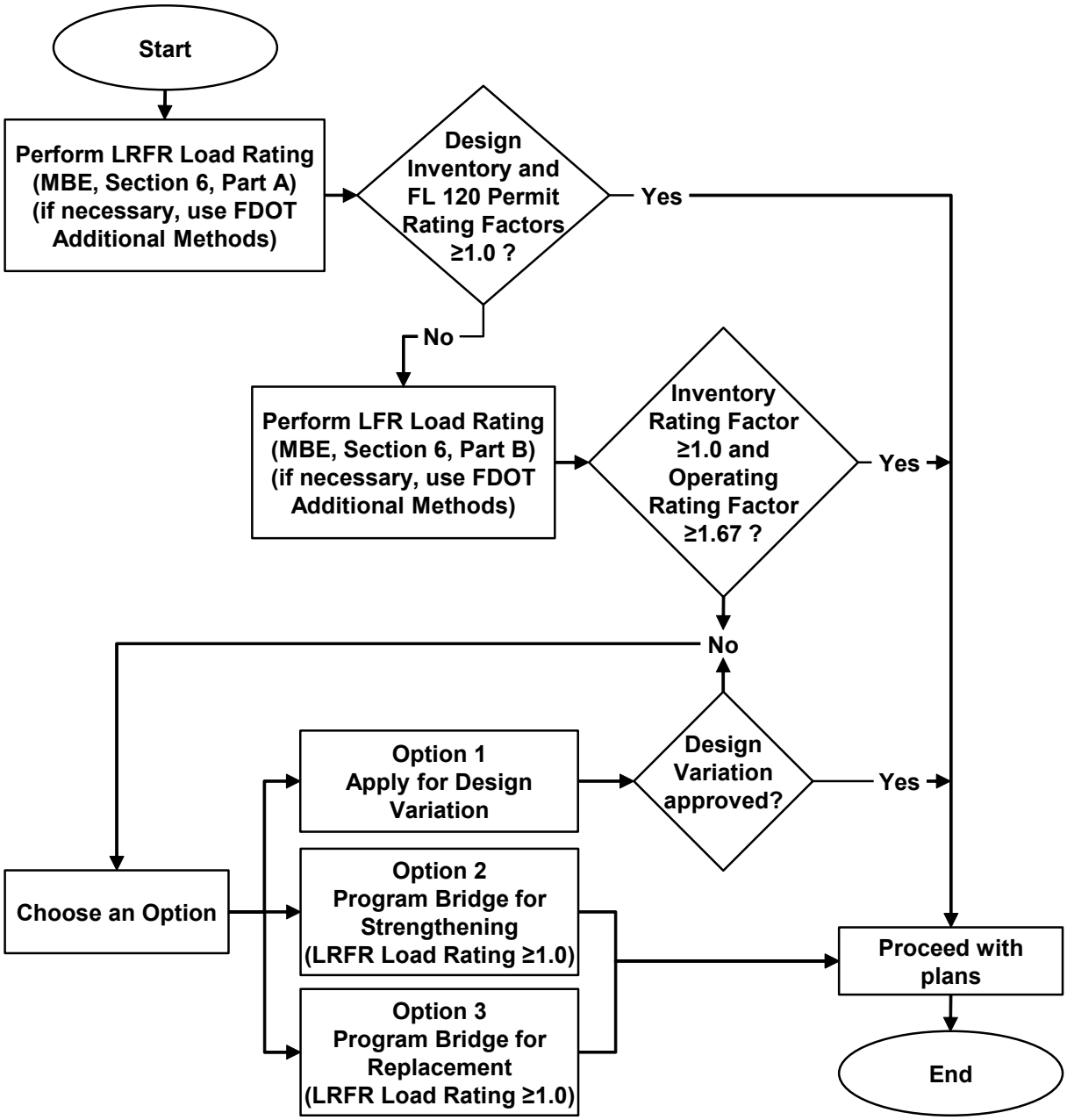


| **Modification for Non-Conventional Projects:** |
| --- |
| Delete ***SDG*** 7.1.1.A, ***SDG*** 7.1.1.B, ***SDG*** 7.1.1.C, ***SDG*** 7.1.1.D and Figure 7.1.1-1 and see the RFP for requirements. |

E. Use a consistent load rating method for the entire bridge and report the lowest controlling rating factor for each limit state. When evaluating the existing and widened portions of the completed bridge, report the lowest controlling rating factor and location.

*Commentary: Bridge widening and rehabilitation projects require major capital expenditures therefore it is appropriate to update existing bridges within the project to the current design specification. Because of heavy traffic and high volumes of overweight permit vehicles, Design Variations should be considered only for bridges off the National Highway System.*

### 7.1.2 Bridge Deck

A. Evaluate existing beam and girder supported decks for the temporary partially demolished condition.

B. For existing decks designed using the empirical deck design, and where the distance from the centerline of the exterior girder or exterior box web to the saw-cut line of the overhang is less than 5.0 times the existing deck thickness per ***LRFD*** [9.7.2.4], restrict traffic from the following locations:

- the first outer bay for I beam superstructures; or
- over the exterior beam for Florida-U Beam superstructures; or
- over the exterior box for steel box girder superstructures.

C. See also ***SDG*** Chapter 4.

### 7.1.3 Expansion Joints

See ***SDG*** Chapter 6.

### 7.1.4 Traffic Railing

See ***SDG*** Chapter 6.

### 7.1.5 Approach Slabs

Design and detail approach slabs in accordance with ***SDG*** 4.9 with the following exceptions:

A. The minimum approach slab length is 20 feet in lieu of 30 feet as shown in Figure 4.9-1.

B. Utilize an asphalt overlay only if the existing approach slab has an asphalt overlay.

### 7.1.6 Footings (Rev. 01/17)

When widening an existing bridge by attaching a new section of footing to an existing footing, match the embedment of the existing footing.

When widening an existing bridge using separate footings, match the embedment of the existing footing or provide a minimum embedment of two feet from the finish grade to the top of the new footing, whichever results in the top of the new footing being lower.

## 7.2 CLASSIFICATIONS AND DEFINITIONS

### 7.2.1 Major Widening

A "Major Widening" is new construction work to an existing bridge facility which doubles the total number of traffic lanes or bridge deck area of the existing bridge facility. The area to be calculated is the transverse coping-to-coping dimension.

### 7.2.2 Minor Widening

A "Minor Widening" is new construction work to an existing bridge facility that does not meet the criteria of a major widening.

*Commentary: The term "facility" describes the total number of structures required to carry a transportation route over an obstruction. In this context, adding two lanes of traffic to one bridge of twin, two-lane bridges would be a minor widening because the total number of lanes of resulting traffic (six) in the finished "facility" is not twice the sum number of lanes of traffic (four), of the unwidened, existing twin bridges.*

## 7.3 ANALYSIS AND DESIGN

### 7.3.1 Aesthetics

A. Design widenings to match the aesthetic level of the existing bridge.

B. Additions to existing bridges should not be obvious "add-ons".

C. When widening an existing bridge that does not have an existing Class 5 coating, follow the requirements of ***SDG*** 1.4.5. When widening a bridge that has an existing Class 5 coating, coat the new portions of the bridge and clean and recoat corresponding portions of the existing bridge as required with Class 5 coating in accordance with ***SDG*** 1.4.5. Remove the existing Class 5 coating from existing portions of the bridge as appropriate and if required so that the complete widened bridge presents a uniform appearance.

### 7.3.2 Materials

Materials used in the construction of the widening should have the same thermal and elastic properties as those of the existing structure.

### 7.3.3 Load Distribution

A. See ***SDG*** 2.9.C.

B. When determining the distribution of the dead load for the design of the widening, and when performing stress checks of the existing structure, consider the construction sequence and degree of interaction between the widening and the existing structure after completion.

### 7.3.4 Design Specifications

A. Design all widenings and rehabilitations in accordance with ***LRFD***.

B. Review stresses in the main exterior member of the existing structure for construction conditions and the final condition; i.e., after attachment of the widened portion of the structure. When computations indicate overstresses in the exterior member of the existing structure, request a Design Variation from the appropriate FDOT Structures Design Office.

### 7.3.5 Overlays

A. Generally, asphalt overlays on bridge decks should be removed except where the overlay is part of the original design. When an asphalt overlay is to be removed, add the following General Note to the plans:

   "Use extreme care when removing asphalt from the existing bridge deck. Repair any damage at no cost to the Department."

B. For existing bridges with water spread drainage issues that may require sloping overlays consult with the District Structures Design Engineer.

### 7.3.6 Substructure

As with any bridge structure, when selecting the foundation type and layout for a bridge widening, consider the recommendations of the District Geotechnical Engineer. For bridges over water, also consider the effects from scour per ***SDG*** 3.3 with input from the District Drainage Engineer.

### 7.3.7 Other Special Considerations (Rev. 01/17)

A. When detailing connections and selecting or permitting construction methods, consider the amount of differential camber present prior to placing the new deck.

B. Avoid open or sealed longitudinal joints in the riding surface (safety hazards).

C. See ***SDG*** 4.2.11 for deck construction requirements.

D. Refer to ***SDG*** Chapter 6 for bearing requirements.

E. Provide ample clearance between proposed driven piles and existing piles, utilities, or other obstructions. This is especially critical for battered piles.

F. Bearing fixity and expansion devices should be the same in both the widened and existing bridges.

G. See ***SDG*** 4.3.4 for prestressed beam temporary bracing requirements.

H. Obtain prior approval from the SDO to widen an existing post-tensioned bridge which has bonded (grouted) tendons with a new section of bridge which will have unbonded tendons (tendons with flexible filler).

| **Modification for Non-Conventional Projects:** |
| --- |
| Delete ***SDG*** 7.3.7.H and see the RFP for requirements. |

*Commentary: The structural behavior of components with bonded post-tensioning differs from that of components with unbonded post-tensioning and must be accounted for in the design of a widening.*

## 7.4 ATTACHMENT TO EXISTING STRUCTURE

### 7.4.1 Drilling

A. When drilling into heavily reinforced areas, specify exposure of the main reinforcing bars by chipping.

B. Specify that drilled holes have a minimum edge distance of three times the metal anchor diameter (**3d**) from free edges of concrete and 1-inch minimum clearance between the edges of the drilled holes and existing reinforcing bars.

C. Specify core drilling for holes with diameters larger than 1½-inches or when necessary to drill through reinforcing bars.

D. Adhesive Anchor Systems must be SDO approved and comply with the criteria and requirements of ***SDG*** Chapter 1.

### 7.4.2 Dowel Embedments

Ensure that reinforcing bar dowel embedments meet minimum development length requirements whenever possible. If this is not possible (e.g., traffic railing dowels into the existing slab or deck), the following options are available:

A. Reduce the allowable stresses in the reinforcing steel by the ratio of the actual embedment divided by the required embedment.

B. If embedded anchors are used to develop the reinforcing steel, use Adhesive Anchor Systems (see ***SDG*** 1.6) designed in accordance with ***SDG*** Chapter 1.

### 7.4.3 Surface Preparation

Specify that surfaces be prepared for concreting in accordance with "Removal of Existing Structures" in Sections 110 and 400 of the ***Specifications***.

### 7.4.4 Connection Details (Rev. 01/17)

A. Figure 7.4.4-1, Figure 7.4.4-2, Figure 7.4.4-3 and Figure 7.4.4-4 are details that have been used successfully for bridge widenings for the following types of bridge superstructures.

B. Flat Slab Bridges (Figure 7.4.4-1): A portion of the existing slab should be removed in order to expose the existing transverse reinforcing for splicing. If the existing reinforcing steel cannot be exposed, the transverse slab reinforcing steel for the widening may be doweled directly into the existing bridge without meeting the normal splice requirement. When splicing to the existing steel is not practical, Adhesive Anchor Systems (see ***SDG*** 1.6), designed in accordance with ***SDG*** Chapter 1, must be utilized for the slab connection details as shown in Figure 7.4.4-1 and Figure 7.4.4-4.

C. T-Beam Bridges (Figure 7.4.4-2): The connection shown in Figure 7-4.4.2 for the deck connection is recommended. Limits of deck removal are at the discretion of the EOR but subject to the Department's approval.

D. Steel and Concrete Girder Bridges (Figure 7.4.4-3): The detail shown in Figure 7.4.4-3 for the deck connection is recommended for either prestressed concrete or steel beam superstructures.

*Commentary: These figures are for general information and are not intended to restrict the EOR in his judgment.*

## Figure 7.4.4-1 Flat Slab Widening

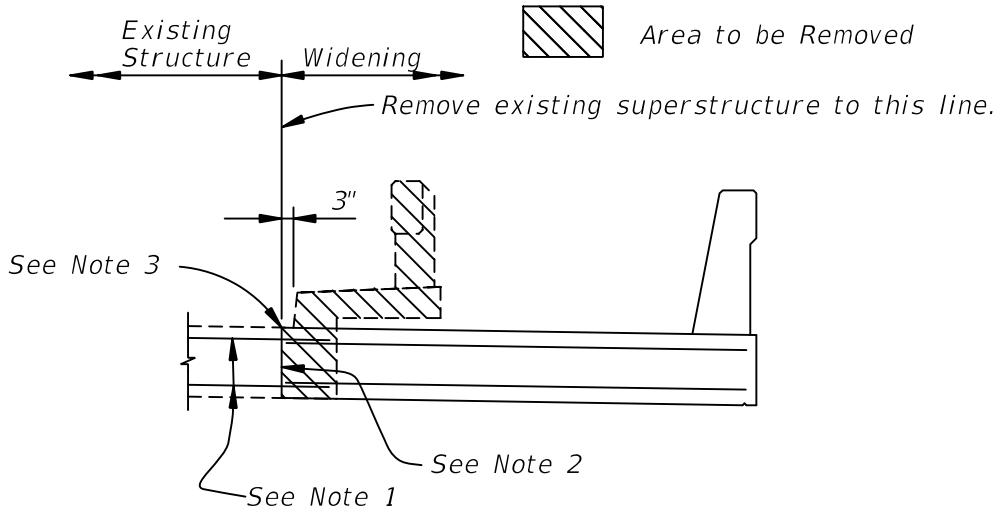


NOTES:

1. Existing transverse reinforcing to remain in place. Clean bars, straighten and embed into the slab widening. If bars are broken or otherwise determined to be unsatisfactory by the Engineer, replace with dowel bars as shown in Figure 7.4.4–4.

2. Clean all contacting surfaces between the old and new concrete immediately before casting concrete.

3. Score concrete for full length of span by sawing to top of reinforcing. Avoid damaging reinforcing steel during sawing operation and slab removal.

WIDENING DETAIL FOR FLAT SLAB SUPERSTRUCTURE

## Figure 7.4.4-2 Monolithic Beam and Deck Widening

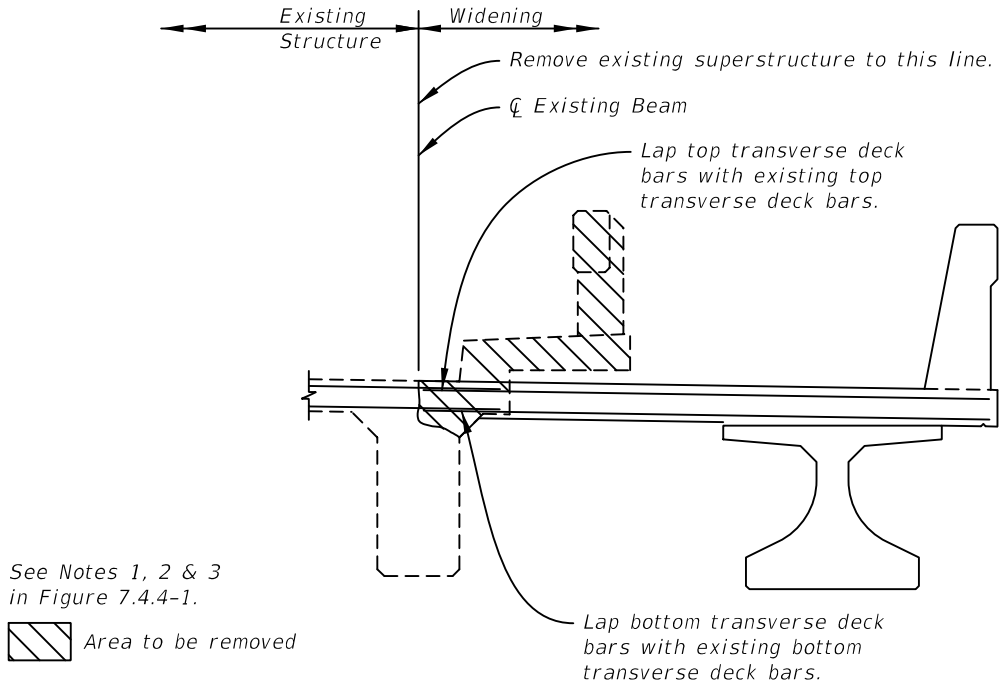


WIDENING DETAIL FOR MONOLITHIC BEAM AND SLAB SUPERSTRUCTURE

## Figure 7.4.4-3 AASHTO Beam Superstructure Widening

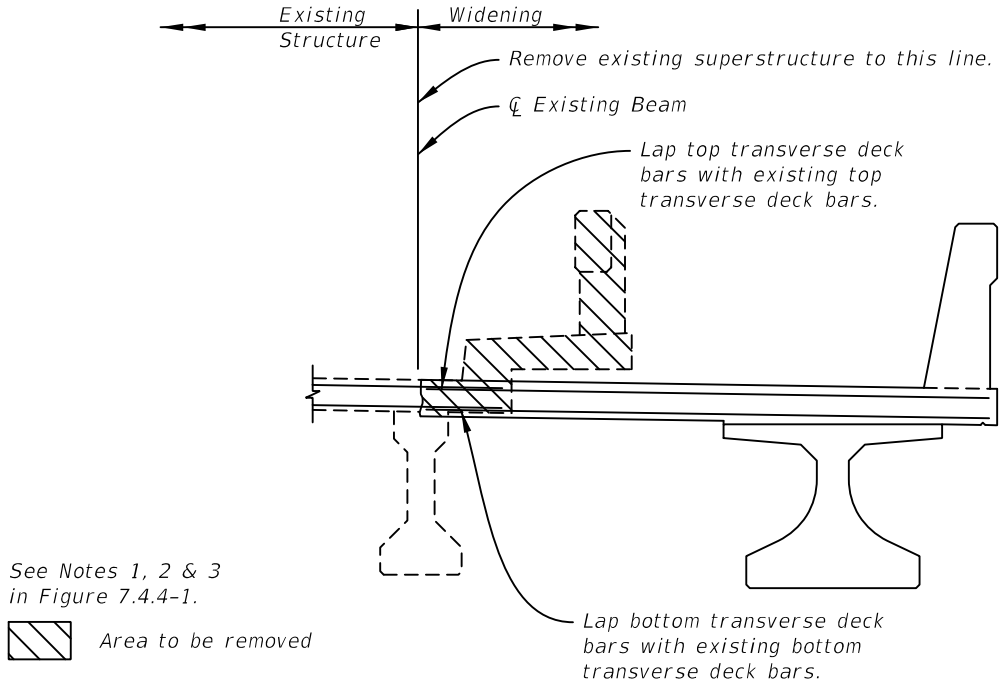


WIDENING DETAIL FOR AASHTO BEAM SUPERSTRUCTURE

## Figure 7.4.4-4 Dowel Installation

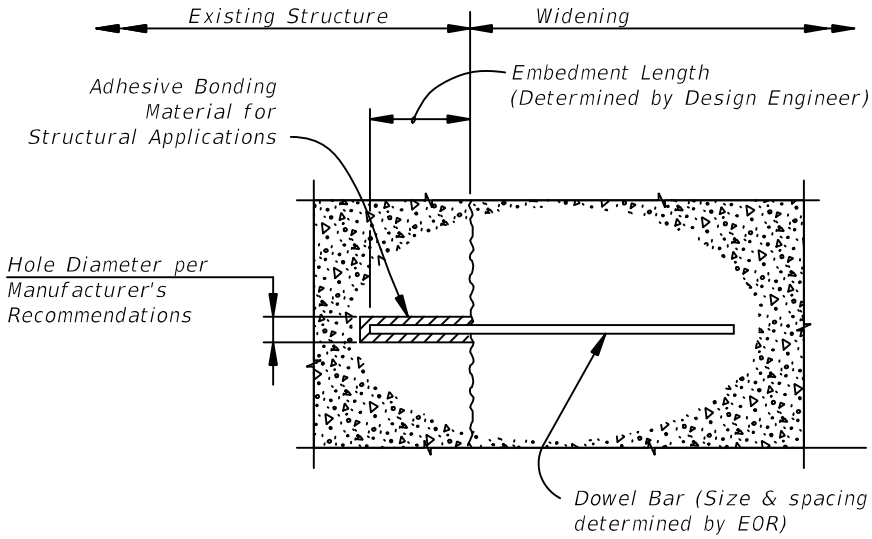


NOTES:

1. Verify that holes for Dowel Bars are thoroughly clean and dry prior to placing bonding material.
2. Comply with Sections 416 & 937 of the Specifications.
3. Shift dowel hole locations if existing reinforcing steel is encountered.

WIDENING DETAIL SHOWING DOWEL INSTALLATION

## 7.5 CONSTRUCTION SEQUENCE

A. Show on the preliminary plans, a construction sequence which takes into account the Traffic Control requirements.

B. Submit Traffic Control Plans for traffic needs during construction activities on the existing structure such as installation of new joints, deck grooving, etc.

C. Include in the final plans, a complete outline of the order of construction along with the approved Traffic Control Plans. Include details for performing any necessary repairs to the existing bridge.

## 7.6 WIDENING RULES

A. For the design of bridge widening adhere to the following criteria:

1. For widening AASHTO, Bulb-T, and cast-in-place concrete beam bridges, use Florida-I beams. For widening existing AASHTO Type II Beam bridges, investigate the most economical option for using either AASHTO Type II Beams or FIB 36 Beams. For all other widenings, use the same superstructure type and depth where possible.

*Commentary: The increased span and load carrying capacity of the Florida-I will generally allow designers to widen bridges using shallower beam depth than existing beams. For example the designer can use FIB 54 to widen an existing AASHTO type V bridge.*

2. Do not mix concrete and steel beams in the same span.
3. Coordinate the use of non-standard height prestressed concrete beams with the DSDE.

*Commentary: So as to preserve the shape of the side forms used to construct standard beams, the standard beam heights should not be decreased by reducing the web, bottom or top flange heights, or increased by increasing the web or bottom flange heights. The top flange height can be increased or the entire top flange can be eliminated without changing the shape of the standard side forms.*

4. Satisfy the vertical clearance requirements of ***PPM*** Volume 1, Section 2.10.

| **Modification for Non-Conventional Projects:** |
|---|
| Delete ***SDG*** 7.6.A and insert the following:<br>A. Do not mix concrete and steel beams in the same span.Satisfy the vertical clearance requirements of ***PPM*** Volume 1, Section 2.10 unless otherwise allowed by the RFP. |

B. The transverse reinforcement in the new deck should be spaced to match the existing spacing. Different bar sizes may be used if necessary.

C. Voided-slab bridges require special attention. Contact the DSDE for guidance. The DSDE will coordinate with the SDO to establish recommendations and criteria for the widening of the particular structure.

| **Modification for Non-Conventional Projects:** |
|---|
| Delete ***SDG*** 7.6.C and see the RFP for requirements. |

D. For all widenings, confirm that the available existing bridge plans depict the actual field conditions. Notify FDOT's Project Manager of any discrepancies which are critical to the continuation of the widening design.

*Commentary: In general, confirming the agreement of existing plans with actual field conditions should be included as part of any new survey. A structural engineer must be involved in checking that the existing plans agree with actual field conditions for items such as:*

*Bridge location, pier location, skew angle, stationing.*

*Span lengths.*

*Number and type of beams.*

*Wing wall, pier, and abutment details.*

*Utilities supported on the bridge.*

*Finished grade elevations.*

*Vertical and horizontal clearances (lateral offset).*

*Other features critical to the widening.*

E. For widenings of overpass structures, contact the District Maintenance Office for a history of overheight vehicle impacts.

| **Modification for Non-Conventional Projects:** |
| --- |
| Delete ***SDG*** 7.6.E and see the RFP for requirements. |

F. When widening with AASHTO Type II or Florida-I Beams, squaring beam ends, placing bearing pads orthogonally and eliminating permanent end diaphragms are the preferred options. However, skewed beam ends, skewed bearing pads and end diaphragms may be used at the discretion of the DSDE.

| **Modification for Non-Conventional Projects:** |
| --- |
| Delete ***SDG*** 7.6.F. |

G. Where the existing bridge uses end diaphragms and diaphragms are proposed for the widening, connect the new diaphragm to the existing diaphragm. Drill and epoxy rebar into the adjacent existing diaphragm. Do not drill into existing beams.

H. When widening an existing steel I-girder bridge adhere to the following requirements:

1. Provide concrete closure pour in deck between new and existing structure.
2. Provide diaphragms and cross-frames between new and existing girders, spaced to line up with existing diaphragms and cross-frames.
3. Attach cross-frame connection stiffeners to existing girder webs and flanges by angles or bent plates. Field drill and bolt to existing girders.
4. Field welding to existing girder webs, tension flanges, and flanges subject to stress reversal is prohibited.
5. Field welding to the compression flanges of existing girders is allowed, with approval of the SDO, but only if the compression flange is embedded in the concrete deck and bolted connections are not easily accommodated. Field welding must be performed by a certified welder in accordance with AWS D1.5. All field welding must be tested in accordance with AWS D1.5.

| **Modification for Non-Conventional Projects:** |
| --- |
| Delete ***SDG*** 7.6.H.5 and see the RFP for requirements. |

6. For major bridge widenings where the existing cross-frame connection plates are not connected to the flanges, the existing connection plates shall be retrofitted by attaching to the flanges by angles or bent plates as per the above procedures.

## 7.7 DECK GROOVING (Rev. 01/17)

A. For widened superstructures where at least one traffic lane is to be added, contact the DSDO for direction regarding grooving of the existing and new bridge deck sections.

| **Modification for Non-Conventional Projects:** |
| --- |
| Delete ***SDG*** 7.7.A and see the RFP for requirements. |

B. For projects with shoulder widening only, add a note to the plans specifying that the bridge floor finish match that of the existing bridge deck surface. If the existing bridge deck surface is in poor condition, contact the DSDO for direction.

C. Contact the DSDO for guidance for the required bridge surface finish for unusual situations or for bridge deck surface conditions not covered above.

| **Modification for Non-Conventional Projects:** |
| --- |
| Delete ***SDG*** 7.7.C and see the RFP for requirements. |

D. Quantity Determination: Determine the quantity of bridge floor grooving in accordance with the provisions of ***Specifications*** Section 400-22. Use Pay Item No. 400-7 - Bridge Floor Grooving regardless of bridge length.

| **Modification for Non-Conventional Projects:** |
| --- |
| Delete ***SDG*** 7.7.D. |

E. Specify penetrant sealers after grooving existing bridge decks with all the following conditions:

1. The existing bridge deck does not conform to the current reinforcing steel cover requirement.
2. The superstructure environment is Extremely Aggressive due to the presence of chlorides.

F. Do not specify penetrant sealers for new / widened portions of bridge structures or if the existing deck is not to be grooved.

# 8 MOVABLE BRIDGES

## 8.1 GENERAL

This chapter contains information and criteria related to the design of movable bridge projects. It sets forth the basic Florida Department of Transportation (FDOT) design criteria that are modifications and/or additions to those specified in the ***AASHTO LRFD-Movable Highway Bridge Design Specifications***, Second Edition, 2007 and any interim releases thereafter and herein referred to as ***LRFD-MHBD Specifications***. Where applicable, other sections of this ***SDG*** also apply to the design of movable bridges.

On new movable bridge, movable bridge rehabilitation or movable bridge replacement projects, include a bridge plan “General Note” which requires the Contractor to assume full responsibility for the operation and maintenance of the movable bridge(s) throughout the duration of construction. Use the “Technical Special Provisions” issued by the SDO.

### 8.1.1 Applicability

A. The design criteria of this chapter are applicable for new bridges and the electrical/ machinery design for rehabilitation of existing bridges. The requirements for structural rehabilitation will be determined on a bridge-by-bridge basis, based on evaluations during the Bridge Development Report (BDR) phase and approval by the Structures Design Office (SDO). Projects for which the criteria are applicable will result in designs that preferably, provide new bascule bridges with a "two leafs per span" configuration.

*Commentary: Single leaf bascules are not allowed, but may be considered for small channel openings where navigational and vehicular traffic is low and with approval from the SDO.*

| **Modification for Non-Conventional Projects:** |
|---|
| Delete ***SDG*** 8.1.1.A and associated Commentary and insert the following:<br>A. The design criteria of this chapter are applicable for new bridges and the electrical/ machinery design for rehabilitation of existing bridges. See the RFP for structural rehabilitation requirements. |

B. Examine and evaluate alternative bridge configurations offering favorable life cycle cost benefits. Consider improved design or operational characteristics providing advantage to the traveling public. Incorporate design and operational features that are constructible, can be safely operated and easily maintained by Department forces. Maintain consistency of configuration, when feasible, for movable bridges throughout the State.

| **Modification for Non-Conventional Projects:** |
| --- |
| Delete ***SDG*** 8.1.1.B and insert the following:<br>B. Provide bridge configurations that provide favorable life cycle cost benefits. Provide operational characteristics that minimize disruptions to the traveling public. Incorporate design and operational features that can be safely operated, and that can be easily maintained by Department forces. |

C. Design drive systems for new bascule bridges consisting of electric motors with gears. See ***SDG*** 8.1.2.

*Commentary: Assure reliable operation of movable bridges through redundancy features in drive and control systems, for both new and rehabilitation projects.*

D. Do not design non-counterweighted or reduced counterweighted bascules. Design a concrete counterweight with drained pockets for counterweight blocks (concrete, cast-iron or steel). Do not design steel-slab counterweight systems unless encapsulated in concrete. (see ***SDG*** 8.6.3)

E. Provide clearances to accommodate thermal expansion of leaf.

F. Design trunnion assemblies, support systems and drive machinery, accounting for future weight changes to the bascule leaf. (see ***SDG*** 8.6.1)

G. Design deck grading and leaf rear joints to protect machinery (including trunnion assemblies) from rain and dirt. Provide gutters to drain water away from machinery areas and provide seals at deck joints. Shield trunnions and bearings when required.

H. Closed concrete decks with partial filled grating using lightweight concrete or similar system are required for new bridges. Connect closed deck systems to framing members using shear connectors and full-depth concrete.

I. Show location of all temporary bracing required for stability prior to the deck placement.

## 8.1.2 Redundancy

A. Include recommendations for redundant drives and control systems in the BDR/30% plans submittal. For bridges having low rates of anticipated bridge openings or average daily traffic, application of redundant drive and control systems may not be cost effective. In this event, submit such information in the BDR and provide appropriate recommendations for omission of redundant systems.

| **Modification for Non-Conventional Projects:** |
| --- |
| Delete ***SDG*** 8.1.2.A and see the RFP for requirements. Refer to Commentary below for Redundant drive configurations. |

*Commentary: Redundant drive configurations include:*

1. *Hydraulic drive systems, for bridge rehabilitations, consisting of multiple hydraulic cylinders or hydraulic motors. In these systems, a pump drive motor, or its hydraulic pump, can be isolated and bridge operations can continue while repairs are accomplished.*
2. *Gear driven systems that can drive the leaf through one gear train into a single rack of a two-rack bridge.*

B. Provide two rack drives actuated by dual motor drive systems either of which will be capable of operating the bridge leaf. Normal operation of this configuration will involve operation of one drive/motor system. Provide an alternator to alternate drives/ motors for each opening. Specify dual drives (single drives powering both motors are not allowed).

C. Do not use Master/Slave configurations for Commentary 2 above. Design the system so that either drive can be taken off-line without affecting the operation. Provide central control allowing A, B, or A+B operation.

D. Rehabilitations: Design hydraulic cylinder actuated drive to function in spite of loss of a main pump motor, hydraulic pump, or drive cylinder. Design the system to include all necessary valves, piping, equipment and devices, to permit safe and expeditious changeover to the redundant mode. Specify a permanent plaque displayed in a convenient location on the machinery platform describing actions (valve closures and openings, electrical device deactivation, etc.) necessary for operation in the redundant mode.

E. When operating with either a single rack drive or asymmetric hydraulic cylinder forces applied to the leaf, design the structure for Movable Bridge - Specific load combinations, strength BV-I and BV-II. Reduce the load factors for strength BV-I to 1.35 from 1.55 [Table 2.4.2.3-1].

## 8.1.3 Trunnion Support Systems for New Bridges

A. Provide trunnion support systems as follows: (see ***SDG*** 8.6.1 and ***SDG*** 8.2)

1. Simple, rotating trunnion configuration, with bearing supports, on towers, on both inboard and outboard sides of the trunnion girder.
2. Specify sleeve bearings for use on small bascule bridges only. Provide design constraints and cost justification.

| **Modification for Non-Conventional Projects:** |
|---|
| Delete ***SDG*** 8.1.3.A.2 and see the RFP for requirements. |

3. Design trunnion supports on each side of the main girder with similar stiffness vertically and horizontally.

B. Design concrete trunnion columns; do not use steel trunnion towers.

### 8.1.4 Vertical Clearance Requirements

Design bascule leaf for unlimited vertical clearance between the fenders in the full open position. Any encroachment of the leaf into the horizontal clearance zone must receive Coast Guard approval.

### 8.1.5 Horizontal Clearance Requirements

Design all movable bridges over navigable waterways to provide up to 110 ft. horizontal clearance as required by the United States Coast Guard (USCG) and the Army Corps of Engineers. Obtain permission from the SDO if clearances over 110 ft. between fenders are required.

*Commentary: Since 1967 the exclusive control of navigable waters in the U.S. has been under the direction of the USCG. The USCG is required to consult with other agencies, which may have navigational impacts, before approving USCG permits for bridges over navigable waterways. The USCG was contacted by the Army Corps of Engineers expressing their needs for a wider channel along the Miami River, due to future dredging operations proposed by the Army Corps. After consultation between FDOT, USCG and the Army Corps it was agreed that a 110 ft. horizontal channel clearance, between fenders, would be provided on future crossings of the Miami River in locations designated as navigable. This requirement for movable bridges would also apply to other waterways, which might be subject to dredging by the Army Corps to maintain water depths. The 110 ft. clearance was established as equal to the Army Corps of Engineers designs for locks along the major rivers in the United States. It is anticipated that where no known dredging operations are required by the Army Corps, smaller horizontal clearances as established by the USCG and published in the Federal Registry will still be permitted by the USCG. Since the cost of movable bridges vary roughly by the square of the span length, these smaller horizontal clearances should be submitted for approval where dredging is not anticipated. The USCG and Army Corps of Engineers has committed to working with the FDOT before making the final decision on required clearances.*

| **Modification for Non-Conventional Projects:** |
|---|
| Delete ***SDG*** 8.1.5 and see the RFP for requirements. |

### 8.1.6 Bridge Operator Parking

In all new bridge designs, provide two parking spaces for bridge operators on the control house side of the bridge.

## 8.1.7 Definitions and Terms

A. Auxiliary Drive: Hand crank, gearmotor with disconnect-type coupling, portable hydraulic pump, drill, etc., that can be used to lower leafs for vehicular traffic or raise the leafs for marine traffic if the main drives fail.

B. Creep Speed: Not more than 10% of full speed, final creep speed will be determined by bridge conditions.

C. Emergency Stop: Leaf stops within 3±1 seconds of depressing the EMERGENCY STOP push-button or in the event of a power failure. All other rotating machinery stops instantly.

D. End-of-Travel Function: Contact connection where a closed contact allows operation and an open contact stops operation (i.e., leaf limit switches).

E. Fully Seated: Leaf is at rest on live load shoes, interlock OK to drive span locks.

F. Fully Open: Tip of leaf clears fender of a vertical line as defined by Coast Guard.

G. Hard Open: Leaf opening such that counterweight bumper blocks come in contact with pier bumper blocks.

H. Indicating Function: Contact connection where a closed contact indicates operation and an open contact indicates no operation (i.e., indicating lights).

I. Interlocks or Safety Interlocks: Ensure events occur in sequence and no out-of-sequence events can occur.

J. Leaf Tail: FDOT term for what ***LRFD-MHBD*** calls leaf heel.

K. Leaf Tip: FDOT term for what ***LRFD-MHBD*** calls leaf toe.

L. Mid-Cycle Stop: Leaf(s) stop following normal ramping after depressing the STOP push-button when in the middle of an opening or closing cycle.

M. Near Closed: A point 8 to 10 degrees (approximately, final position to be field determined) before FULL CLOSED, drive to creep speed.

N. Near Open: A point 8 to 10 degrees (approximately, final position to be field determined) before FULL OPEN, drive to creep speed.

O. Ramp: Rate of acceleration or deceleration of leaf drive.

## 8.1.8 Movable Bridge Terminology

See Figure 8.1.8-1: for standard bridge terminology.

## Figure 8.1.8-1: Movable Bridge Terminology

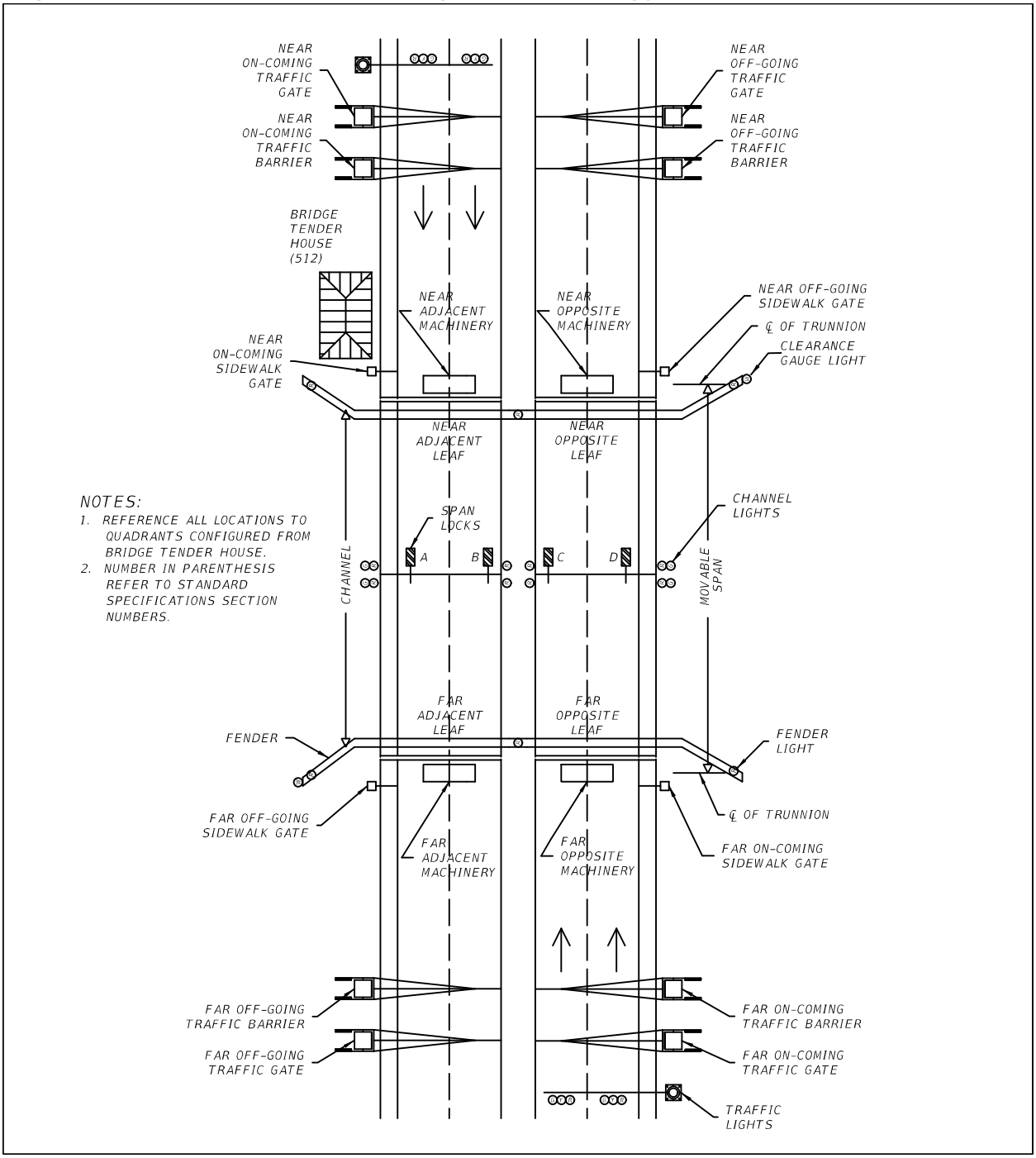


## 8.1.9 Movable Bridge Traffic Signals and Safety Gates [LRFD-MHBD 1.4.4]

Refer to ***Design Standards*** Index 17890 for Traffic Control Devices for Movable Span Bridge Signals.

## 8.1.10 Functional Checkout

A. Develop and specify an outline for performing system checkout of all mechanical/ electrical components to ensure contract compliance and proper operation. Specify in-depth testing by the Contractor.

B. Functional testing for the electrical control system consists of two parts. Perform the first part before delivery and the second part after installation on the bridge. Ensure that both tests are comprehensive. Perform the off-site functional testing to verify that all equipment is functioning as intended.

C. Make all repairs or adjustments before installation on Department property. Ensure all major electrical controls are assembled and tested in one place, at one time. The test must include as a minimum: control console, PLC, relay back-up system, Motor Control Center, motors, drives, dynamometer load tests, and all other equipment required, in the opinion of the Electrical Engineer of Record, to complete the testing to the satisfaction of the SDO.

D. If not satisfactory, repeat the testing until an acceptable result is obtained. All equipment must be assembled and inter-connected (as they would be on the bridge) to simulate bridge operation. Do not force any inputs or outputs. Provide indicating lights to show operation. Use hand operated toggle switches to simulate field limit switches.

E. Specify delivery and installation of the equipment after successful completion of the off-site testing. Re-test the entire bridge control system before placing the bridge in service. The field functional testing must include, but is not necessarily limited to, the off-site testing procedure.

F. Test all brakes, prior to the first operation of a bridge leaf with the motors, for correct torque settings. Test all brake controls and interlocks with motor controls for correct operation. Do not allow the operation of the leaf, even for “testing” purposes, with brakes manually released or with interlocks bypassed.

## 8.1.11 Functional Checkout Tests

At a minimum, require the following tests of Control Functions for both manual and semi-automatic operations:

*Commentary: The Electrical Engineer of Record is encouraged to include tests for other equipment not included in the minimum tests listed below.*

A. Demonstrate the correct operation of the bridge sequence as described in the Technical Special Provisions and in the drawings.

B. Demonstrate EMERGENCY STOP of each span (leaf) at, or during, each phase of opening and closing the bridge (phases include ramping up or down, full-speed, and creep-speed).

C. Demonstrate EMERGENCY STOP does prevent energization of all rotating machinery in any mode of operation.

D. Demonstrate that the leafs do not come to a sudden stop on a power failure.

E. Interlocks:

1. Simulate the operations of each limit switch to demonstrate correct operation and interlocking of systems.
2. Demonstrate BYPASS operation for each failure for each required bypass.
3. Simulate each failure for which there is an alarm message to demonstrate correct message displays.
4. Include sufficient testing of interlocks to demonstrate that unsafe, or out of sequence, operations are prevented.
5. Observe Position Indicator readings with bridge closed and full open to assure accurate readings.

F. Navigation Lights:

1. Demonstrate that all fixtures are working.
2. Demonstrate proper change of channel lights from red to green.
3. Demonstrate Battery Backup by simulating a power outage.

G. Traffic Gates, Sidewalk Gates, and Traffic Railings:

1. Demonstrate proper operation of each gate arm.
2. Demonstrate opening or closing times do not exceed 15 seconds in either direction.
3. Demonstrate door switch safety interlocks and manual operations using hand crank.
4. Demonstrate that gate arms are perpendicular to the roadway when RAISED and parallel to the roadway when LOWERED.
5. Demonstrate that the Traffic Lights turn RED when a traffic gate arm or a traffic railing arm moves off the full upright position.

H. Span Locks:

1. Operate each span lock through one complete cycle and record, with chart recorder, motor power (watts) throughout the operation, record lockbar to guide and lockbar to receiver clearances.
2. Operate each lock with hand crank or manual pump for one complete cycle.
3. Record time of operation (not to exceed 10 seconds), stroke, and maximum operating and relief pressures for each lock bar and power unit.
4. Verify lock bar to guides and receiver clearances and parallelism.
5. Verify that there is no movement of the leafs caused by the operation of the span locks, when the locks are pulled and driven with the bridge fully seated.
6. Demonstrate hydraulic power unit fluid level and containment in all span positions.

I. Bumper Blocks: Demonstrate bumper block contact points relative to leaf position and contact face parallelism. Record clearances between bumper blocks with leaf open to normal full open position.

J. Bridge Machinery:

1. Demonstrate operation of all lubrication systems.
2. Demonstrate live load shoe contacts and alignment of the bascule leaf rear and center span joints.
3. Operate each leaf through six continuous cycles at full speed, three cycles for each electric motor. During this test, inspect the machinery for proper function. Correct any abnormal conditions to the satisfaction of the Engineer, and retest in entirety.

K. Span Brakes Control:

1. During the span raise and lower operations, verify and record the normal automatic set and release operation of the brakes.
2. Demonstrate brake hand release, each brake, one at a time, and monitor the hand release indication through the PLC.
3. With the Span in non-permissive operation mode (span locks driven, drives not energized), manually activate the brake set and release switches and monitor their set/released indication at the control desk.

L. Emergency Power:

1. The complete installation must be initially started, and checked-out for operational compliance, by a factory-trained representative of the manufacturer of the generator set and the Automatic Transfer Switch. The supplier of the generator set must provide the engine lubrication oil and antifreeze recommended by the manufacturer for operation under the environmental conditions specified.
2. Upon completion of initial start-up and system checkout, the supplier of the generator set must notify the Engineer in advance and perform a field test to demonstrate load-carrying capability, stability, voltage, and frequency.
3. Specify a dielectric absorption test on generator winding with respect to ground. A polarization index must be determined and recorded. Submit copies of test results to the Engineer.
4. Make phase rotation test to determine compatibility with load requirements.
5. Engine shutdown features such as low oil pressure, over-temperature, over-speed, over-crank, and any other feature as applicable must be function-tested.
6. In the presence of the Engineer, perform resistive load bank tests at 100% nameplate rating. Loading must be 25%-rated for 30 minutes, 50%-rated for 30 minutes, 75%-rated for 30 minutes, and 100%-rated for 2 hours. Maintain records throughout this period and record water temperature, oil pressure, ambient air temperature, voltage, current, frequency, kilowatts, and power factor. Record the above data at 15 minute intervals throughout the test.

M. Automatic Transfer Switch:

1. Perform automatic transfer by simulating loss of normal power and return to normal power.
2. Monitor and verify correct operation and timing of: normal voltage sensing relays, engine start sequence, time delay upon transfer, alternate voltage sensing relays, automatic transfer operation, interlocks and limit switch function, timing delay and retransfer upon normal power restoration, and engine shut-down feature.

N. Programmable Logic Controller (PLC) Program:

1. Require a demonstration of the completed program's capability prior to installation or connection of the system to the bridge. Arrange and schedule the demonstration with the Engineer and the Electrical Engineer of Record.
2. Require a detailed written field test procedure to the Electrical Engineer of Record for approval. Require testing as listed below:
   a. Exercise all remote limit switches to simulate faults including locks, gates, traffic lights, etc. Readouts must appear on the alphanumeric display.
   b. After completing the local testing of all individual remote components, check all individual manual override selections for proper operation at the console. When all override selections have been satisfactorily checked-out, switch the system into semi-automatic (PLC) mode and exercise for a full raise and lower cycle. Verify that operation is as diagrammed on the plan sheet for the sequence of events.
   c. Initiate a PLC sequence of operation interweaving the by-pass functions with the semi-automatic functions for all remote equipment.
   d. Remove the power from the input utility lines. The Automatic Transfer Switch (ATS) starts the engine-generator to supply power. Raise and lower the bridge again. Verify that the bascule leafs operate in sequence; i.e., one side of the channel at a time. Upon completion of the test, re-apply utility power to ATS. The load shall switch over to utility power for normal operation.
   e. Certify that all safety features are included in the program, and that the program will not accept commands that are contrary to the basic sequence diagram. Submit failure mode testing as part of the written field test procedure.

O. Hydraulic Functions:

1. Main Power Unit: Operate main hydraulic power units of each of the leafs under the following conditions; record flow and pressure, and angle of opening versus time during operation.
   a. Operation with both pumps and all cylinders on line.
   b. Operation with one pump and all cylinders on-line (one test per pump).
   c. Operation with both pumps and two cylinders; take two cylinders off line and disconnect from the leaf.

2. Demonstrate operation of temperature and low level switches:
   a. Lower fluid level to just above low-level point and attempt operation of the leaf.
   b. Heat hydraulic fluid to shutdown temperature with immersion heater.
3. Hydraulic Cylinders: Demonstrate manual release of fluid in cylinders back to tank under no power condition.

P. Submarine Cable Assembly (Submarine Cables if used):

1. Require the following tests, using a 1,000 volt megger, on each conductor of the installed submarine cable:
   a. Insulation Resistance (IR): Measure and record the IR of each conductor to the rest of the conductors and to the cable armor. Measure and record the IR of each conductor to ground.
   b. Calculate and record the Polarization Index (PI) for each conductor as discussed in IEEE 62-1995 Revision using the 60 second and 10 minute readings.
2. IR readings of less than 100 MΩ are unacceptable. PI readings of less than 1.0 are unacceptable.
3. If more than 10 percent of conductors of any cable assembly fail the PI or the IR measurements then the cable is deemed to be defective and has to be replaced.
4. If, at any time during construction, or after the initial testing described above, the submarine cable assembly is damaged, then perform the IR and PI tests again except that the IEEE 62-1995 Revision 30 second and 60 second readings can be used to determine the PI.

Q. Submarine Cable Assembly (Wired HDPE Conduits if used):

1. Require the following tests, using a 1,000 volt megger, on each conductor of the installed submarine cable assembly:
   a. Insulation Resistance (IR): Measure and record the IR of each conductor to the rest of the conductors in the conduit. Measure and record the IR of each conductor to ground.
   b. Calculate and record the Polarization Index (PI) for each conductor as discussed in IEEE 62-1995 Revision using the 60 second and 10 minute readings.
2. IR readings of less than 100 MΩ are unacceptable. PI readings of less than 1.0 are unacceptable.
3. If more than 10 percent of conductors in any conduit fail the PI or the IR measurements then all the conductors are deemed to be defective and have to be replaced.

4. If, at any time during construction, or after the initial testing described above, any of the conduits in the submarine cable assembly is damaged, then perform the IR and PI tests again on the conductors in that conduit except that the IEEE 62-1995 Revision 30 second and 60 second readings can be used to determine the PI.

| **Modification for Non-Conventional Projects:** |
| --- |
| Add the following sentence at the end of ***SDG*** 8.1.11:<br>See the RFP for additional requirements. |

## 8.2 MAINTAINABILITY

### 8.2.1 General

These maintainability guidelines apply to new bridges and existing bridge rehabilitations.

### 8.2.2 Trunnion Bearings

A. Design trunnion bearings so that replacement of bushings can be accomplished with the leaf jacked 1/2 inch and in a horizontal position. Provide suitable jacking holes or puller grooves in bushings to permit extraction. Jacking holes must utilize standard bolts pushing against the housing that supports the bushing.

B. Specify trunnion bushings and housings of split configuration. The bearing cap and upper-half bushing (if an upper-half bushing is required) must be removable without leaf jacking or removal of other components.

### 8.2.3 Leaf-Jacking of New Bridges

A. Stationary stabilizing connector points are located on the bascule pier. These points provide a stationary support for stabilizing the leaf, by connection to the leaf stabilizing connector points. Locate one set of leaf-jacking surfaces under the trunnions (normally, this will be on the bottom surface of the bascule girder). Locate a second set on the lower surface at the rear end of the counterweight. Estimate jacking loads at each location and indicate on the drawings. Include jacking related notes as needed.

B. Locate leaf stabilizing connector points on the bascule girder forward and back of the leaf jacking surfaces. The stationary stabilizing connector point (forward) must be in the region of the Live Load Shoe. Locate stationary stabilizing connector points (rear) on the cross girder support at the rear of the bascule pier. Provide connector points to attach stabilizing structural steel components.

*Commentary: Position the stationary jacking surface at an elevation as high as practical so that standard hydraulic jacks are usable.*

C. The following definitions of terms used above describe elements of the leaf-jacking system:

1. Leaf-jacking Surface: An area located under the trunnion on the bottom surface of the bascule girder.
2. Leaf Stabilizing Connector Point (forward): An area adjacent to the live load shoe point of impact on the bottom surface of the bascule girder.
3. Leaf Stabilizing Connector Point (rear): An area at the rear end of the counterweight on the lower surface of the counterweight girder. (NOTE: For bascule bridges having tail locks, the leaf stabilizing connector point may be located on the bottom surface of the lockbar receiver located in the counterweight.)
4. Stationary Jacking Surface: The surface located on the bascule pier under the leaf jacking surfaces. The stationary jacking surface provides an area against which to jack in lifting the leaf.

### 8.2.4 Trunnion Alignment Features

A. Specify center holes in trunnions to allow measurement and inspection of trunnion alignment. Leaf structural components must not interfere with complete visibility through the trunnion center holes. Specify individual adjustment for alignment of trunnions.

B. Detail a permanent walkway or ladder with work platform to permit inspection of trunnion alignment.

### 8.2.5 Lock Systems

A. Do not specify tail locks for new bridge designs.

B. Span locks are to be accessible from the bridge sidewalk through a suitable hatch or access door. Provide a work platform suitable for servicing of the lockbars and/or shim adjustment under the deck and in the region around the span locks.

C. Design lock systems to allow disabling an individual lock, for maintenance or replacement, without interfering with the operation of any of the other lockbars on the bascule leaf.

D. Design tail locks, when required, so that the lockbar mechanism is accessible for repair without raising the leaf. The lockbar drive mechanism must be accessible from a permanently installed platform within the bridge structure.

E. Detail adjustable lockbar clearances for wear compensation.

### 8.2.6 Machinery Drive Systems

Design machinery drive assemblies so that components are individually removable from the drive system without removal of other major components of the drive system.

*Commentary: For example, a gearbox assembly is removable by breaking flexible couplings at the power input and output ends of the gearbox.*

### 8.2.7 Lubrication Provisions

A. Bridge system components requiring lubrication must be accessible without use of temporary ladders or platforms. Detail permanent walkways and stairwells to permit free access to regions requiring lubrication. Lubrication fittings must be visible, clearly marked and easily reached by maintenance personnel.

B. Designs for automatic lubrication systems must provide for storage of not less than three months supply of lubricant without refilling. Detail a vandal-proof connection box located on the bridge sidewalk, clear of the roadway, for refilling. Blockage of one traffic lane during this period is permitted.

### 8.2.8 Drive System Bushings

All bearing housings and bushings in open machinery drive and lock systems must utilize split-bearing housings and bushings and must be individually removable and replaceable without affecting adjacent assemblies.

### 8.2.9 Local Switching

A. Specify “Hand-Off-Automatic” switching capability for maintenance operations on traffic gate controllers, barrier gate controllers, sidewalk gate controllers, brakes and motors for span and tail-lock systems. Specify pushbuttons and indicating lights on MCC for local “hand” operation.

B. Specify “On-Off” switching capability for maintenance operations on main drive motor(s) and machinery brakes, and motor controller panels.

C. Specify lockable remote switches for security against vandalism.

### 8.2.10 Service Accessibility

A. Specify a service area not less than 30 inches wide around system drive components.

B. Specify a permanent walkway from bascule pier to fender system to allow access to fender-mounted components.

### 8.2.11 Service Lighting and Receptacles

A. Specify lighting of machinery and electrical rooms as necessary to assure adequate lighting for maintenance of equipment, but with a minimum lighting level of 20 fc.

B. Specify switching so that personnel can obtain adequate lighting without leaving the work area for switching. Specify master switching from the control tower.

C. Specify each work area with receptacles for supplementary lighting and power tools such as drills, soldering and welding equipment. Specify 20 ampere circuits and do not show more than six receptacles connected to a circuit.

### 8.2.12 Communications

Specify permanent communications equipment between the control tower and areas requiring routine maintenance (machinery drive areas, power and control panel locations, traffic gates and waterway).

### 8.2.13 Diagnostic Reference Guide for Maintenance

Specify diagnostic instrumentation and system fault displays for mechanical and electrical systems. Display malfunction information on a control system monitor located in the bridge control house. Record all data. System descriptive information, such as ladder diagrams and wiring data, must be available on the system memory to enable corrective actions on system malfunctions and to identify areas requiring preventive maintenance.

### 8.2.14 Working Conditions for Improved Maintainability

Specify, for either new or rehabilitated bascule bridge design, enclosed machinery or electrical equipment areas with air-conditioned areas containing electronic equipment to protect the equipment as required by the equipment manufacturer and the SDO.

### 8.2.15 Weatherproofing

A. Incorporate details to prevent water drainage and sand deposition into machinery areas on new and rehabilitated bascule bridge designs. Avoid details that trap dirt and water; provide drain holes, partial enclosures, sloped floors, etc., to minimize trapping of water and soil.

B. Specify a 2 inch concrete pad under all floor mounted electrical equipment.

## 8.3 CONSTRUCTION SPECIFICATIONS AND DESIGN CALCULATIONS

A. Use the "Technical Special Provisions" issued by the SDO as a boilerplate. Additional or modified specifications may be required.

B. Provide detailed calculations to justify all equipment and systems proposed with the 60% Plans Submittal. Provide catalog cuts or sketches showing centerlines, outlines and dimensions.

| **Modification for Non-Conventional Projects:** |
|---|
| Delete ***SDG*** 8.3.B and insert the following:<br>B. Provide detailed calculations to justify all equipment and systems proposed with the 60 percent component superstructure submittal. These calculations shall be included in the 90 percent component superstructure submittal when a 60 percent submittal is not required in the RFP. Provide catalog cuts or sketches showing centerlines, outlines and dimensions. |

C. Submit calculations in an 8½-inch x 11-inch binder.

## 8.4 DOUBLE LEAF BASCULE BRIDGES

For the design of double leaf bascule bridges, assume the span locks are driven (engaged) to transmit live load to the opposite leaf. In addition, use the Strength II Limit State, with HL93 live load, assuming the span locks are not engaged to transmit live load to the opposite leaf. Use the Redundancy Factors in ***SDG*** 2.10 as appropriate.

For load rating of double leaf bascule bridges, use the system factors given in the FDOT Bridge Load Rating Manual. Ensure the Design Inventory and FL120 Permit load ratings are greater than 1.0 assuming the span locks are driven (engaged) to transmit live load to the opposite leaf. In addition, ensure the Strength I Design Operating load rating is greater than 1.0 assuming the span locks are not engaged to transmit live load to the opposite leaf. Report the load ratings in the plans along with the span lock assumptions.

For both cases, assume the live load to be on the tip side (in front) of the trunnion.

*Commentary: Consistency is achieved between Design and Load Rating since the Design Strength II Limit State has the same 1.35 live load factor as the Load Rating Strength I Limit State under Design Operating. Requiring a Strength I Design Operating load rating factor of one with the span locks removed ensures a safe structure in a worst case span lock condition.*

## 8.5 SPEED CONTROL FOR LEAF-DRIVING SYSTEMS [LRFD-MHBD 5.4]

A. Design a drive system that is capable of operating the leaf in no more than 70 seconds (see Figure 8.5-1) under normal conditions.

### Figure 8.5-1: Speed Ramp

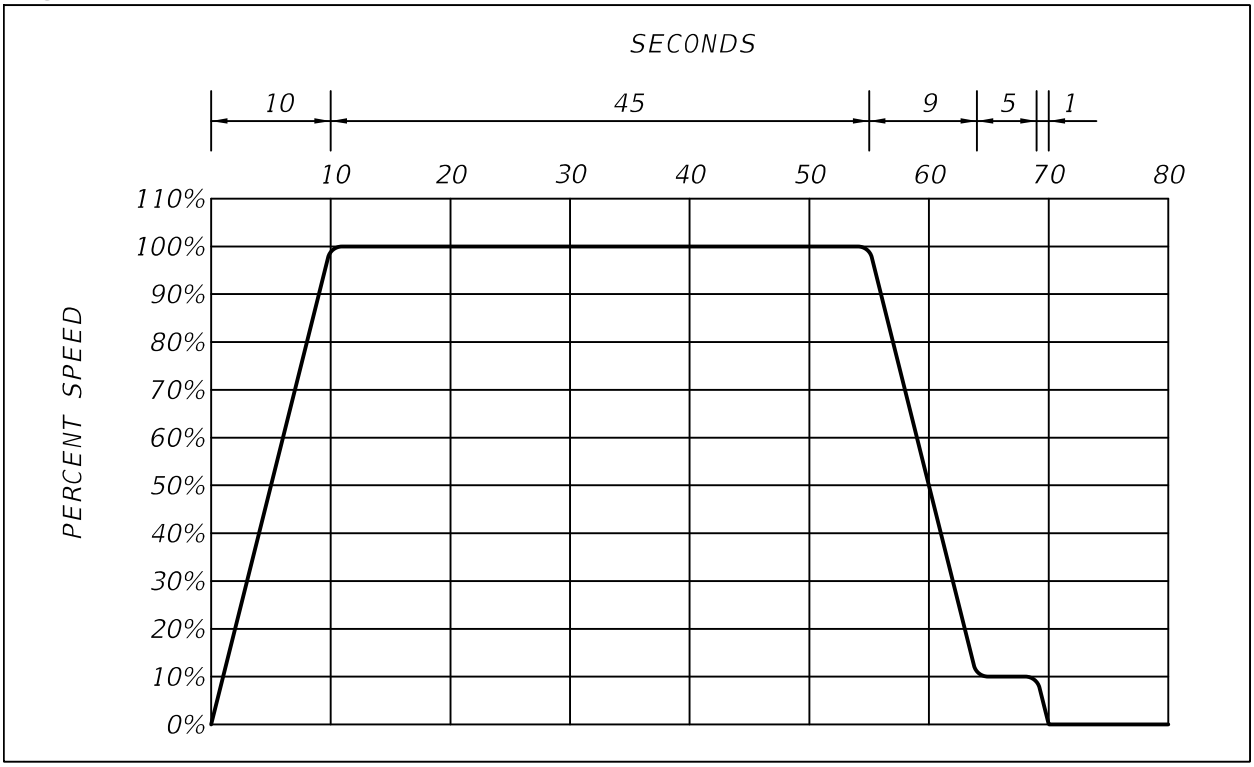


B. Clearly indicate on the plans the following required torques:

1. $T_A$ - the maximum torque required to accelerate the leaf to meet the required time of operation.
2. $T_S$ - the maximum torque required for starting the leaf.
3. $T_{CV}$ - the maximum torque required for constant velocity.

### 8.5.1 Mechanical Drive Systems [LRFD-MHBD 5.4]

A. Specify a drive capable of developing the torques stated above and operating the leaf (at full speed) in the 70 seconds time limit.

B. Compute the acceleration torque for the inertia and the loading specified for the maximum constant velocity torque [***LRFD-MHBD*** 5.4.2]. In addition the drive must be capable of meeting the maximum starting torque requirements, and the machinery must be capable of holding the leaf against 20 psf wind load in full open leaf position [***LRFD-MHBD*** 5.4.2].

### 8.5.2 Hydraulic Drive Systems [LRFD-MHBD 7]

A. Specify hydraulic drive systems only for rehabilitations. See ***SDG*** 8.7.

B. Design a drive capable of developing the acceleration torque required for the inertia and the loading specified for the maximum constant velocity torque [***LRFD-MHBD*** 5.4.2] and operating the leaf at full speed in the 70 seconds time limit stated above.

C. Operation under abnormal conditions is allowed to exceed 70 seconds. Do not exceed 130 seconds under any condition.

## 8.6 MECHANICAL SYSTEMS

### 8.6.1 Trunnions and Trunnion Bearings [LRFD-MHBD 6.8.1.3]

A. Trunnions:

1. Provide shoulders with fillets of appropriate radius. Provide clearances for thermal expansion between shoulders and bearings.
2. Do not show keys between the trunnion and the hub.
3. For trunnions over 8 inch diameter, provide a hole 1/5 the trunnion diameter lengthwise through the center of the trunnion. Extend the trunnion at least 5/8 inch beyond the end of the trunnion bearings. Specify a 2 inch long counter bore concentric with the trunnion journals at each of the hollow trunnion ends.
4. In addition to the shrink fit, detail drill and fit dowels of appropriate size through the hub into the trunnion after the trunnion is in place.
5. For rehabilitation of existing Hopkins trunnions, verify that trunnion eccentrics have capability for adjustment to accommodate required changes in trunnion alignment and are a three-piece assembly. If not, provide repair recommendations.

B. Hubs and Rings:

1. Detail Hubs and Rings with a mechanical shrink fit.
2. See Figure 8.6.1-1, for minimum requirements.

## Figure 8.6.1-1: Trunnion Hubs

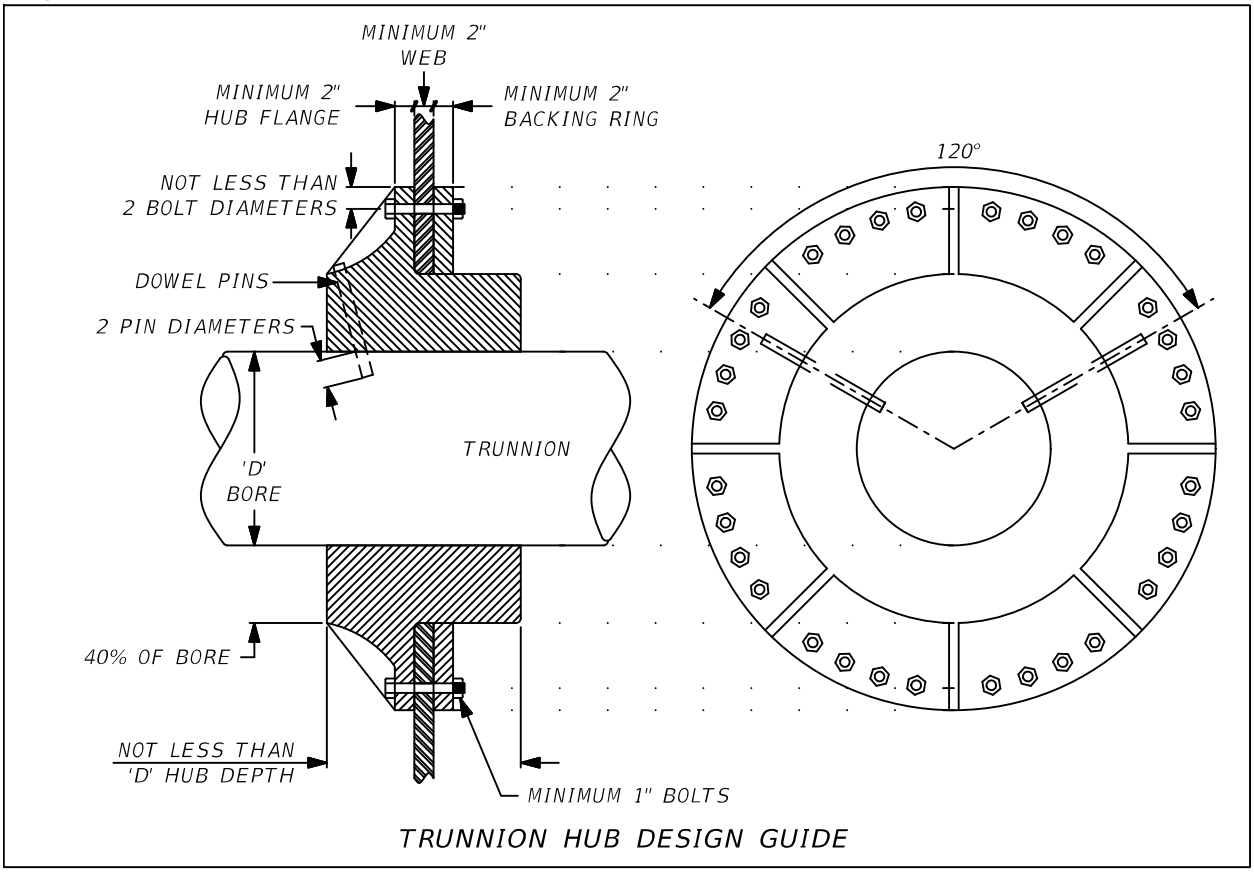


C. Trunnion Bearings:

1. When specifying anti-friction trunnion bearings, verify that the trunnion surface finish conforms to the bearing manufacturer's recommendations. Calculate deflections of the trunnion under load and compare with the manufacturer specified clearances to ensure that the journals do not bottom out and bind, particularly on rehabilitation and Hopkins frame bridges. Adjust clearances if necessary.
2. Specify a self-contained or freestanding welded steel support for each trunnion bearing. Design the pedestal such that the height will not exceed 2/3 of the larger dimension of the bearing footprint. Specify non-shrink epoxy grout at the support base and stainless steel shims at the bearing base for leveling and alignment. Design the footprint of the support at least 40% larger than the bearing footprint. Provide a minimum of 1.5 inches of grout thickness.
3. Design bearing mounting bolts and anchor bolts to be accessible.
4. Use full-size shims to cover entire footprint of bearing base.
5. Call out flatness and parallelism tolerances for bearing support machining.Call out position, orientation, and levelness tolerances for the support and bearing installation.
6. Detail machine surfaces per [***LRFD-MHBD*** 6.7.8].

### 8.6.2 Racks and Girders [LRFD-MHBD 6.8.1.2]

Detail a mechanical, bolted connection between the rack/rack frame and girder. Specify a machined finish for the connecting surfaces. Specify parallelism, perpendicularity, and dimension tolerances for rack.

### 8.6.3 Leaf Balance [LRFD-MHBD 1.5]

A. New Construction:

1. Design new bascule bridges such that the center of gravity is adjustable vertically and horizontally.
2. Design mechanical drive system bridges to meet following requirements:
   a. The center of gravity is forward (leaf heavy) of the trunnion and is located at an angle ($\alpha$) 20 degrees to 50 degrees above a horizontal line passing through the center of trunnion with the leaf in the down position.
   b. Ensure the leaf is tail (counterweight) heavy in the fully open position.
3. Design both single and double leaf bascule for a leaf heavy out of balance condition that will produce an equivalent force of two kips minimum at the tip of the leaf when the leaf is down. Design the live load shoe to resist this equivalent leaf reaction in addition to other design loads.
4. Ensure that the maximum unbalance force is four kips at the tip of the leaf when the leaf is in the down position.
5. Include tight specifications on concrete density and pour thicknesses for controlling the weight balance in case of solid decks.
6. Do not specify lead counterweight blocks.

B. Rehabilitation Projects:

Optimal balance might not be possible when rehabilitating an existing leaf. When adjusting leaf balance, adhere to the following procedures:

1. If gears are used, apply provisions A.2, A.3,and A.4 above.
2. If hydraulics are specified, ensure the balance is such that the center of gravity is forward (leaf heavy) of the trunnion throughout the operating (opening) angle.

Include detailed leaf balance adjustment plans, including the location and weight of any ballast to be furnished and installed to achieve an acceptable balance condition. Inform the SDO if these conditions cannot be met.

| **Modification for Non-Conventional Projects:** |
| --- |
| Delete the last sentence of ***SDG*** 8.6.3.B. |

C. Design Unbalance: For new and rehabilitated bridges, state the design unbalance in the plans using "**W**", "**L**" and "$\alpha$".

Where: $\alpha$ = angle of inclination of the center of gravity above a horizontal line through the trunnion when the leaf is closed. **W** = total weight of the leaf. **L** = distance from the trunnion axis to the leaf center of gravity. Show center of gravity of leaf and counterweight.

## 8.6.4 Main Drive Gearboxes [LRFD-MHBD 6.7.6]

A. Specify and detail gearboxes to meet the requirements of the latest edition of ***ANSI/AGMA 6013 Standard for Industrial Enclosed Gear Drives***. Specify and detail gearing to conform to ***ANSI/AGMA 2015-1-A01***, Accuracy Grade A8 or better using a Service Factor of 1.0 or higher, and indicating input and output torque requirements.

B. Allowable contact stress numbers, "Sac," must conform to the current AGMA 2001 Standard for through hardened and for case-hardened gears.

C. Allowable bending stress numbers, "Sat," must conform to the current AGMA 2001 Standard for through hardened and for case-hardened gears.

*Commentary: These allowable contact and bending stress numbers are for AGMA Grade 1 materials. Grade 2 allowables are acceptable only with an approved verification procedure and a sample inspection as required per the SDO.*

D. Indicate that all gearboxes on a bridge are models from one manufacturer. Include gear ratios, dimensions, construction details, and AGMA ratings on the Drawings.

E. Specify a gearbox capable of withstanding an overload torque of 300% of full-load motor torque. This torque must be greater than the maximum holding torque for the leaf under the maximum brake-loading conditions.

F. Specify gears with spur, helical, or herringbone teeth. Bearings must be anti-friction type and must have an L-10 life of 40,000 hours as defined in AASHTO, except where rehabilitation of existing boxes requires sleeve-type bearings. Housings must be welded steel plate or steel castings. The inside of the housings must be sandblast-cleaned prior to assembly, completely flushed, and be protected from rusting. Specify exact ratios.

G. Specify units with means for filling and completely draining the case. Specify drains with shutoff valves to minimize spillage. Furnish each unit with a moisture trap breather of the desiccant type with color indicator to show desiccant moisture state.

H. Specify an inspection cover to permit viewing of all gearing (except the differential gearing, if impractical), and both a dipstick and a sight oil level gauge to show the oil level. Specify sight oil-level gauges of rugged construction and protected from breakage.

*Commentary: If specifying a pressurized lubrication system for the gearbox, include a redundant lubrication system. The redundant system must operate whenever the primary system is functioning.*

I. Design and detail each gearbox with its associated brakes and motors mounted on a welded support. Do not use vertically stacked units and components. Detail and dimension the supports. Size and locate all mounting bolts and anchor bolts. Use non-shrink epoxy grout at support base.

## 8.6.5 Open Gearing [LRFD-MHBD 6.7.5]

Limit the use of open gearing. When used, design open gearing per AGMA specifications. Design and specify guards for high-speed gearing. Provide Accuracy Grade A9 or better per ***ANSI/AGMA 2015-1-A01***.

## 8.6.6 Span Locks [LRFD-MHBD 6.8.1.5.1]

A. General:

1. Design span locks attached to the main bascule girders. Provide maintenance access. Do not use side locks on new bridge designs.
2. Specify a 4 inch x 6 inch minimum rectangular lock bars, unless analysis shows need for a larger size. Submit design calculations and the selection criteria for review and approval.
3. Install the bar in the guides and receivers with bronze wear fittings top and bottom, properly guided and shimmed. Provide lubrication at the sliding surfaces. Both the front and rear guides are to have a "U" shaped wear-plate that restrains the bar sideways as well as vertically. The receiver is to have a flat wear-plate to give freedom horizontally to easily insert the lock-bar in the opposite leaf. The total vertical clearance between the bar and the wear-shoes must be 0.010 inch to 0.025 inch. Specify the total horizontal clearance on the guides to be 1/16 inch ±1/32 inch.
4. Detail adequate stiffening behind the web for support of guides and receivers.
5. Mount guides and receivers with 1/2 inch minimum shims for adjusting. Slot wear-plate shims for insertion and removal. Consider the ease of field replacing or adjusting shims in the span lock design.
6. Specify alignment and acceptance criteria for complete lock bar machinery, the bar itself in both horizontal and vertical, and for the bar with the cylinder.
7. Specify lubrication fittings at locations that are convenient for routine maintenance.
8. Mount actuation elements on the lock to activate limit switches to control each end of the stroke. Incorporate a means to adjust the limit switch actuation. Taper the receiver end of the lock-bar to facilitate insertion into the receivers of the opposite leaf.
9. Ensure the connection of the lock-bar to the hydraulic cylinder allows for the continual vibration due to traffic on the bridge. Specify self-aligning rod-end couplers or cylinders with elongated pinholes on male clevises. Mount limit switches for safety interlocks to sense lock-bar position. Mount limit switches for span lock operator controls to sense rod position.

10. Specify a hydraulic power system utilizing a reversing motor-driven pump or a uni-directional pump with 4-way directional valve, and associated valves, piping and accessories. Specify relief valves to prevent over pressure should the lock-bar jam. Specify pilot operated check valves in the lines to the cylinder to lock the cylinder piston in place when hydraulic pressure is removed. Provide a hydraulic hand pump and quick-disconnect fittings on the piping to allow pulling or driving of the lock-bar on loss of power. Specify the time of driving or pulling the bar at 5 to 9 seconds.

11. Design and specify access platforms with access hatches located out of the travel lanes.

B. Lock Design Standards:

1. The empirical formula, Equation 8-1 listed below, can be used to determine double leaf bascule lock loads with acceptable results; however, more exact elastic analysis can be used if the solution thus obtained is not accurate enough.

$$\mathbf{S} = (\mathbf{P}/\mathbf{4})(\mathbf{A}/\mathbf{L})^{\mathbf{2}}(\mathbf{3} - \mathbf{A}/\mathbf{L}) \qquad \text{[Eq. 8-1]}$$

**S** = Shear in lock in kips for a given load on the span, "**P**."

**A** = Distance in feet from the support to the given load, "**P**."

**L** = Distance in feet from the support to the center lock.

See Figure 8.6.6-1: for diagrammatic sketch of "**S**," "**A**," and "**L**."

Position trucks both transversely (multiple lanes) and longitudinally on the leaf such that the load on the lock bar is maximized.

Double the Dynamic Load Allowance (IM) to 66% for lock design.

## Figure 8.6.6-1: Lock Design Criteria

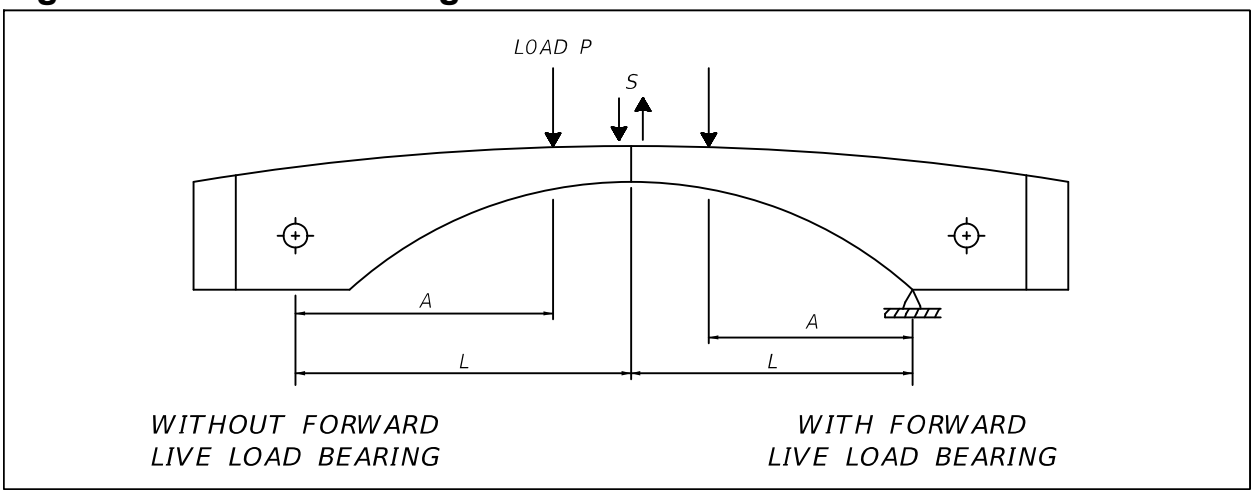


2. Use a Dynamic Load Allowance of 100% for Lock Design on a double-leaf bascule span expected to carry traffic with ADTT (Average Daily Truck Traffic) > 2500.

### 8.6.7 Brakes [LRFD-MHBD 5.6 and 6.7.13]

A. Specify thrustor type brakes. Specify double pole, double throw limit switches to sense brake fully set, brake fully released, and brake manually released.

B. Provide a machinery brake and a motor brake. Submit calculations justifying the brake torque requirements. Specify AISE-NEMA brake torque rating in the plans. Ensure that both dimensions and torque ratings are per AISE Technical Report No. 11, September 1997. Show brake torque requirements on plans.

C. Carefully consider machinery layout when locating brakes. Avoid layouts that require removal of multiple pieces of equipment for maintenance of individual components.

D. Ensure that brakes are installed with base in horizontal position only.

### 8.6.8 Couplings [LRFD-MHBD 6.7.9.3]

A. Submit calculations and manufacturer's literature for coupling sizes specified.

B. Provide coupling schedule on plans. Include torque ratings, and bore sizes, key sizes and number of keys for the driver and driven sides.

C. Specify coupling guards.

D. Specify low maintenance couplings.

### 8.6.9 Clutches

Rate clutches for emergency drive engagement for the maximum emergency drive torque. The engaging mechanism must be positive in action and designed to remain engaged or disengaged while rotating at normal operating speed. Make provisions so that the main operating drive is fully electrically disengaged when the clutch is engaged. Specify double pole, double throw limit switches to sense fully engaged and fully disengaged positions.

### 8.6.10 Bearings (Sleeve and Anti-Friction) [LRFD-MHBD 6.7.7]

A. Sleeve Bearings must be grease-lubricated bronze bushings 8 inches in diameter and less and must have grease grooves cut in a spiral pattern for the full length of the bearings. Provide cast-steel base and cap for bearings. Specify caps with lifting eyes with loads aligned to the plane of the eye.

B. Anti-Friction Bearing pillow block and flange-mounted roller bearings must be adaptor mounting, self-aligning, expansion and/or non-expansion types.

   1. Specify cast steel housings capable of withstanding the design radial load in any direction, including uplift. Specify that same supplier shall furnish the bearing and housing.

   2. Specify bases cast without mounting holes so that at the time of assembly with the supporting steel work, mounting holes are "drilled-to-fit" in the field.

3. Specify that seals must retain the lubricant and exclude water and debris.
4. Specify high-strength steel cap bolts on pillow blocks. The cap and cap bolts must be capable of resisting the rated bearing load as an uplift force. Where clearance or slotted holes are used, fill the clearance space, after alignment, with a non-shrink grout suitable for steel to ensure satisfactory side load performance.

C. Bearing Supports:

1. Detail a self-contained, welded, steel support for each pair of pinion bearings. Avoid shapes and conditions that trap water, or collect debris.
2. Mount bearings and supports in horizontal position only, along both the axes.
3. Indicate or specify flatness and parallelism, position, levelness, and orientation tolerances for the supports.
4. Machine the mounting surface per [***LRFD-MHBD*** 6.7.8].
5. Design to assure that the anchor bolts will be accessible for hydraulic tensioning.
6. Provide a minimum of 30 inches service clearance all-around.

## 8.6.11 Anchors [LRFD-MHBD 6.4.1.4]

A. For machinery supports anchored to concrete, design for the maximum forces generated in starting or stopping the leaf plus 100% impact. Design hydraulic cylinder supports for 150% of the relief valve setting or the maximum operating loads plus 100% impact, whichever is greater. Detail machinery supports anchored to the concrete by preloaded anchors such that no tension occurs at the interface of the steel and concrete under any load conditions.

B. Mechanical devices used as anchors must be capable of developing the strength of reinforcement without damage to the concrete. All concrete anchors must be undercut bearing, expansion-type anchors. Develop the anchorage by expanding an anchor sleeve into a conical undercut to eliminate direct lateral stresses found in the setting of conventional anchors. The expansion anchors must meet the ductile failure criteria of American Concrete Institute (ACI) Standard 349, Appendix B. Design an expansion anchoring system that can develop the tensile capacity of the bolt without slip or concrete failure. The bolt must consistently develop the minimum specified strength of the bolting material to provide a favorable plastic stretch over the length of the bolt prior to causing high-energy failure. Require pullout testing of anchors deemed to be critical to the safe operation of the bridge machinery system. Perform pullout verification tests at not less than 200% of maximum operational force levels.

C. Design the conical undercut and the nut to transfer the bolt tension load into direct bearing stress between the conical nut and expansion sleeve and the expansion sleeve and conical concrete surface. The depth and diameter of the embedment must be sufficient to assure steel failure, with concrete cone shear strength greater than the strength of the bolting material.

D. Anchor Bolt Design:

1. Design anchor bolts subject to tension at 200% of the allowable basic stress and shown, by tests, to be capable of developing the strength of the bolt material without damage to the concrete.
2. Base the design strength of embedment on the following maximum steel stresses:
   a. Tension, $\mathbf{fs_{max} = 0.9f_y}$
   b. Compression and Bending, $\mathbf{fs_{max} = 0.9f_y}$
   c. Shear, $\mathbf{fs_{max} = 0.55f_y}$ (apply shear-friction provisions of ACI, Section 11.7)
   d. Reduce the permissible design strength for the expansion anchor steel to 90% of the values for embedment steel.
   e. For bolts and studs, consider the area of steel required for tension and shear based on the embedment criteria as additive.
   f. Calculate the design pullout strength of concrete, $\mathbf{P_{c'}}$ in pounds, as:

      $$P_{c'} = 3.96\varphi\sqrt{f'_c}A$$

      Where:

      $\varphi$ = Capacity reduction factor, **0.65**

      **A** = Projected effective area of the failure cone, $in^2$

      $\mathbf{f'_c}$ = Specified compressive strength of concrete, psi
   g. Steel strength controls when the design pullout strength of the concrete, $\mathbf{P_{c'}}$ exceeds the minimum ultimate tensile strength of the bolt material.
   h. The effective stress area is the projected area of the stress cone radiating toward the concrete surface from the innermost expansion contact surface between the expansion anchor and the drilled hole.
   i. The effective area must be limited by overlapping stress cones, by the intersection of the cones with concrete surfaces, by the bearing area of anchor heads, and by the overall thickness of the concrete. The design pullout strength of concrete must be equal to or greater than the minimum specified tensile strength (or average tensile strength if the minimum is not defined) for the bolting material.

### 8.6.12 Fasteners [LRFD-MHBD 6.7.15] (Rev. 01/17)

A. Ensure all bolts for connecting machinery parts to each other and to supporting members are shown on the plans or specified otherwise and conform to one of the following types:

   1. High-strength bolts.
   2. Turned bolts, turned cap screws, and turned studs.
   3. High-strength turned bolts, turned cap screws, and turned studs.

B. Specify fasteners as per the requirements of ***LRFD-MHBD***.

C. Turned bolts, turned cap screws, and turned studs must have turned shanks and cut threads. Turned bolts must have semi-finished, washer-faced, hexagonal heads and nuts. All finished shanks of turned fasteners must be 0.06-inch larger in diameter than the diameter of the thread, which must determine the head and nut dimensions.

D. Threads for cap screws must conform to the Unified Coarse Thread Series, Class 2A. For bolts and nuts, the bolt must conform to the Coarse Thread Series, Class 2A. The nut must be Unified Coarse, Class 2B. in accordance with the ANSI B1.1 Screw Threads.

E. Furnish positive locks of an approved type for all nuts except those on ASTM F3125 Grade A325 Bolts. If double nuts are used, use them for all connections requiring occasional opening or adjustment. Provide lock washers made of tempered steel if used for securing.

F. Specify high-strength bolts with a hardened plain washer meeting ASTM F436 at each end.

G. Wherever possible, insert high strength bolts connecting machinery parts to structural parts or other machinery parts through the thinner element into the thicker element.

H. Specify cotters that conform to SAE standard dimensions and are made of half-round stainless steel wire, ASTM A276, Type 316.

## 8.7 HYDRAULIC SYSTEMS FOR REHABILITATIONS [LRFD-MHBD 7]

A. Perform complete analysis and design of hydraulic systems utilized for leaf drive and control, including evaluation of pressure drops throughout the circuit for all loading conditions. Calculate pressure drops for all components of their circuits including valves, filters, hoses, piping, manifolds, flow meters, fittings, etc. Determine power requirements based upon pressure drops at the required flows and conservative pump efficiency values.

B. Design the system so that normal operating pressure is limited to 2500 psi. During short periods in emergency operations, pressure can increase to 3000 psi, maximum. Correlate hydraulic system strength calculations with the structure loading analysis.

C. Design the power unit and driving units for redundant operation so that the bridge leafs can operate at a reduced speed with one power unit or one driving unit out of service. Design the power unit to permit its installation and removal in the bridge without removing any major components. Design the power unit to allow the removal of each pump, motor, filter, and main directional valves without prior removal of any other main components. Ensure operation of the redundant components is possible with the failed component removed from the system.

D. Design all leaf operating hydraulic components within the pier enclosure to prevent any escape of oil to the environment. Specify a drip pan extending beyond the outermost components of the power unit and flange connections to prevent spilling oil leakage on the machinery room floor. Specify sump pumps and other clean up devices suitable for safe collecting and removing of any spilled oil.

E. Design the hydraulic system to limit the normal operating oil temperature to 170° F during the most adverse ambient temperature conditions anticipated.

F. Specify acceptance criteria for hydraulic systems to require pressure uniformity among multiple cylinders of the same leaf.

### 8.7.1 Hydraulic Pumps [LRFD-MHBD 7.5.5]

Specify minimum pressure rating of pumps to be 1.5 times the maximum operating pressure. Specify pumps of the Pressure Compensated type. Variation of the pressure setting, including ±50 cst viscosity change must be ±2.5% maximum. Overall minimum efficiency must be 0.86. Boost pumps of any power, and auxiliary or secondary pumps less than 5 hp, need not be pressure compensated.

### 8.7.2 Cylinders

A. Design the hydraulic cylinder drive systems to prevent sudden closure of valves, and subsequent sudden locking of cylinders, in the event of a power failure or emergency stop. Specify cylinders designed according to the ASME Boiler and Pressure Vessel Code, Section VIII. Specify cylinders with a minimum static failure pressure rating of 10,000 psi as defined by NFPA Standards; and designed to operate on biodegradable hydraulic fluid unless otherwise approved by the SDO. Specify ports on each end of the cylinder for pressure instrumentation and bleeding.

B. For all non-drive cylinders, specify stainless steel rods with chrome plated finish 0.005 to 0.012 inches thick per SAE AMS 2406L, Class 2a or others as approved by the SDO.

C. Specify rod-end and cap-end cushions.

D. Design the main lift cylinders with pilot operating counterbalance or other load protection valves. Specify manual over-ride valve operators to allow lowering the leaf without power. Ensure they are manifolded directly to ports of cylinder barrel and hold load in position if supply hoses leak or fail.

### 8.7.3 Control Components [LRFD-MHBD 7.5.6]

A. Flow Control Valves: Limit the use of non-compensated flow control valves to applications where feed rates are not critical and where load induced pressure is relatively constant. Where load induced pressure is variable, specify pressure compensated flow control valves.

B. Directional Valves: Avoid vertical mounting of solenoid Directional Valves where solenoids are hanging from the valve; horizontal mounting is recommended. Solenoid operated directional control valves provided with a drain connection to reduce response times must always be mounted horizontally.

C. Relief Valves: Specify relief valves to protect all high-pressure lines.

D. Check Valves: Specify poppet type check valves on main circuits or located to hold loads.

### 8.7.4 Hydraulic Lines [LRFD-MHBD 7.9.1]

A. Piping: Specify stainless steel piping material conforming to ASTM A312 Grade TP316L. For pipe, tubing, and fittings, the minimum ratio of burst pressure rating divided by design pressure in the line must be four. Provide calculations indicating that the velocity of fluid is at or below 4.3 ft/s in suction lines, 6.5 ft/s in return lines, and 21.5 ft/s in pressure lines.

B. Manifolds: Specify the use of manifolded components.

C. Flexible Hose: Specify flexible hose only in cases where motion or vibration makes the use of rigid piping undesirable. Ensure that the minimum ratio of burst pressure rating divided by design pressure in the line is four.

D. Seals: Specify all seals, including the ones installed inside hydraulic components, to be fully compatible with the hydraulic fluid being used and adequate for the maximum pressure and temperature operating at that point.

### 8.7.5 Miscellaneous Hydraulic Components

A. Receivers (Reservoirs): Ensure tanks in open loop systems have a capacity greater than the maximum flow of three minutes operation of all pumps connected to the tank plus 10%, and/or the capacity of the total oil volume in the system. Tanks must have an adequate heat dissipation capacity to prevent temperatures above 170° F. Tanks in closed-loop hydrostatic systems must circulate, filter, and cool enough oil to maintain a maximum oil temperature of 170° F. Specify suction port strainers with oil shut-off valves. Specify tanks with easy drainage and provided with adequate openings that allow easy cleaning of all surfaces from the inside. Specify sumps with magnetic traps to capture metal particles. Specify Stainless Steel ASTM A316L tank material. Specify the use of air bladders to avoid water contamination from air moisture condensation due to the breathing effect of the tank.

B. Filtration: Design and specify a filtering system so that filters can be easily serviced and filter elements can be changed without disturbing the system. Do not specify valves that can be left in the closed position. Strainers are allowed in the suction lines between the tank and the main pumps. Use filters if the system is capable of maintaining enough static head under all operating conditions at the pumps' inlets. Require absolute pressure (vacuum) sensors to stop the pumps if adequate suction head is not available at the pumps' inlets, and specify pressure line filters capable of at least 10-micron filtration between the pump outlet and the rest of the hydraulic system. The system must have filters with relief-check, by-pass valve and visual clogged filter indicators. Specify a remote sensing pressure switch to indicate a clogged filter. The relief-check, bypass-valve lines must also be filtered.

C. Hydraulic Fluids: Ensure that the manufacturers of the major hydraulic components used in the bridge approve the hydraulic fluid specified for use.

## 8.8 ELECTRICAL SYSTEMS [LRFD-MHBD 8]

### 8.8.1 Electrical Service [LRFD-MHBD 8.3]

A. Wherever possible, design bridge electrical service for 277/480 V, three-phase, "wye."

| **Modification for Non-Conventional Projects:** |
| --- |
| Delete ***SDG*** 8.8.1.A and see the RFP for requirements. |

B. Size feeders to limit voltage drop to not more than 5% from point of service to farthest load.

C. Do not apply a diversity factor when calculating loads.

D. Provide calculations for transformer and motor inrush current, short circuit currents, and voltage drop.

### 8.8.2 Conductors [LRFD-MHBD 8.9]

A. Single conductor stranded insulated wire. Specify XHHW-2 rated 600 VAC. Specify USE-2, or RHW-2 insulated wire for incoming services. Use 75° C to calculate allowable ampacities.

B. Do not specify aluminum conductors of any size. Do not specify solid copper conductors.

C. Do not specify wire smaller than No. 12 AWG for power and lighting circuits and smaller than No. 14 AWG for control wiring between cabinets, except that control wiring within a manufactured cabinet may be No. 16 AWG. Minimum field wire size is No. 12 AWG for control conductors between cabinets and field devices and No. 10 AWG for motor loads. Specify No. 14 AWG pigtails, no longer than 12 inches, for connection of field devices that cannot accommodate a No. 12 AWG wire. Use No. 10 AWG for 20 A, 120 VAC, branch circuit home runs longer than 75 feet, and for 20 A, 277 VAC, branch circuit home runs longer than 200 feet.

D. Do not show power and control conductors in the same conduit.

E. If more than three current carrying conductors are included in a conduit, derate the conductors per Table 310.15(B)(2)(a) of the NEC. For derating purposes, consider all power conductors, other than the ground conductors, as current carrying. This requirement does not apply to control wires.

### 8.8.3 Grounding and Lightning Protection [LRFD-MHBD 8.12 and 8.13]

A. Provide the following systems:

1. Lightning Protection System: Design per the requirements of NFPA 780 Lightning Protection Code. Protect the bridge with Class II materials.
2. Surge Suppression System: Design Transient Voltage Surge Suppressor (TVSS) system to protect all power, control, signaling, and communication circuits and all submarine conductors that enter or leave the control house. It is imperative to maintain proper segregation of protected and non-protected wiring within the Bridge Control House.
3. Grounding and Bonding System: Bond together all equipment installed on the bridge/project by means of a copper bonding conductor running the entire length of the project (Traffic Light to Traffic Light). All metal bridge components (i.e., handrail, roadway light poles, traffic gate housings, leafs, etc.) will be connected to the copper-bonding conductor. The copper-bonding conductor must remain continuous across the channel by means of the submarine bonding cable.

B. Require earth grounds at regular intervals with no less than two driven grounds at each pier and one driven ground at each overhead traffic light structure and traffic gate.

C. All main connections to the copper-bonding conductor must be cadwelded.

D. In areas where the copper-bonding conductor is accessible to non-authorized personnel, enclose in Schedule 80 PVC conduit with stainless steel supports every 5 feet.

### 8.8.4 Conduits [LRFD-MHBD 8.10]

A. Do not specify aluminum, IMC, or EMT conduits. Specify conduit types as follows:

1. One inch minimum size Schedule 80 PVC for underground installations and in slab above grade (embedded)
2. One inch minimum diameter size rigid galvanized steel (PVC coated) for outdoor locations, above grade, exposed (leafs) and exposed in dry locations (in pier, control house)
3. 3/4 inch minimum size Schedule 80 PVC for wet and damp locations (fender)

4. Schedule 80 HDPE conduit for submarine cable installation only, UL listed for 600 V electrical applications
5. 3/4 inch minimum diameter (nominal size) liquid-tight flexible metal conduit for the connection of motors, limit switches, and other devices that need to be periodically adjusted.
6. Limit liquid-tight flexible metal conduit to 2 feet in length and specify a bonding jumper.

B. Specify conduit supports at no more than 5 foot spacing.

C. Show no more than the equivalent of three 90-degree bends between boxes.

### 8.8.5 Service Lights [LRFD-MHBD 8.11]

Provide minimum of 20 fc in all areas of the machinery platform.

### 8.8.6 Motor Controls [LRFD-MHBD 8.6]

A. Specify full-size NEMA rated starters. Do not use IEC starters unless space constraints require their use, and then, only by obtaining prior approval from the SDO.

B. Provide seal-in functions at starters only using auxiliary starter contacts, do not use separate relays or PLC outputs.

C. Do not include panelboards and transformers in the Motor Control Center (MCC) unless space constraints require it, and then, only by obtaining prior approval from the SDO.

D. Provide local disconnect switches for all motors per the requirement of the NEC.

1. For main drive motors 75 hp or larger, connected to an AC or DC variable speed controller, a local disconnect is not required provided that the controller is equipped with a disconnecting means, operable without opening the controller door, capable of being locked in the open position.
2. Provide a permanent sign or placard, close to the motor, indicating the location of the controller.

E. Never directly connect a PLC output to a motor starter.

F. See ***SDG*** 8.2.9 Local Switching for more requirements.

### 8.8.7 Alternating Current Motors [LRFD-MHBD 8.5]

Size and select motors per ***LRFD-MHBD*** requirements. On hydraulic systems, provide 25% spare motor capacity. Specify motors that comply with the following requirements:

A. Design Criteria for Start-Ups: 12 per hour, 2 per ten-minute period.

B. Power Output, Locked Rotor Torque, Breakdown or Pullout Torque: NEMA Design B Characteristics.

C. Testing Procedure: ANSI/IEEE 112, Test Method B. Load test motors to determine freedom from electrical or mechanical defects and compliance with performance data.

D. Motor Frames: NEMA Standard T-frames of steel or cast iron (no aluminum frames allowed) with end brackets of cast iron with steel inserts. Motors 10 Hp and larger must be TEFC.

E. Thermistor System (Motor Sizes 25 Hp and Larger): Three PTC thermistors embedded in motor windings and epoxy encapsulated solid-state control relay for wiring into motor starter.

F. Bearings: Grease-lubricated, anti-friction ball bearings with housings equipped with plugged provision for relubrication, rated for minimum AFBMA 9, L-10 life of 20,000 hours. Calculate bearing load with NEMA minimum V-belt pulley with belt centerline at end of NEMA standard shaft extension. Stamp bearing sizes on nameplate.

G. Nominal Efficiency: Meet or exceed values in ANSI Schedules at full load and rated voltage when tested in accordance with ANSI/IEEE 112.

H. Nominal Power Factor: Meet or exceed values in ANSI Schedules at full load and rated voltage when tested in accordance with ANSI/IEEE 112.

I. Insulation System: NEMA Class F or better.

J. Service Factor: 1.0.

### 8.8.8 Electrical Control [LRFD-MHBD 8.4]

A. Design an integrated control system. Develop a control interface that matches the operating needs and skill levels of the bridge operators and maintenance personnel that will be using the system. Design a system configuration, select control devices, and program the Programmable Logic Controller (PLC) to produce the desired interface that will comply with the Operation Sequence furnished by the SDO.

| **Modification for Non-Conventional Projects:** |
| --- |
| Delete ***SDG*** 8.8.8.A and insert the following:<br>A. Design an integrated control system. Develop a control interface that is easy to operate. See the RFP for additional requirements. |

B. Do not specify touch-screen controls for permanent installations.

C. Ensure that no control component or electrical equipment requires manual reset after a power failure. Ensure all systems return to normal status when power is restored.

D. Specify an uninterruptible power supply to power the bridge control system.

E. EMERGENCY-STOP (E-STOP) stops all machinery in the quickest possible time but in no less than 3 seconds main drives only. In an emergency, hit this button to stop machinery and prevent damage or injury. Specify a button resettable by twisting clockwise (or counterclockwise) to release to normal up position.

F. At a minimum, provide alarms for the following events:

1. All bridge control failures.
2. All generator/Automatic Transfer Switch failures.
3. All traffic signal failures.
4. All navigation light failures.
5. All traffic gate failures.
6. All span-lock failures.
7. All brake failures (if applicable).
8. All leaf limit switch failures.
9. All drive failures; including motor high temperature (motors larger than 25 Hp) and all hydraulic system failures.
10. Near and far-leaf total openings (not an alarm but part of the monitoring function).
11. All uses of bypass functions, type and time (not an alarm but part of the monitoring function).

G. See Chapter 8 Appendices for Movable Bridge Alarms, Sequence, Sequence Flowcharts, Limit Switches, Indicating Lights, and Naming Conventions.

## 8.8.9 Programmable Logic Controllers [LRFD-MHBD 8.4.2.3]

Refer to the Technical Special Provisions issued by the SDO.

| **Modification for Non-Conventional Projects:** |
| --- |
| Delete ***SDG*** 8.8.9 and see the RFP for requirements. |

## 8.8.10 Limit and Seating Switches [LRFD-MHBD 8.4.4]

A. Design each movable leaf with FULL-CLOSED, NEAR-CLOSED, NEAR-OPEN, FULL-OPEN, and FULL-SEATED limit switches. Specify NEMA 4, corrosion resistant metallic housings which have a high degree of electrical noise immunity and a wide operating range. Specify that NEAR-OPEN and NEAR-CLOSED limit switches be mounted, initially, approximately eight degrees from FULL-OPEN and FULL-CLOSED, respectively. Final adjustment of NEAR-OPEN and NEAR-CLOSED will depend upon bridge configuration, drive machinery, and bridge operation.

*Commentary: The FULL-CLOSED switch controls the drive stop and the FULL-SEATED switch is the safety interlock to allow driving the locks.*

B. Do not connect limit switches in series between different drives. Connect each limit switch to a relay coil (use interpose relays to connect to a PLC input.) Provide position transmitter (potentiometer or other type) to drive leaf position indicators on control console. The position transmitter will also provide a signal to the PLC to use

as a reference to determine leaf limit switch failure. Connect limit switches in the following configurations:

Traffic Gates: End-Of-Travel configuration.

Span Locks: End-Of-Travel configuration.

Leaf(s): End-Of-Travel configuration.

Safety Interlocks: Indicating configuration.

*Commentary: "End-Of-Travel" is a NOHC (Normally Open Held Closed) limit switch that opens to stop motion and "Indicating" is a NO (Normally Open) limit switch that closes to indicate position has been reached.*

C. Do not use electronic limit switches. Plunger type switches are optional.

D. Show End-Of-Travel limit switches connected directly to the HAND-OFF-AUTO switches on the MCC so that manual operation of equipment from the MCC is possible independent of the condition of the control system.

## 8.8.11 Safety Interlocking [LRFD-MHBD 8.4.1]

A. Traffic Lights: Traffic gates LOWER permissive is not enabled until traffic lights RED. Provide bypass capability labeled TRAFFIC LIGHT BYPASS to allow traffic gates LOWER without traffic lights RED.

B. Traffic Gates:

1. Bridge Opening: Span locks PULL permissive is not enabled until all traffic gates (on that span) are fully down (or TRAFFIC GATE BYPASS has been engaged).
2. Bridge Closing: Traffic lights GREEN permissive is not enabled until all traffic gates (on that span) are fully raised (or TRAFFIC GATE BYPASS has been engaged).
3. Provide bypass capability labeled TRAFFIC GATE BYPASS to allow span lock PULL without all traffic gates LOWERED or traffic lights GREEN without all traffic gates RAISED.

C. Span Locks:

1. Bridge Opening: Leaf RAISE permissive is not enabled until all span locks are fully pulled (or SPAN LOCK BYPASS has been engaged).
2. Bridge Closing: Traffic gate RAISE permissive is not enabled until all span locks are fully driven (or SPAN LOCK BYPASS has been engaged).
3. Provide bypass capability and label SPAN LOCK BYPASS to allow leaf RAISE without all span locks pulled or traffic gate RAISE without all span locks DRIVEN.

D. Leaf:

1. Span locks DRIVE is not enabled until leaf (s) is (are) FULLY SEATED (as indicated by the FULLY SEATED switch).
2. Provide bypass capability and label LEAF BYPASS to allow span lock DRIVE without leaf (s) FULLY SEATED.

E. Any traffic gate arm moving off the full upright position will start RED flashing lights on the gate arm and will turn corresponding traffic lights RED, independent of the condition of the control system.

## 8.8.12 Instruments [LRFD-MHBD 8.4.5]

Provide, on the control console, wattmeter for each drive motor or HPU pump motor and provide leaf position indication for each leaf.

## 8.8.13 Control Console [LRFD-MHBD 8.4.6]

A. Specify a Control Console that contains the necessary switches and indicators to perform semi-automatic and manual operations as required by the standard FDOT Basic Sequence Diagram.

B. Ensure all wiring entering or leaving the Control Console is broken and terminated at terminal blocks.

C. Do not specify components other than push buttons, selector switches, indicating lights, terminal blocks, etc., in the Control Console.

## 8.8.14 Communications Systems

Design and specify a Public Address System, an Intercom System, and a Marine Radio System for each movable bridge. The three systems must work independent of each other and meet the following criteria:

A. Public Address System: One-way handset communication from the operators console to multiple zones (marine channel, roadway, machinery platforms, and other rooms). Specify an all call feature so that the operator may call all zones at once. Specify and detail loudspeakers mounted on the pier wall facing in both directions of the channel, one loudspeaker mounted at each overhead traffic signal, facing the oncoming gate, and loudspeakers at opposite ends of the machinery platform.

B. Intercom System: Specify a two-way communication system that works similar to an office telephone system with station-to-station calling from any station on the system and all call to all stations on the system from the main intercom panel. Each station must have a hands free capability. A call initiated from one station to another must open a channel and give a tone at the receiving end. The receiving party must have the capability of answering the call by speaking into the open speaker channel, or by picking up the local receiver and speaking into it. All intercom equipment must be capable of operation in a high noise, salt air environment. Specify a handset mounted adjacent to the control console, in each room on the bridge and on each machinery platform.

C. Marine Radio System: Hand held, portable, operable on or off the charger, tuned to the proper channels, and a 120- volt charger located adjacent to the control console.

## 8.8.15 Navigation Lights [LRFD-MHBD 1.4.4.6.2]

A. Design a complete navigation light and aids system in accordance with all local and federal requirements. Comply with the latest edition of the Code of Federal Regulations (CFR) Title 33, Chapter 1, Part 118, and Coast Guard Requirements.

B. Specify LED array fixtures with a minimum of 50,000 hour life on fenders and center of channel positions to reduce effort required for maintenance of navigation lights.

## 8.8.16 Electrical Connections between Fixed and Moving Parts [LRFD-MHBD 8.9.5]

Specify extra flexible wire or cable.

## 8.8.17 Electrical Connections across the Navigable Channel [LRFD-MHBD 8.9.7]

A. Specify a bridge submarine cable assembly and bridge submarine cable termination cabinets complete with disconnect type terminal blocks.

   1. Show as many conduits as required plus two spare.
   2. Minimum conductor size for power is No. 10 AWG.
   3. Minimum conductor size for controls is No. 12 AWG. Maximum voltage allowed in a control conductor is 120 V.

B. Provide as many conductors as required plus 25% spares. Do not mix power and controls conductors in the same conduit.

C. Ground cable is single conductor No. 4/0 AWG.

D. Specify NEMA Type 4X, type 316 stainless steel bridge submarine cable termination cabinets, of ample size per the NEC, and arranged so that terminal strips, supports and other devices are readily accessible for maintenance, repair, and replacement.

E. Show the conduits across the channel permanently buried in a trench. Show power, signal and control, ground, and spare conduits in the same trench.

## 8.8.18 Engine Generators [LRFD-MHBD 8.3.9]

A. Design per the requirements of the latest edition of NFPA 110. Specify only diesel-fueled generators. Specify day tank with a minimum 10-gallon capacity. Do not use the day tank capacity as part of the main tank capacity. Submit calculations justifying recommended fuel tank size.

B. New Bridges:

   1. Provide two generators: Main Generator to power leaf drives and House Generator to power "house" loads.

*Commentary: Bridges are requiring bigger generators to operate because of the increase in main drive power requirements. It is not cost effective to run these generators continuously to power miscellaneous loads and generator manufacturers do not recommend running diesel generators at low loads for extended periods.*

2. Size Main Generator with enough capacity to open one side of the channel (one side of the bridge) at a time. Main Generator to run during bridge openings only.
3. Size House Generator to power the house loads like traffic lights, navigation lights, control house air conditioner, and house lights. House Generator to run continuously during power outage and is inhibited from transferring to the 480-volt bus when the Main Generator is running.
4. Size the fuel tank to hold enough fuel to run the Main Generator, at 100% load, for 12 hours and the House Generator, at 75% load, for 72 hours (minimum 50 gallons).

C. Rehabilitations:

1. Size generator so that one side of the channel (one side of the bridge) can be opened at a time concurrent with traffic lights, navigation lights, control house air conditioner(s), and house lights.
2. Size the fuel tank to hold enough fuel to run the generator, at 100% load, for 24 hours (minimum 50 gallons)

## 8.8.19 Automatic Transfer Switch [LRFD-MHBD 8.3.8]

A. Design switch in conformance with the requirements of the latest edition of NFPA 110.

B. Specify Automatic Transfer Switch with engine generator. Specify an Automatic Transfer Switch rated to protect all types of loads, inductive and resistive, from loss of continuity of power, without de-rating, either open or enclosed.

C. Specify withstand, closing, and interrupting ratings sufficient for voltage of the system and the available short circuit at the point of application on the drawings. Provide short circuit calculations to justify ATS proposed.

## 8.8.20 Video Equipment

A. Cameras: Specify cameras as needed to provide a full view of both vehicular and pedestrian traffic in each direction and at channel as needed where view is limited. Pay particular attention to sidewalk areas, directly under balconies, that cannot be seen from inside the house.

B. Monitors: Two; one showing all cameras (spilt screen) and the second showing full view of selected camera.

C. Require 30-day recording capabilities for each camera.

## 8.9 CONTROL HOUSE

A. A control house is the facility designed as part of a movable bridge and occupied by the bridge operator. This facility houses the business functions, spaces, and mechanical & electrical systems required to operate the bridge. This includes equipment such as pumps, motors, generators, etc. and systems such as controls, lighting, plumbing, and HVAC.

B. The design of new control houses and renovation of existing control houses must comply with the requirements of the FLORIDA BUILDING CODE (FBC), the FLORIDA ACCESSIBILITY CODE (FAC) and the LIFE SAFETY CODE (LSC).

*Commentary: Under the 2010* ***ADA Standards for Accessible Design (ADA)*** *and the 2012* ***FAC****, which adopted and modified the 2010* ***ADA****, accessibility is not required for movable bridge control houses per* ***ADA*** *Section 203 and* ***FAC*** *Section 201.*

C. Operation areas contain business functions. Equipment areas contain mechanical and electrical equipment.

### 8.9.1 General

A. These Architectural guidelines address the design of new control houses but many items apply to renovations of existing houses.

B. The operator must be able to see and hear all traffic (vehicular, pedestrian and marine) from the primary workstation in the operation area.

C. Heat gain can be a problem. Where sight considerations permit, detail insulated walls as a buffer against heat gain. Provide 4 to 5 foot roof overhangs.

D. The preferred wall construction is reinforced concrete; minimum six inches thick with architectural treatments such as fluted corner pilasters, arches, frieze ornamentation, horizontal banding or other relief to blend with local design considerations.

E. Finish exterior of house with stucco, Class V coating or spray-on granite or cast stone.

F. Design the Bridge Control House with a minimum of 250 square feet of usable floor space. This allows enough room for a toilet, kitchenette, and coat/mop closet as well as wall-hung desk and control console. Add additional interior square footage for stairwells, or place stairs on exterior of structure.

G. Show windowsills at no more than 34 inches from the floor. This allows for operator vision when seated in a standard task chair. Ensure that window mullions will not be so deep as to create a blind spot when trying to observe the sidewalks or traffic gates.

H. Consider lines of sight from control station when determining sizing, location and spacing of columns. Ensure column size and layout do not limit lines of sight between control house and all traffic (vehicular, pedestrian and marine). The operator must be able to view all traffic from the control station.

I. For operator standing at control console, verify sight lines to:
   1. Traffic gates for both directions of vehicular traffic.
   2. Marine traffic for both directions of the navigable channel.
   3. Pedestrian traffic (sidewalks), pedestrian gates and other locations where pedestrians normally stop.
   4. Under side of bridge, at channel.

J. For windows installed in the restroom, install the bottom of window a minimum of 60" above finished floor.

K. Specify the control house exterior wall framing and surfaces to be bullet resistant; capable of meeting the standards of UL 752, Level 2 (357 magnum).

### 8.9.2 Floor Tile

A. Specify non-skid quarry tile on operator's level.

B. Do not specify vinyl floor tiles or sheet goods.

### 8.9.3 Epoxy Flooring

A. Specify fluid applied non-slip epoxy flooring for electrical rooms, machinery rooms and machinery platforms.

B. Ensure that the products used are guaranteed by the manufacturer and are installed per their instructions.

C. Do not specify painted floors.

### 8.9.4 Roof

A. Do not specify flat roofs, "built-up" roofs, etc.

B. Design: Hip roof with minimum 4:12 pitch and 4 to 5 foot overhang.

C. Roof Material: Specify and detail either standing seam 18 gauge metal or glazed clay tiles. Note: many of the coastal environments will void the manufacturer's warranty for metal. Before specifying a metal roof determine if the manufacturer will warrant the roof in the proposed environment, if not, use tiles meeting or exceeding the Grade I requirements of ASTM C 1167.

D. Soffit: Specify ventilated aluminum.

E. Fascia: Specify aluminum, vinyl or stucco.

F. Design for uplift forces per Florida Building Code and applicable wind speeds on roof, roof framing, decking, fascia, soffit, anchors and other components. Include roof load and uplift calculations in 60% submittal.

| **Modification for Non-Conventional Projects:** |
| --- |
| Delete ***SDG*** 8.9.4.F and insert the following:<br>F. Design for uplift forces per Florida Building Code and applicable wind speeds on roof, roof framing, decking, fascia, soffit, anchors and other components. Include roof load and uplift calculations in the 60 percent component superstructure submittal. These calculations shall be included in the 90 percent component superstructure submittal when a 60 percent submittal is not required in the RFP. |

G. During design, consider underlayment, eave, and ridge protection, nailers and associated metal flashing.

H. Provide for concealed lightning protection down conductors.

## 8.9.5 Windows

A. Specify windows complying with the American Architectural Manufacturers Association standards (AAMA) for heavy commercial windows.

B. Specify double-hung, marine glazed heavy commercial (DHHC) type extruded aluminum windows.

C. Specify all exterior windows as meeting, or exceeding, the requirements of the Florida Building Code's Wind-Born Debris Region and wind speed requirements (see figure 1609 of the Florida Building Code). Ensure all glazing meets the requirements of the Large Missile Test.

*Commentary: District Structures Maintenance Engineer can require the use of frames and glazing meeting the ballistic standards of UL 752, Level 2 (.357 magnum).*

| **Modification for Non-Conventional Projects:** |
| --- |
| Delete the Commentary for ***SDG*** 8.9.5.C and see the RFP for requirements. |

D. Specify counter balanced windows to provide 60% lift assistance.

E. Specify operating hardware and insect screens.

F. Specify perimeter sealant.

G. Structural Loads: Design to ASTM E330-70, with 60 lb/sq ft exterior uniform load and 60 lb/sq ft interior load applied for 10 seconds with no glass breakage, permanent damage to fasteners, hardware parts, actuating mechanisms, or any other damage.

H. Air Leakage: No more than 0.35 cfm/min/sq ft of wall area, measured at a reference differential pressure across assembly of 1.57 psf as measured in accordance with ASTM E283.

I. Water Leakage: None, when measured in accordance with ASTM E331 with a test pressure of 6 psf applied at 5 gallons per hour per square ft.

J. Locate windows to allow line-of-sight to all marine, vehicular and pedestrian traffic from both standing and seated positions at the control console.

### 8.9.6 Doors and Hardware

A. Specify and detail armored aluminum entry doors. All exterior doors, frames and glazing ballistics meeting the standards of UL 752, Level 2 (357 magnum).

B. Interior Doors:
   1. Passage - Solid core or solid wood.
   2. Closets - Louvered.

C. Hardware:
   1. Specify corrosion resistant, heavy-duty, commercial ball-bearing hinges and levered locksets and dead bolts for entry doors.
   2. Specify adjustable thresholds, weather-stripping, seals and door gaskets.
   3. Specify interior locksets.
   4. Call for all locks keyed alike and spare keys.
   5. Require the use of panic bar hardware for the electrical room door and have doors swing out.

D. Do not specify the use of a card reader.

### 8.9.7 Pipe and Fittings

A. Specify pipe fittings, valves, and corporation stops, etc.

B. Show hose bib outside the control house and at each machinery platform.

C. Specify wall-mounted, corrosion resistant (fiberglass or plastic) hose hanger and 50 foot, nylon reinforced, 3/4 inch garden hose. Mount in a secure area.

D. Specify stops at all plumbing fixtures, primed floor drains, air traps to eliminate/reduce water hammer, and ice maker supply line.

### 8.9.8 Site Water Lines

A. Specify pipe and fittings for site water lines including domestic water line, valves, fire hydrants and domestic water hydrants. Size water lines to provide adequate water pressure at the bridge. Provide detailed drawings to show location and extent of work.

B. Specify disinfection of potable water distribution system and all water lines per the requirements of American Water Works Association (AWWA).

### 8.9.9 Site Sanitary Sewage System

A. Gravity lines to manholes are preferred. Avoid the use of lift stations. If lift stations are required, consider daily flows as well as pump cycle times in the design. Low daily flows result in long cycle times and associated odor problems. Include pump and flow calculations and assumptions in 60% submittal.

| **Modification for Non-Conventional Projects:** |
| --- |
| Delete ***SDG*** 8.9.9.A and insert the following:<br>A. Gravity lines to manholes are preferred. Avoid the use of lift stations. If lift stations are required, consider daily flows as well as pump cycle times in the design. Low daily flows result in long cycle times and associated odor problems. Include pump and flow calculations and assumptions in the 60 percent component superstructure submittal. These calculations shall be included in the 90 percent component superstructure submittal when a 60 percent submittal is not required in the RFP. |

B. For bridges not served by a local utility company, where connection is prohibitively expensive, and where septic tanks are not permitted or practical, coast guard approved marine sanitation devices are acceptable.

### 8.9.10 Toilet and Bath Accessories

A. Specify a mirror, soap dispenser, tissue holder, paper towel dispenser, and a waste paper basket for each bathroom.

B. Specify a bathroom exhaust fan.

C. Specify porcelain water closet and lavatory.

### 8.9.11 Plumbing Fixtures

A. Specify a single bowl, stainless steel, self-rimming kitchen counter sink, a sink faucet, a lavatory, a lavatory faucet with lever handles, and an accessible height elongated toilet.

B. Do not specify ultra-low flow fixtures unless the bridge has a marine digester system.

C. Specify all trim, stops, drains, tailpieces, etc. for each fixture.

D. Specify instant recovery water heater for kitchen sink and lavatory.

### 8.9.12 Heating, Ventilating and Air Conditioning

A. A central split unit is preferred but multiple, packaged units may be acceptable for rehabs. Design HVAC system with indoor air handler, ductwork and outdoor unit(s).

B. Perform load calculations and design the system accordingly. Include load calculations in 60% submittal.

| **Modification for Non-Conventional Projects:** |
| --- |
| Delete ***SDG*** 8.9.12.B and insert the following:<br>B. Perform load calculations and design the system accordingly. Include load calculations in 60 percent component superstructure submittal. These calculations shall be included in the 90 percent component superstructure submittal when a 60 percent submittal is not required in the RFP. |

C. For highly corrosive environments, use corrosive resistant equipment.

D. Specify packaged terminal air conditioning units.

E. Specify packaged terminal heat pump units.

F. Specify and detail wall sleeves and louvers.

G. Specify controls.

H. Specify and show ceiling fans on floor plan.

I. Specify ventilation equipment for machinery levels and attic.

## 8.9.13 Interior Luminaires

A. Specify energy efficient fixtures.

B. Avoid the use of heat producing fixtures.

C. Pay particular attention when designing the lighting in the control house to reduce the inability to see out of the windows at night when the interior lights are on.

## 8.9.14 Stairs, Steps and Ladders

A. Detail stair treads at least 3 feet wide and comply with NFPA 101 - Life Safety Code and Florida Building Code concerning riser and tread dimensions. Comply with OSHA requirements. The preferred tread is skid-resistant open grating. Avoid the use of ladders or stair ladders.

B. Stairs and landings may be on the exterior of the house.

*Commentary: This reduces heating and cooling requirements as well as providing more usable floor space.*

C. For interior stairwells, spiral stairs (Minimum 6 foot diameter) are acceptable although not preferred. Pay special attention to clearances for moving equipment into or out of a control house. Design stair assembly to support live load of 100-lbs/sq ft with deflection of stringer not to exceed 1/180 of span. Include calculations in the 60% submittal.

**Modification for Non-Conventional Projects:**

Delete ***SDG*** 8.9.14.C and insert the following:

C. For interior stairwells, spiral stairs (Minimum 6 foot diameter) are acceptable although not preferred. Pay special attention to clearances for moving equipment into or out of a control house. Design stair assembly to support live load of 100 lbs/sq ft with deflection of stringer not to exceed 1/180 of span. Include calculations in the 60 percent component superstructure submittal. These calculations shall be included in the 90 percent component superstructure submittal when a 60 percent submittal is not required in the RFP.

D. In situations where there is no space for stairs, use ship ladders, as a last option, in applications limited to a vertical height of 48-inches.

## 8.9.15 Handrails, Guards, Railing and Grating

A. Specify steel or aluminum pipe handrails, guards and railing with corrosion-resistant coatings or treatment.

B. Exterior railing must meet the requirements of the applicable ***Design Standards*** Index 850 Series or 860 Series and the appropriate ***Instructions for Design Standards (IDS)***.

C. Interior railing must meet the requirements of the Florida Building Code (FBC) and Life Safety Code (LSC) for size, height and strength.

D. Handrails attached to guards or railing must meet the requirements of the FBC and LSC for size, strength and continuity. Continuous, smooth pipe is required for handrails.

E. Welded pipe rails are not preferred for guards and railing.

F. Include structural calculations in 60% submittal.

**Modification for Non-Conventional Projects:**

Delete ***SDG*** 8.9.15.F and insert the following:

F. Include structural calculations in the 60 percent component superstructure submittal. These calculations shall be included in the 90 percent component superstructure submittal when a 60 percent submittal is not required in the RFP.

G. Specify Grating and Floor Plates which have skid resistant open grating, except at control level.

## 8.9.16 Framing and Sheathing

Include a specification section for the following items if used:

A. Structural floor, wall, and roof framing.

B. Built-up structural beams and columns.

C. Diaphragm trusses fabricated on site.

D. Prefabricated, engineered trusses.

E. Wall and roof sheathing.

F. Sill gaskets and flashing.

G. Preservative treatment of wood.

H. Fire retardant treatment of wood.

I. Telephone and electrical panel back boards.

J. Concealed wood blocking for support of toilet and bath accessories, wall cabinets, and wood trim.

K. All other sections applicable to control house design and construction.

## 8.9.17 Desktop and Cabinet

A. Specify and detail a wall-hung desktop with drawer mounted 29.5-inches above finished floor. Show desktop.

B. Specify and detail a minimum 7 feet of 36-inch base cabinets and 7 feet of 24-inch or 36-inch wall cabinets.

C. Specify cabinet hardware and solid-surfacing material counter-tops and desktop.

## 8.9.18 Insulation

A. Design the control house so that insulation meets the following requirements: Walls - R19, Roof assembly - R30.

B. Specify rigid insulation for underside of floor slabs, exterior walls, and between floors separating conditioned and unconditioned spaces.

C. Specify batt Insulation in ceiling construction and for filling perimeter and door shim spaces, crevices in exterior wall and roof.

## 8.9.19 Fire-Stopping

Specify, design, and detail fire stopping for wall and floor penetrations.

A. Main Floor Walls: 1 Hour.

B. Stair Walls (Interior): 2 Hours.

C. Interior Partitions: 3/4 Hour.

## 8.9.20 Veneer Plaster (Interior Walls)

Specify 1/4-inch plaster veneer over 1/2-inch moisture-resistant gypsum wallboard (blueboard), masonry and concrete surfaces.

## 8.9.21 Gypsum Board (Interior Walls)

A. Specify 1/2-inch blueboard for plaster veneer.

B. Specify 1/2-inch fiberglass reinforced cement backer board for tile.

## 8.9.22 Painting

Specify paint for woodwork and walls.

## 8.9.23 Wall Louvers

A. Specify rainproof intake and exhaust louvers and size to provide required free area.

B. Design with minimum 40% free area to permit passage of air at a velocity of 335 ft/min without blade vibration or noise with maximum static pressure loss of 0.25 inches measured at 375 ft/m in.

## 8.9.24 Equipment and Appliances

A. Specify a shelf mounted or built-in 1.5 cubic foot microwave with digital keypad and user's manual.

B. Specify an under counter refrigerator with user's manual.

C. Specify a Type 10-ABC fire extinguisher for each room.

## 8.9.25 Furnishings

A. Specify two, gas lift, front-tilt task chairs.

B. Provide one R5 cork bulletin board.

C. Specify window treatment (blinds or shades).

## 8.9.26 Fire and Security Alarm System

A. Specify smoke detection in each of the machinery areas, and in each room of the control house.

B. Specify audible and visual alarm devices in each of the machinery areas and in each room of the control house.

# 9 BDR COST ESTIMATING

## 9.1 GENERAL

| **Modification for Non-Conventional Projects:** |
| --- |
| Delete ***SDG*** Chapter 9. |

A. The purpose of the Bridge Development Report (BDR) is to select the most cost efficient and appropriate structure type for the site under consideration. This chapter describes a three-step process to estimate bridge costs based on FDOT historical bid data. The first step is to utilize the average unit material costs to develop an estimate based on the completed preliminary design. The second step is to adjust the total bridge cost for the unique site conditions by use of the site adjustment factors. The third and final step is to review the computed total bridge cost on a cost per square foot basis and compare this cost against the historical cost range for similar structure types. This process should produce a reasonably accurate cost estimate. However, if a site has a set of odd circumstances, which will affect the bridge cost, account for these unique site conditions in the estimate. If the estimated cost is outside the cost range in step three, provide documentation supporting the variance in cost.

B. The three-step process described in this chapter for conventional alternates is not suitable for cost estimating structure types without repeatable bid history. Estimates for unique structures such as movable, cable stayed, cast-in-place on form travelers, arches and tunnels should based on construction time, labor, materials, and equipment.

C. Click to view or download a BDR bridge cost estimate spreadsheet for conventional alternates.

D. When prefabricated alternates are required to be investigated during the BDR phase per the feasibility questions and assessment matrix of ***PPM***, Volume 1, Section 26.9.2.9, both direct costs (hard dollars) and indirect costs (soft dollars) are required to be reported for each alternate. An assessment matrix methodology allows for alternate selection based on less than perfect knowledge.

E. To date, the FDOT does not have sufficient historical bid data for prefabricated bridge alternates in order to develop reasonable cost estimates from average unit material costs. To fill this gap, the Structures Design Office has developed several training videos for the purpose of educating designers on factors for consideration related to use of Prefabricated Bridge Elements and Systems (PBES) for Accelerated Bridge Construction (ABC). Sample contractor estimates are provided to show how project costs may be developed to compare conventional construction methods versus a prefabricated ABC approach.

F. These training videos have been posted on a website along with notification of upcoming developments and helpful links to related external websites. The Department's Structures Design Office website for Every Day Counts can be viewed at: http://www.fdot.gov/structures/edc/.

## 9.2 BDR BRIDGE COST ESTIMATING

The applicability of this three-step process is explained in the general section. The process stated below is developed for estimating the bridge cost after the completion of the preliminary design, which includes member selection, member size and member reinforcing. This process will develop costs for the bridge superstructure and substructure from beginning to end bridge. Costs for all other items including but not limited to the following are excluded from the costs provided in this chapter: mobilization, operation costs for existing bridge(s), removal of existing bridge or bridge fenders, lighting, walls, deck drainage systems, embankment; fenders, approach slabs, maintenance of traffic, load tests, and bank stabilization.

**Step One:**

Utilizing the costs provided herein, develop the cost estimate for each bridge type under consideration.

### 9.2.1 Substructure (Rev. 01/17)

A. Prestressed Concrete Piling; cost per linear foot (furnished and installed)

| Size of Piling | Driven Plumb or 1" Batter[1] | Driven Battered[1] |
|---|---|---|
| 18-inch w/ carbon steel strand[2] | $80 | $110 |
| 24-inch w/ carbon steel strand[2] | $90 | $130 |
| 30-inch w/ carbon steel strand[2] | $120 | $175 |
| 18-inch w/ CFRP or Stainless Steel Strand | $122 | $152 |
| 24-inch w/ CFRP or Stainless Steel Strand | $146 | $186 |
| 30-inch w/ CFRP or Stainless Steel Strand | $191 | $246 |

1 When silica fume, metakaolin or ultrafine fly ash is used, add $6 per LF to the piling cost.

2 When heavy mild steel reinforcing is used in the pile head, add $250.

B. Steel Piling: cost per linear foot (furnished and installed)

| | |
|---|---|
| 14 x 73 H Section | $70 |
| 14 x 89 H Section | $90 |
| 18" Pipe Pile | $95 |
| 20" Pipe Pile | $110 |
| 24" Pipe Pile | $140 |
| 30" Pipe Pile | $160 |

C. Drilled Shaft: total in-place cost per LF

| Diameter | 3 ft | 4 ft | 5 ft | 6 ft | 7 ft | 8 ft | 9 ft |
|---|---|---|---|---|---|---|---|
| On land with casing salvaged. | $450 | $550 | $600 | $680 | $825 | $1,550 | $1,800 |
| In water with casing salvaged. | $500 | $625 | $700 | $825 | $950 | $1,650 | $1,900 |
| In water with permanent casing. | $625 | $750 | $850 | $990 | $1,250 | $2,200 | $2,400 |

D. Cofferdam Footing (cofferdam and seal concrete*)

Prorate the cost provided herein based on area and depth of water. A cofferdam footing having the following attributes will cost $600,000.

Area: 63 ft x 37.25 ft. Depth of seal; 5 ft. Depth of water over the footing; 16 ft.

* Cost of seal concrete included in pay item 400-3-20 or 400-4-200.

E. Substructure Concrete: cost per cubic yard.

| | |
|---|---|
| Concrete: | $775 |
| Mass concrete: | $625 |
| Seal concrete: | $375 |

| | |
|---|---|
| Bulkhead Concrete: | $900 |
| Shell fill: | $30 |

For calcium nitrite, add $40 per cubic yard. (@ 4.5 gal per cubic yard)
For silica fume, metakaolin or ultrafine fly ash, add $40 per cubic yard. (@ 60 lbs. per cubic yard)

F. Reinforcing and Post-tensioning Steel

1. Carbon Reinforcing Steel; cost per pound: $0.90.
   Low-Carbon Chromium Reinforcing Steel; cost per pound: $1.25
   Stainless Reinforcing Steel; cost per pound: $4.00

2. Post-tensioning Steel; cost per pound.

| | |
|---|---|
| Strand | $4.00 |
| Bars | $6.00 |

G. Retaining Walls.

1. MSE Walls; cost per square foot

| | |
|---|---|
| Permanent | $28 |
| Temporary | $14 |

2. Sheet Pile Walls

| | | | |
|---|---|---|---|
| Prestressed concrete cost per linear foot: | 10" x 30" | | $120 |
| | 12" x 30" | | $130 |
| | 12" x 30" with FRP | | $265 |
| Steel cost per square foot: | Permanent | Cantilever | $30 |
| | | Anchored | $55[1] |
| | Temporary | Cantilever | $16 |
| | | Anchored | $35[1] |

1 Includes the cost of anchors, waler steel, miscellaneous steel for permanent/temp. walls and concrete face for permanent walls.

3. Soil Nail Wall with Permanent Facing; cost per square foot: $110

4. Traffic Railings with Junction Slabs; cost per linear foot

| | |
|---|---|
| 32" F Shape or Vertical Face | $225 |
| 42" F Shape or Vertical Face | $240 |

| | |
|---|---|
| 36" Single-Slope | $221 |
| 42" Single-Slope | $240 |

H. Noise Wall; Cost per square foot: $25

I. Box Culverts:

| | |
|---|---|
| Class II Concrete | $850 / cu. yd. |
| Class IV Concrete | $900 / cu. yd. |
| Carbon Reinforcing Steel | $1.00 / lb. |

### 9.2.2 Superstructure (Rev. 01/17)

A. Bearing Type

| | |
|---|---|
| 1. Neoprene Bearing Pads: | $900 per Cubic Foot |
| 2. Multirotational Bearings (Capacity in Kips) | Cost per Each |
| 1-250 | $6,000 |
| 251-500 | $7,000 |
| 501-750 | $8,000 |
| 751-1000 | $9,500 |
| 1001-1250 | $9,900 |
| 1251-1500 | $10,000 |
| 1501-1750 | $11,000 |
| 1751-2000 | $12,500 |
| >2000 | $15,000 |

B. Bridge Girders

1. Structural Steel; Cost per pound (includes coating costs.)

| | |
|---|---|
| Rolled wide flange sections; straight | $1.65 |
| Rolled wide flange sections; curved | $1.85 |
| Plate girders; straight | $1.65 |
| Plate girders; curved | $1.95 |
| Box girders; straight | $1.95 |
| Box girders; curved | $2.15 |

When uncoated weathering steel is used, reduce the price by $0.04 per pound. Inorganic zinc coating systems have an expected life cycle of 20 years.

2. Prestressed Concrete Girders and Slabs; cost per linear foot.

| | |
|---|---|
| Florida Inverted Tee; 16" | $110[1] |
| Florida Inverted Tee; 20" | $120 |
| Florida Inverted Tee; 24" | $130[1] |
| Truncated Florida-I Beam; 27" | $210 |
| Florida-U Beam; 48" | $650[1] |
| Florida-U Beam; 54" | $700 |
| Florida-U Beam; 63" | $750 |
| Florida-U Beam; 72" | $800 |

| | |
|---|---|
| Solid Flat Slab (<48”x12”) | $170 |
| Solid Flat Slab (<48”x15”) | $180 |
| Solid Flat Slab (48"x12") | $180 |
| Solid Flat Slab (48"x15") | $190 |
| Solid Flat Slab (60"x12") | $190 |
| Solid Flat Slab (60"x15") | $200 |
| Florida Slab Beam; 12" x 48" | $203[2] |
| Florida Slab Beam; 12" x 60" | $260[2] |
| Florida Slab Beam; 15" x 48" | $213[2] |
| Florida Slab Beam; 15" x 60" | $270[2] |
| Florida Slab Beam; 18" x 48" | $248[2] |
| Florida Slab Beam; 18" x 60" | $310[2] |
| AASHTO Type II Beam | $110 |
| Florida-I Beam; 36 | $220 |
| Florida-I Beam; 45 | $225 |
| Florida-I Beam; 54 | $240 |
| Florida-I Beam; 63 | $255 |
| Florida-I Beam; 72 | $270 |
| Florida-I Beam; 78 | $280 |
| Florida-I Beam; 84 | $295 |
| Florida-I Beam; 96 | $350 |
| Haunched Florida-I Beam; 78 | $750 |
| Haunched Florida-I Beam; 84 | $850 |

1 Price is based on ability to furnish products without any conversions of casting beds and without purchasing of forms. If these conditions do not exist, add the following costs: Florida Inverted Tee - $202,000; Florida-U Beam - $403,000

2 Interpolate between given prices for intermediate width FSBs.

C. Concrete

1. Cast-in-Place Superstructure Concrete; cost per cubic yard.

| | |
|---|---|
| Box Girder Concrete; straight | $950 |
| Box Girder Concrete; curved | $1,200 |
| Deck Concrete | $700 |
| Precast Deck Overlay Concrete Class IV | $700 |
| Approach Slab Concrete | $350 |
| Topping Concrete for slab beams and units (including cost of shrinkage reducing admixture) | $600 |

2. Concrete for Pre-cast Segmental Box Girders; cantilever construction; price per cubic yard. For deck area between 300,000 and 500,000 interpolate between the stated cost per cubic yard.

| | |
|---|---|
| Less than or equal to 300,000 SF | $1,250 |
| Less than or equal to 500,000 SF | $1,200 |
| Greater than 500,000 SF | $1,150 |

D. Reinforcing and Post-tensioning Steel

1. Carbon Reinforcing Steel; cost per pound: $0.95
   Low-Carbon Chromium Reinforcing Steel; cost per pound: $1.30
   Stainless Reinforcing Steel; cost per pound: $4.05
2. Post-tensioning Steel; cost per pound.

| | |
|---|---|
| Strand; longitudinal | $2.50 |
| Strand; transverse | $4.00 |
| Bars | $6.00 |

E. Railings and Expansion Joints

1. Traffic, Pedestrian and Bicycle Railings, cost per linear foot.

| | |
|---|---|
| Traffic Railings:[1] | |
| 32" F-Shape | $75 |
| 32" F-Shape Median | $86 |
| 42" F-Shape | $100 |
| 32" Vertical Face | $90 |
| 42" Vertical Face | $100 |
| 32" Corral | $130 |
| 36" Single-Slope Median | $93 |
| 36" Single-Slope | $71 |
| 42" Single-Slope | $97 |
| Thrie Beam Retrofit | $140 |
| Thrie Beam Panel Retrofit | $110 |
| Vertical Face Retrofit | $120 |
| Pedestrian/Bicycle Railings: | |
| Concrete Parapet (27”)[1] | $65 |
| Single Bullet Railing[1] | $27 |
| Double Bullet Railing[1] | $36 |
| Panel/Picket Railing (42") steel (Type 1 & 2) | $95 |
| Panel/Picket Railing (42") steel (Type 3-5) | $125 |
| Panel/Picket Railing (42") aluminum (Type 1 & 2) | $70 |
| Panel/Picket Railing (42") aluminum (Type 3-5) | $105 |
| Panel/Picket Railing (48") steel (Type 1 & 2) | $115 |
| Panel/Picket Railing (48") steel (Type 3-5) | $145 |
| Panel/Picket Railing (48") aluminum (Type 1 & 2) | $85 |
| Panel/Picket Railing (48") aluminum (Type 3-5) | $120 |

1 Combine cost of Bullet Railings with Concrete Parapet or Traffic Railing, as appropriate.

2. Expansion joints; cost per linear foot.

| | |
|---|---|
| Poured joint with backer rod | $40 |
| Strip seal | $350 |
| Finger joint < 6" | $850 |
| Finger joint > 6" | $1,500 |

| | |
|---|---|
| Modular 6" | $500 |
| Modular 8" | $700 |
| Modular 12" | $900 |

F. Miscellaneous

Bridge Deck Grooving - Deck Thickness Less Than 8.5"; cost per square yard: $8.00

Bridge Deck Grooving and Planing - Deck Thickness 8.5" or Greater; cost per square yard: $9.50

Detour Bridge; Cost per square foot: $55*

* Using FDOT supplied components. The cost is for the bridge proper (measured out-to-out) and does not include approach work, surfacing, or guardrail.

### 9.2.3 Design Aid for Determination of Reinforcing Steel

In the absence of better information, use the following quantities of reinforcing steel pounds per cubic yard of concrete.

| | |
|---|---|
| Pile abutments | 135 |
| Pile Bents | 145 |
| Single Column Piers; Tall (>25 ft) | 210 |
| Single Column Piers; Short (<25 ft) | 150 |
| Multiple Column Piers; Tall (>25 ft) | 215 |
| Multiple Column Piers; Short (<25 ft) | 195 |
| Bascule Piers | 110 |
| Decks; Standard | 205 |
| Decks; Isotropic | 125 |
| Concrete Box Girders; Pier Segment | 225 |
| Concrete Box Girders; Typical Segment | 165 |
| Cast-in-Place Flat Slabs (30 ft span x 15" deep) | 220 |
| Approach Slabs | 200 |

**Step Two:**

After developing the total cost estimate utilizing the unit cost, modify the cost to account for site condition variables. If appropriate, the cost will be modified by the following variables:

1. For construction over open water, floodplains that flood frequently or other similar areas, increase construction cost by 3 percent.
2. For construction over traffic and/or phased construction, i.e. construction requiring multiple phases to complete the entire cross section of a given bridge, add a 20 percent premium to the affected units of the structure.

**Step Three:**

The final step is a comparison of the cost estimate with historic bridge cost per square foot data. These total cost numbers are calculated exclusively for the bridge cost as defined in the General Section of this chapter. Price computed by Steps 1 and 2 should be generally within the range of cost of as supplied herein. If the cost falls outside the provided range, good justification must be provided.

| New Construction (2013 Cost Per Square Foot) | | |
|---|---|---|
| **Bridge Type** | **Low** | **High** |
| **Short Span Bridges:** | | |
| Reinforced Concrete Flat Slab Simple Span[1] | $115 | $160 |
| Pre-cast Concrete Slab Simple Span* | $110 | $200 |
| Reinforced Concrete Flat Slab Continuous Span* | NA | |
| **Medium Span Bridges:** | | |
| Concrete Deck/ Steel Girder - Simple Span* | $125 | $142 |
| Concrete Deck/ Steel Girder - Continuous Span* | $135 | $170 |
| Concrete Deck/ Pre-stressed Girder - Simple Span | $90 | $145 |
| Concrete Deck/ Pre-stressed Girder - Continuous Span | $95 | $211 |
| Concrete Deck/ Steel Box Girder – Span Range from 150' to 280' (for curvature, add a 15% premium) | $140 | $180 |
| Segmental Concrete Box Girders - Cantilever Construction, Span Range from 150' to 280' | $140 | $160 |
| Movable Bridge - Bascule Spans and Piers | $1,800 | $2,000 |
| **Demolition Cost:** | | |
| Typical | $35 | $60 |
| Bascule | $60 | $70 |
| **Project Type** | **Low** | **High** |
| Widening (Construction Only) | $85 | $160 |

1 Increase the cost by twenty percent for phased construction

## 9.3 HISTORICAL BRIDGE COSTS

The unadjusted bid cost for selected bridge projects are provided as a supplemental reference for estimating costs. The costs have been stripped of all supplemental items such as mobilization, so that only the superstructure and substructure cost remain.

### 9.3.1 Deck/Girder Bridges

| Project Name and Description | Letting Date | Deck Area (SF) | Cost per SF |
|---|---|---|---|
| Jensen Beach Causeway (890145) | 01/02 | 150,679<br>78” Bulb-tee, simple span | $59.00 |
| SR 417/Turnpike (770616) | 99/00 | 5,270<br>AASHTO Type VI | $50.39 |
| US 98/Thomas Dr.(460111) | 02/03 | 167,492<br>FI-U Beam | $66.50 |
| SR 704 over I-95 (930183 & 930210) | 97/98 | 14,804 each<br>AASHTO Type IV<br>Simple span | $60.66 |
| SR 700 over C-51 (930465) | 97/98 | 7,153<br>AASHTO Type II<br>Simple Span | $46.46 |
| SR 807 over C-51 (930474) | 98/99 | 11,493<br>AASHTO Type III<br>Simple Span | $48.77 |
| SR 222 over I-75 (260101) | 00/01 | 41,911<br>AASHTO Type III & IV | $63.59 |
| SR 166 over Chipola River (530170) | 00/01 | 31,598<br>AASHTO Type IV | $48.52 |
| SR 25 over Santa Fe River (260112) | 00/01 | 17,118<br>AASHTO Type IV | $52.87 |
| SR 71 over Cypress Creek (510062) | 00/01 | 12,565<br>AASHTO Type III | $49.64 |
| SR 10 over CSX RR (580175) | 00/01 | 12,041<br>AASHTO Type IV | $54.91 |
| SR 291 over Carpenter Creek (480194) | 00/01 | 7,760<br>AASHTO Type IV | $59.41 |
| SR 54 over Cypress Creek (140126) | 00/01 | 6,010<br>AASHTO Type III | $51.48 |
| SR 400 Overpass (750604) | 00/01 | 27,084<br>AASHTO Type VI | $48.15 |
| Palm Beach Airport Interchange over I-95 (930485) | 99/00 | 9,763 Steel | $85.50 |

| Project Name and Description | Letting Date | Deck Area (SF) | Cost per SF |
|---|---|---|---|
| Turnpike Overpass (770604) | 98/99 | 7,733 Steel<br>179' Simple Span | $79.20 |
| SR 686 (150241) | 99/00 | 63,387 Steel | $73.31 |
| SR 30 RR Overpass (480195 & 480196) | 00/01 | 6,994 each | $118.35 |
| SR 91 Overpass (over road) (750713) | 06/07 | 38,020<br>AASHTO Type V | $85.82 |
| SR 91 Overpass (over road) (754147) | 06/07 | 18,785 Steel | $133.18 |
| SR 25 Overpass (over railroad) (160345) | 06/07 | 13,523<br>AASHTO Type III | $136.36 |
| SR 70 Over Road (949901)<br>Bridge Widening | 06/07 | 3,848<br>AASHTO Type II | $210.92 |
| SR 710 Over water (930534) | 06/07 | 12,568<br>Inverted T-Beam 20” | $124.63 |
| SR 50 Over road (750560) | 07/08 | 30,250<br>Steel Box Girders | $186.94 |
| SR 50 Over road (750561) | 07/08 | 30,250<br>Steel Box Girders | $185.46 |
| SR 93 Over road (100695) | 06/07 | 9,072 FI-U Beam 54” | $156.22 |
| SR 93 Over road (100697) | 06/07 | 7,776 FI-U Beam 72” | $196.81 |
| SR 93 Over road (100699) | 06/07 | 7,776 FI-U Beam 72” | $202.47 |
| SR 93 Over road (100705) | 06/07 | 14,490<br>AASHTO Type IV | $96.13 |
| Buckhorn Creek Low Level Bridge (over water) (064122) | 06/07 | 4,181<br>Cast-in-Place Deck | $142.29 |
| CR 179A West Pittman Creek (524135) | 06/07 | 8,014<br>Slab (precast) | $108.71 |
| SR10 Perdido River (480218) | 2010 | 34,912<br>AASHTO Type III | $82.43 |
| SR 281 (580186) | 2010 | 8,256 FIB 54 | $176.70 |
| SR 91 Ramp Overpass (931013) | 2012 | 18,150 FIB 36 & 78 | $98.87 |
| SR 739 Medium Level over railroad & water (120173) | 2012 | 47,948 FIB 36 & 78 | $165.28 |
| SR 80 Low Level over water (070075 & 070076) | 2012 | 11,618 FIB 63 | $113.08 |
| Quincy In-Town-By Pass Medium Level over water (500142) | 2012 | 58,454 FIB 54 | $58.50 |
| SR 10 over White River Medium Level (580212) | 2012 | 58,179 FIB 36 | $72.50 |
| SR 10 over Bass Hole Cove Medium level (580213) | 2012 | 13,530 FIB 36 | $75.78 |

| Project Name and Description | Letting Date | Deck Area (SF) | Cost per SF |
|---|---|---|---|
| SR 415 Medium Level over water (790219) | 2012 | 125,025 FIB 36 & 63 | $77.07 |
| SR 686 Ramp Overpass (150291) | 2012 | 10,409 FIB 54 | $97.31 |
| SR 682 Pinellas Bayway High Level over water (150223) | 2011 | 252,370 FIB 78 & 84 | $91.73 |
| NW 25th St (874239) | 2011 | 130,385 Inverted Tee | $117.67 |
| NW 25th St (874240) | 2011 | 122,974 Steel Plate Girders | $178.74 |
| SR 417 E Overpass over road/railroad (770095) | 2010 | 7,200 Steel Plate Girders | $172.35 |
| SR 93 Overpass over (road/railroad) (120093 & 120094) | 2011 | 29,261 Steel Plate Girders | $76.78 |

### 9.3.2 Post - tensioned Concrete Box Girder, Segmental Bridges

| Project Name and Description | Letting Date | Deck Area (SF) | Cost per SF |
|---|---|---|---|
| A1A over ICWW (St. Lucie River)(Evans Crary) (890158) | 97/98 | 297,453 Span by Span | $80.50 |
| Palm Beach Airport Interchange at I-95 (930480) | 99/00 | 77,048 Balanced Cantilever | $100.73 |
| Palm Beach Airport Interchange at I-95 (930477) | 99/00 | 20,925 Balanced Cantilever | $96.31 |
| Palm Beach Airport Interchange at I-95 (930479) | 99/00 | 69,233 Balanced Cantilever | $88.49 |
| Palm Beach Airport Interchange at I-95 (930482) | 99/00 | 47,466 Balanced Cantilever | $104.96 |
| Palm Beach Airport Interchange at I-95 (930482) | 99/00 | 81,059 Balanced Cantilever | $101.44 |
| Palm Beach Airport Interchange at I-95 (930483) | 99/00 | 90,926 Balanced Cantilever | $101.57 |
| Palm Beach Airport Interchange at I-95 (930484) | 99/00 | 41,893 Balanced Cantilever | $115.11 |
| Palm Beach Airport Interchange at I-95 (930478) | 99/00 | 20,796 Balanced Cantilever | $95.16 |
| 17th Street over ICWW (Ft. Lauderdale) (860623) | 96/97 | 13,5962 Balanced Cantilever | $74.71 |
| SR 704 over ICWW Royal Palm Way (930507 & 930506) | 00/01 | 43,173 each C.I.P. on Travelers | $163.88 |

| Project Name and Description | Letting Date | Deck Area (SF) | Cost per SF |
|---|---|---|---|
| US 92 over ICWW (Broadway Bridge) Daytona (790188) | 97/98 | 145,588 Balanced Cantilever | $81.93 |
| US 92 over ICWW (Broadway Bridge) Daytona (790187) | 97/98 | 145,588 Balanced Cantilever | $81.93 |
| SR 789 over ICWW (Ringling Bridge) (170021) | 00/01 | 329,096 Balanced Cantilever | $81.43 |
| US 98 over ICWW (Hathaway Bridge) (460012) | 00/01 | 575,731 Balanced Cantilever | $87.72 |
| SR 9 Overpass (over Road/railroad) (720761) | 06/07 | 122,500 Segmental | $125.26 |

### 9.3.3 Post-tensioned Cast-in-place Concrete Box Girder Bridge (low level overpass)

| Project Name and Description | Letting Date | Deck Area (SF) | Cost per SF |
|---|---|---|---|
| SR 858 over ICWW Hallandale Beach (860619 & 860618) | 97/98 | 29,888 each | $83.25 |
| SR 858 Flyover Hallandale Beach (860620) | 97/98 | 21,777 | $81.99 |
| 4th Street over I-275 | 94/95 | 12,438 | $75.21 |

### 9.3.4 Bascule Bridge Cost

Deck area is calculated to be coping-to-coping width times overall bascule length including both bascule pier lengths and main span. Costs include all cost for movable span, gates and bascule piers.

| Closed Deck Bascule Bridges | | | |
|---|---|---|---|
| **Project Name and Description** | **Letting Date** | **Deck Area (SF)** | **Cost per SF** |
| SR 45 over ICWW Venice (170170 & 170169) | 99/00 | 8,785 each | $768 |
| Royal Palm Way SR 704 over ICWW (930507 & 930506) | 00/01 | 11,535 each | $1,089 |
| SR 858 over ICWW Hallandale Beach (860618 & 860619) | 97/98 | 14,454 each | $811 |
| Ocean Ave. over ICWW Boynton Beach (930105) | 98/99 | 11,888 | $1,157 |
| 17th Street over ICWW Ft. Lauderdale (860623) | 96/97 | 34,271 | $865 |

| Closed Deck Bascule Bridges | | | |
|---|---|---|---|
| **Project Name and Description** | **Letting Date** | **Deck Area (SF)** | **Cost per SF** |
| 2nd Avenue over Miami River (874264) | 99/00 | 29,543 | $1,080 |
| SR 699 John's Pass (150253) | 04/05 | 16,500 includes Bascule and approach span | $1,728 |
| SR 699 John's Pass (150254) | 04/05 | 16,500 includes Bascule and approach span | $1,697 |
| SR 933 12nd Ave over Miami River (870662) | 04/05 | 74,470 includes Bascule (30,910) and approach spans (43,560) | $595 (Bascule $1,287) (App. spans $105) |
| SR 7 (5 St/7 Ave) Over the Miami River (870990) | 04/05 | 21,546 | $1,950 |

### 9.3.5 Cast-In-Place Flat Slab

| Project Name and Description | Letting Date | Deck Area (SF) | Cost per SF |
|---|---|---|---|
| Parrot Creek Bridge (524209) | 2010 | 5,293 | $112.89 |
| SR 72 Low Level over water | 2010 | 26,595 | $114.82 |
| SR 87 Low Level over water (580181) | 2010 | 10,944 | $117.97 |
| SR 35 Low Level over water (160333 & 160334) | 2012 | 11.107 | $93.90 |
| SR 83 Low Level over water (600190) | 2012 | 12,494 | $126.13 |
| SR 415 Low Level over water (790220) | 2012 | 5,213 | $98.51 |

## 9.4 BRIDGE DEBRIS QUANTITY ESTIMATION (Rev. 01/17)

Requirements for making bridge debris available to other agencies are stated in the ***Project Management Handbook*** and ***PPM*** Volume 1, Sections 13.5.2.3 and 26.9.2.8. Use the following values for calculating the approximate volume of concrete debris that will be generated by demolishing a bridge. For bridge components not shown, use project specific dimensions and details to calculate the approximate volume of debris. Include the estimated volume of debris in the BDR.

| Component | CY/LF |
|---|---|
| 18" Inverted T Beam: | 0.066 |
| AASHTO Type II Beam: | 0.095 |
| AASHTO Type III Beam: | 0.144 |
| AASHTO Type IV Beam: | 0.203 |
| AASHTO Type V Beam: | 0.261 |
| AASHTO Type VI Beam: | 0.279 |
| 72" Florida Bulb T Beam: | 0.237 |
| 78" Florida Bulb T Beam: | 0.284 |
| 48" Florida-U Beam: | 0.311 |
| 54" Florida-U Beam: | 0.328 |
| 63" Florida-U Beam: | 0.355 |
| 72" Florida-U Beam: | 0.381 |
| 14" Square Pile: | 0.050 |
| 18" Square Pile: | 0.083 |
| 24" Square Pile: | 0.148 |
| 30" Square Pile (w/18" diameter void): | 0.166 |
| 32" New Jersey Shape Traffic Railing: | 0.075 |
| 32" F Shape Traffic Railing: | 0.103 |
| 32" F Shape Median Traffic Railing: | 0.120 |
| 36" Single-Slope Median Traffic Railing | 0.159 |
| 36" Single-Slope Traffic Railing | 0.107 |
| 42" Single-Slope Traffic Railing | 0.143 |
| Florida-I; 36 | 0.207 |
| Florida-I; 45 | 0.224 |
| Florida-I; 54 | 0.240 |
| Florida-I; 63 | 0.256 |
| Florida-I; 72 | 0.272 |
| Florida-I; 78 | 0.283 |
| Florida-I; 84 | 0.294 |
| Florida-I; 96 | 0.315 |

# 10 PEDESTRIAN BRIDGES

## 10.1 GENERAL

A. The criteria covers engineered steel and concrete pedestrian bridge superstructures, including proprietary trusses, and the associated substructures, ramps, stairs, etc. crossing over FDOT roadway or placed on FDOT right-of-way.

B. Minor timber or aluminum structures associated with boardwalks, docks or fishing pier projects are not covered by these policies except that the loading shall meet requirements defined herein.

C. Wooden trusses or timber beam structures shall not cross over FDOT roadway facilities.

D. Aluminum or Fiber-reinforced polymer (FRP) (i.e. plastic, carbon fiber, or fiberglass) pedestrian bridges are not allowed.

E. Comply with ADA requirements for ramps and railings. See ***SDG*** 1.1.6 (ADA on Bridges).

## 10.2 REFERENCED STANDARDS

Reference Standards are in accordance with Section 8.2 of the ***PPM*** (Volume 1).

## 10.3 DESIGNER QUALIFICATIONS

A. All design calculations and design details or any design changes must be signed and sealed by a Professional Engineer licensed in the State of Florida.

B. For FDOT projects, engineering design firms working directly for the FDOT or Contractor's EORs designing prefabricated steel truss pedestrian bridges meeting the requirements of ***PPM***, Volume 1, Article 8.7.2 shall be pre-qualified in accordance with Rule 14-75, work group 4.2.2.

C. Engineering firms designing private, permitted bridges crossing FDOT roadway facilities need not be pre-qualified in accordance with Rule 14-75, but must comply with Rule 14-75 for minimum personnel and technical experience.

## 10.4 DESIGN

A. All pedestrian bridge structures shall be designed in accordance with the following:

- AASHTO LRFD Bridge Design Specifications (AASHTO)
- AASHTO LRFD Guide Specifications for the Design of Pedestrian Bridges (Guide Spec.)
- FDOT Plans Preparation Manual (***PPM***)
- FDOT Structures Manual

B. Prefabricated Steel Truss Pedestrian Bridges meeting the requirements of ***PPM***, Volume 1, Section 8.7.2 shall be designed and detailed as follows:
   1. Fully design and detail foundation and substructure in the plans.
   2. Fully design and detail all approach structures including non-truss approach spans, ramps, steps/stairways, approach slabs, retaining walls, etc. in the plans.
   3. Include general plan and elevation indicating minimum aesthetic requirements for the prefabricated steel truss bridge in the plans (see ***PPM***, Volume 1, Appendix 8-1).
   4. Prefabricated steel truss superstructure is to be designed and detailed by the Contractor's EOR after award of the contract. Design calculations, technical specifications, and fully detailed shop drawing are to be submitted to the Engineer for review and approval prior to fabrication. Components to be included in the shop drawings include trusses, floor system, lateral bracing, deck, railing/fencing, deck joints, bearing assemblies, etc.

C. It is desirable to limit the maximum overall width of prefabricated steel truss bridges to 12 feet. This will eliminate the need for a spliced section.

D. Pedestrian bridges not meeting the requirements of ***PPM***, Volume 1, Section 8.7.2 shall be custom designed and fully detailed in the plans.

| **Modification for Non-Conventional Projects:** |
| --- |
| Delete ***SDG*** 10.4.B, ***SDG*** 10.4.C and ***SDG*** 10.4.D. |

E. Design all pedestrian bridges for a 75 year design life.

F. Clearance criteria for pedestrian bridges shall be as follows:
   1. Vertical clearance criteria shall be as per the current ***PPM***, Volume 1, Table 2.10.1.
   2. Pedestrian bridges that accommodate horse travel shall have a minimum of 12 feet vertical clearance above the bridge deck.
   3. Lateral offset shall be in accordance with ***PPM***, Volume 1, Chapter 4. Lateral offset shall take into account future widening of the roadway below.

G. Camber DL/LL Deflections - Contrary to Guide Spec. [5] use the following to determine maximum deflections for pedestrian bridges:
   1. Pedestrian Load . . . . . Span/500
   2. Truck Load . . . . . Span/500
   3. Cantilever arms due to service pedestrian live load . . . . . Cantilever Length/300
   4. Horizontal deflection due to lateral wind load . . . . . Span/500
   5. The pedestrian bridge shall be built to match the plan profile grade after all permanent dead load has been applied.

H. See ***SDG*** 3.5.1.F for minimum pile size requirements.

I. When determining the capacity of reinforced concrete decks, capacity due to stay-in-place forms shall be disregarded.

## 10.5 LOADING (Rev. 01/17)

This section supplements the ***LRFD Guide Specifications for the Design of Pedestrian Bridges***.

A. Design all pedestrian bridges for wind speeds specified in ***SDG*** Table 2.4.1-1.

B. Calculate design wind loads on truss type pedestrian bridges according to the ***LRFD Specifications for Structural Supports for Highway Signs, Luminaires, and Traffic Signals***. For all other types of pedestrian bridges calculate design wind loads according to ***SDG*** 2.4.1 and the ***LRFD Bridge Design Specifications***.

C. For Pedestrian Bridges over 75 feet high or with unusual structural features, submit wind load calculations to the FDOT Structures Design Office for approval.

## 10.6 MATERIALS

A. Require that all materials be in compliance with the applicable ***Specifications***.

B. Careful attention shall be given in selecting combinations of metal components that do not promote dissimilar metals corrosion.

C. Specify ASTM A500 Grade B or C or ASTM A847 for structural tubing: Minimum thickness shall be 1/4" for primary members and 3/16" for verticals and diagonals.

D. For steel I-girder and box girder superstructures, see ***SDG*** 5.3.1 for the structural steel material and coating requirements. For other superstructure types, contact the District Structures Design Engineer regarding whether to utilize unpainted weathering steel, galvanizing or a paint system. If a paint system is required, determine whether an Inorganic Zinc Coating System or a High Performance Coating System is preferred.

| **Modification for Non-Conventional Projects:** |
| --- |
| Delete ***SDG*** 10.6.D and see the RFP for requirements. |

E. In the design of Steel HSS (Hollow Structural Section), use a design wall thickness of 0.93 times the nominal wall thickness to ensure safety.

F. Aluminum is allowed only for railing and fence enclosure elements. Isolate aluminum from concrete components at the material interface.

G. Design and detail cast-in-place concrete decks. See ***SDG*** Table 1.4.2-1 for concrete cover requirements.

H. Comply with ***SDG*** 1.3 Environmental Classification.

## 10.7 STEEL CONNECTIONS

A. Field welding is not allowed except as provided in ***SDG*** 5.11.

B. Welding - Meet the requirements of ***Specifications*** Section 460.

C. Bolting Criteria:

1. Design bolted connections per ***SDG*** Chapter 5 with the following exception.
2. Bearing type connections are permitted only for bracing members.

D. Tubular Steel Connections:

1. Open-ended tubing is not acceptable.
2. Prior to bolting of field sections tubular members shall be capped and fully sealed with the following exception. Weep holes shall be provided at the low point of all members to allow for drainage of water accumulated inside the members during transport and erection. After erection is complete and prior to painting, the weep holes shall be sealed with silicone plugs.
3. Require that all field splices be shop fit.
4. Specify or show field sections bolted together using splice plates.
5. When through bolting is necessary, stiffen the tubular section to ensure the shape of the tubular section is retained after final bolting.

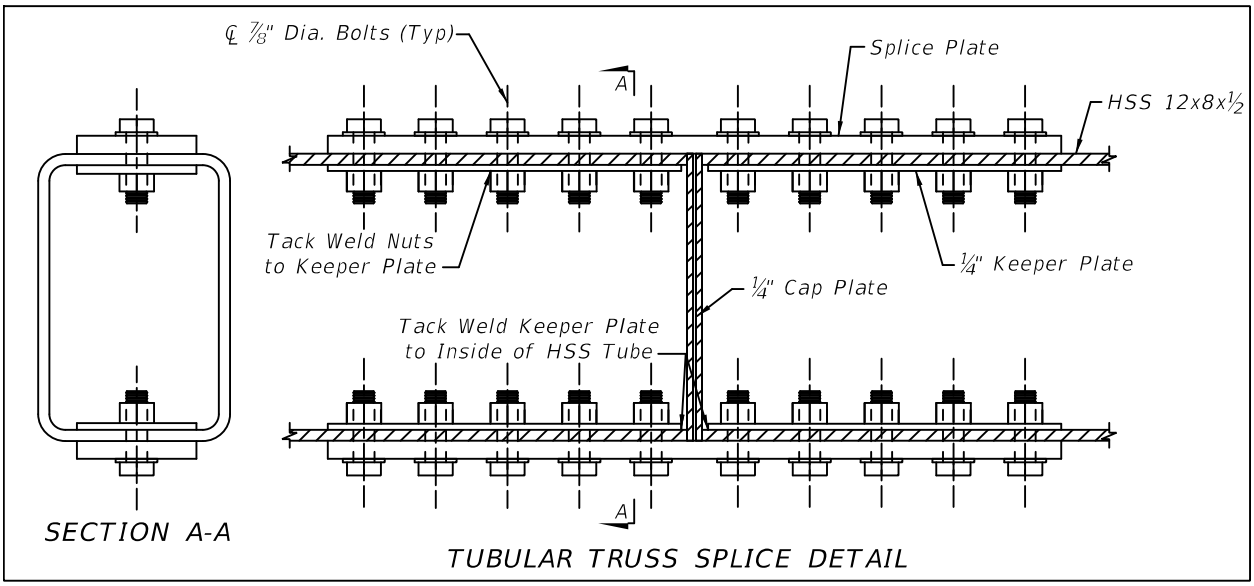


E. Vibrations: Limits on vibration shall be as specified in ***LRFD*** Guide Specifications for the Design of Pedestrian Bridges. Vibration frequency shall be checked under temporary construction conditions.

## 10.8 CHARPY V-NOTCH TESTING

A. Require ASTM A709 Charpy V-Notch testing for all structural steel tension members.

B. Require Impact testing requirements as noted below:

1. Test non-fracture critical tension members in accordance with ASTM A709 (latest version).

2. Primary tension chords in a two truss bridge may be considered non-fracture critical due to frame action.
3. Test fracture critical tension members in accordance with ASTM A709 (latest version).
4. Test tubular tension members (ASTM A500) in accordance with Section 962 of the ***Specifications***.
5. Cross frames, transverse stiffeners, and bearing stiffeners not having bolted attachments and expansion joints do not need to be tested.

## 10.9 CABLE-STAYED PEDESTRIAN BRIDGES

A. Design stay systems to meet the same durability and protection requirements as FDOT post-tensioning systems for anchors, tendons or P.T. bars. See ***SDG*** 4.5.

B. Design cable-stay structures for stay removal and replacement such that any one stay can be removed.

## 10.10 PAINTING/GALVANIZING

A. Specify Paint systems in accordance with the ***Specifications***, Section 560 and 975. See ***SDG*** 5.12.

B. Coatings are not required for the interior of tubular components.

C. Consider the suitability of the fabricated component for galvanizing. Hot-dip galvanizing may be used where entire steel components can be galvanized after fabrication and where project specific aesthetic requirements allow.

D. Specify galvanizing in accordance with the ***Specifications***, Section 962.

E. Galvanizers must be on the ***State Materials Office Approved Materials/Producers*** list.

F. Welding components together after galvanizing is not acceptable.

## 10.11 ERECTION

A. Design and detail pedestrian bridge plans to minimize the disruption of traffic during bridge erection.

B. Include a note on the plans that the Contractor's Specialty Engineer is responsible for designing a falsework system capable of supporting portions of the superstructure during erection.

| **Modification for Non-Conventional Projects:** |
| --- |
| Delete ***SDG*** 10.11.B. |

C. The erection of pedestrian structures will be inspected per ***Specifications*** 460 or 450.

## 10.12 RAILINGS/ENCLOSURES

A. Design pedestrian railings in accordance with***SDG*** 6.8.

B. Provide ADA compliant handrails as required. Occasional use of the bridge by maintenance or emergency vehicles generally does not warrant the use of a crash tested combination pedestrian / traffic railing.

C. Provide railings options as directed by the District as follows:
   1. 42" Pedestrian/Bicycle railing (minimum)
   2. 48" Special Height Bicycle railing
   3. Open top fence / railing combination
   4. Full enclosure fence / railing combination
   5. Open top cladding / railing combination (glass, steel panel, concrete panel, etc.)
   6. Full enclosure cladding / railing combination

D. Utilize FDOT standard fence designs or connection details from ***Design Standards*** Index 810, 811, and 812 where applicable.

## 10.13 DRAINAGE

A. Design and detail drainage systems as required. See ***SDM*** Chapter 22.

B. Provide curbs, drains, pipes, or other means to drain the superstructure pedestrian deck. Drainage of the superstructure onto the roadway underneath is not allowed.

C. Conform to ADA requirements for drainage components.

## 10.14 CORROSION RESISTANT DETAILS

A. Provide designs such that water and debris will quickly dissipate from all surfaces of the structure.

B. See ***SDG*** 5.12 Corrosion Protection.

## 10.15 LIGHTING / ATTACHMENTS

A. Design lighting levels per the latest edition of the ***Illuminating Engineering Society of North America Lighting Handbook (IES)***. Use the requirements for pedestrian walkways.

B. For tubular structures, design any attachment, including electrical wiring, signs, signals, etc., strapped to the bridge. The tapping of holes into the structural tubular members is not allowed.

C. For wind loads, design lighting attachments as per ***LRFD*** and the ***Standard Specifications for Structural Supports for Highway Signs, Luminaires, and Traffic Signals***.

## 10.16 MAINTENANCE AND INSPECTION ATTACHMENTS

A. Inspections will be performed in accordance with the Department's current procedure and criteria and the FDOT maintenance guidelines.

B. The inspection and maintenance criteria of private permitted bridges for the spans that cross FDOT roadway facilities are the same as for public bridges.

## 10.17 PERMIT STRUCTURES

A. Only spans crossing FDOT roadway facilities and the supporting piers and foundations will be reviewed by FDOT.

B. Design, fabrication, and erection of non-FDOT structures placed over FDOT roadways or on FDOT right-of-ways will comply with the requirements of this chapter and Chapter 8 of the ***PPM***, Volume 1.

# 11 TEMPORARY WORKS

## 11.1 GENERAL

This chapter is intended for use by Specialty Engineers, Contractor's Engineers of Record and Prequalified Specialty Engineers. For the design of all temporary works affecting public safety, provisions 11.2, 11.3 and 11.4 apply.

## 11.2 WELDS

For any and all welds which in the event of their failure might pose a hazard to the public, insert a plan note in the shop drawings stating that such welds must be performed by welders qualified under AWS D1.5 for the type of weld being performed.

## 11.3 ADHESIVE BONDED ANCHORS

A. Adhesive Bonded Anchor Systems are not permitted for tension tie-downs for any structural element under any circumstances.

B. For all other adhesive bonded anchor applications, use the design procedures given in ***SDG*** 1.6. Do not use Adhesive Bonded Anchor Systems for installations with a combination of predominately sustained tension loads and/or lack of structural redundancy where durations of temporary work shall be considered as sustained loading.

C. Except where prohibited above, where Adhesive Bonded Anchors are loaded in tension or a combination of tension and shear which in the event of their failure might pose a hazard to the public, insert the following plan/shop drawing note:

   “For Adhesive Bonded Anchors loaded in tension, test anchors to at least 150% of the required factored tension load. For Adhesive Bonded Anchors loaded in a combination of tension and shear, test anchors to 150% of the factored resultant combined tension and shear loads. Apply the test load along the axis of the anchor as a tension load.”

## 11.4 FALSEWORK FOUNDED ON SHALLOW FOUNDATIONS

When vertical displacement limits are provided in the plans, and when shallow foundations such as spread footings and/or mats are being proposed, submit shop drawings and applicable calculations of the falsework system including the subsurface conditions and settlement estimate. Design the falsework system for the worst case differential settlements.

## 11.5 BRIDGE DECK OVERHANG FALSEWORK FOR STEEL I-GIRDERS

When required by Section 400 of the ***Specifications***, provide shop drawings and calculations for steel I-girders with bridge deck overhang falsework supporting screed rails. Limit screed rail deflections to achieve the deck profile, thickness and concrete cover as required by the Contract Documents. Evaluate deformations such as local web deformations, top and bottom flange lateral deformations, and out-of-plane rotation of steel I-girders. Perform the evaluation using a finite element analysis. Show all falsework components and any temporary bracing in the shop drawings.

## 11.6 PRESTRESSED I-BEAM TEMPORARY BRACING DESIGN

### 11.6.1 General

As required by Section 5 of the ***Specifications***, provide shop drawings and calculations for the temporary bracing design. Design temporary beam bracing in accordance with the FDOT ***Structures Manual***, the ***Specifications*** and the information contained in the Contract Documents.

### 11.6.2 Beam Stability

For stage definitions and I-beam stability requirements, see ***SDG*** 4.3.4.

### 11.6.3 Temporary Bracing Member Design (Rev. 01/17)

A. Anchor bracing, if required for the first beam placed, may be designed on a skew parallel with the centerline of bearing. Design all other bracing as moment resisting frames perpendicular to the beams (intermediate horizontal strut bracing alone provides no measurable gain in system capacity, see Reference 1). Place end bracing no greater than 4'-0" from the centerline of bearings (applies to one end of bracing for skewed bridges). For Stage 2 Bracing, use the same bracing in all bays. See the 'TABLE OF PRESTRESSED I-BEAM TEMPORARY BRACING MINIMUM REQUIREMENTS AND LOADS' in the Structures Plans for the minimum number of braces required to ensure beam stability.

B. Design bracing systems (members and connections) for the applied forces given in the 'TABLE OF PRESTRESSED I-BEAM TEMPORARY BRACING MINIMUM REQUIREMENTS AND LOADS'. For braced beams under wind loading (Stage 2), use the ***LRFD*** Strength III horizontal load to determine the brace forces. Assume the Stage 2 horizontal loads are applied perpendicular to the beam web at mid-height. For braced beams during deck casting (Stage 3), use the ***LRFD*** Strength I overturning moment to determine the brace forces. Assume the Stage 3 overturning moments are applied at the centerline of the beam at the top of the top flange. For simplicity, a 2D model with boundary conditions as shown in Figure 11.6-1 may be used to determine brace forces (see Reference 1). Apply Stage 2 and Stage 3 loads as separate load cases.

## Figure 11.6-1 Recommended Structural Analysis Models for Determining X-brace and K-brace Forces

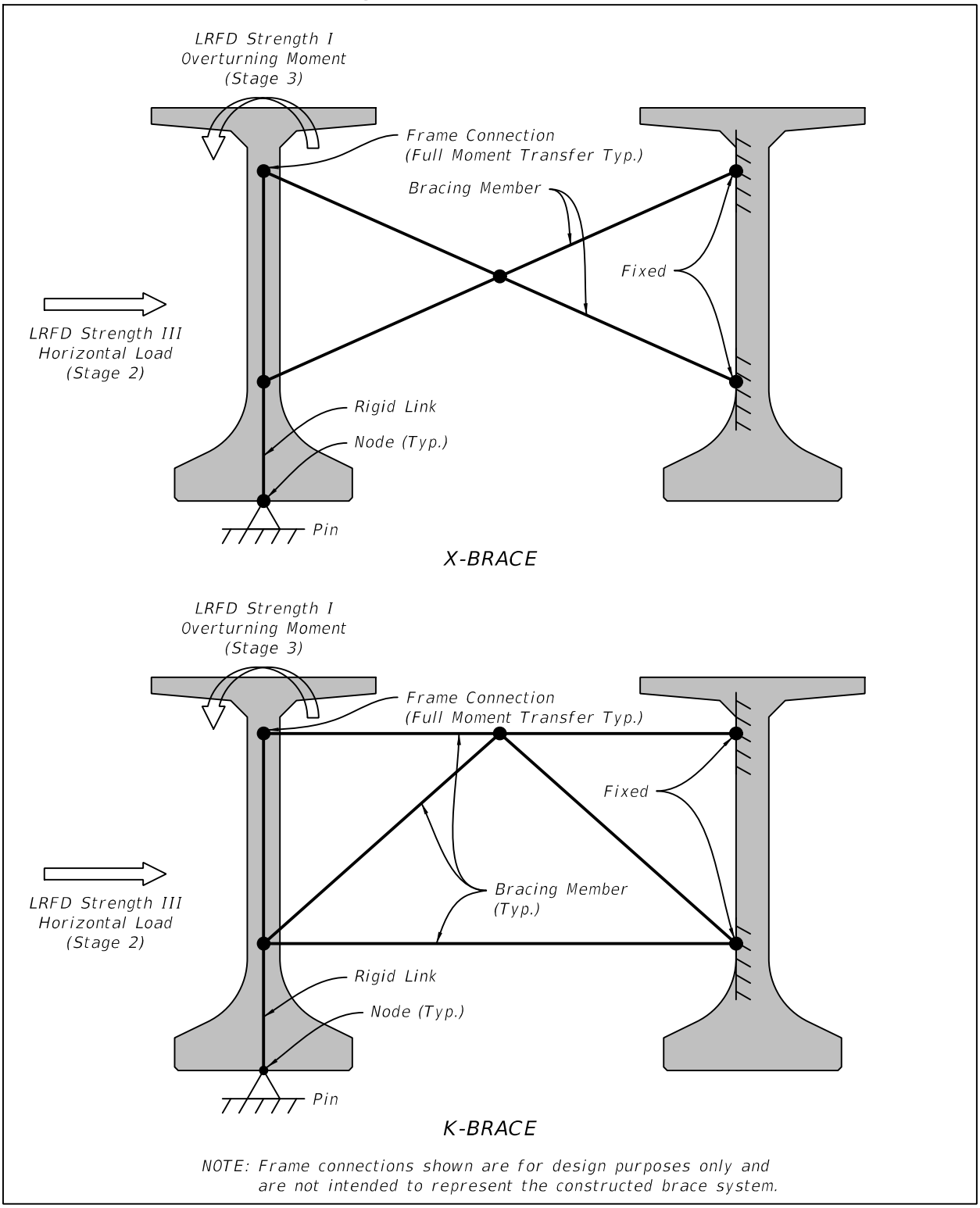

C. In addition to designing individual brace members based on the member forces, check the final brace system capacity C ≥ 1.0 of FIB beams using the following equations (not required for AASHTO Type II beams):

$$C = C_0 + \frac{\omega \cdot 620 \cdot (k_{brace}) \cdot e^{\frac{(-L)}{30}}}{k_{brace} + 1000000} - \frac{\sqrt{P_{avg}}}{1000000} \cdot [8 \cdot (L)^2 + 0.004 \cdot (L) \cdot k_{brace} - 5100 \cdot (L) - k_{brace} + 900000] - \frac{D \cdot P_U}{48 \cdot w_{beam}} \geq 1.0$$

$$C_0 = 47 e^{\frac{-L}{42}} + 0.5$$

Where:

| | | |
|---|---|---|
| $C_0$ | = | the capacity of an unanchored two beam FIB system in zero wind conditions (in terms of g), with sweep due to fabrication tolerances and thermal effects. |
| C | = | the capacity of a two beam FIB system considering the effects from bracing, wind, and aerodynamic lift (in terms of g). |
| L | = | span length (ft) |
| $\omega$ | = | empirical scale factor to account for capacity increase from bracing at interior points. For end bracing only $\omega$ = 1, for the combination of end bracing and mid-span bracing $\omega$ = 1.4, for the combination of end bracing and quarter point bracing $\omega$ = 1.7. |
| $k_{brace}$ | = | effective brace stiffness (kip-ft/rad). Determine $k_{brace}$ by using the recommended structural model in Figure 11.6-2 |
| D | = | FIB cross-section depth (in) |
| $P_U$ | = | 1.5 times the unshielded wind load (psf) |
| $P_{avg}$ | = | 1.5 times the average wind load pressure per beam for a 2 beam system considering skew (psf). For a zero skew bridge $P_{avg} = P_U /2$ since the second girder is shielded for its entire length. |
| $w_{beam}$ | = | beam self-weight (lbf/ft) |

For simplicity, a 2D model with a unit torque and boundary conditions as shown in Figure 11.6-2 may be used to determine brace system stiffness (see Reference 1).

**Figure 11.6-2 Recommended Structural Analysis Model for Determining K-brace System Stiffness (X-brace similar)**

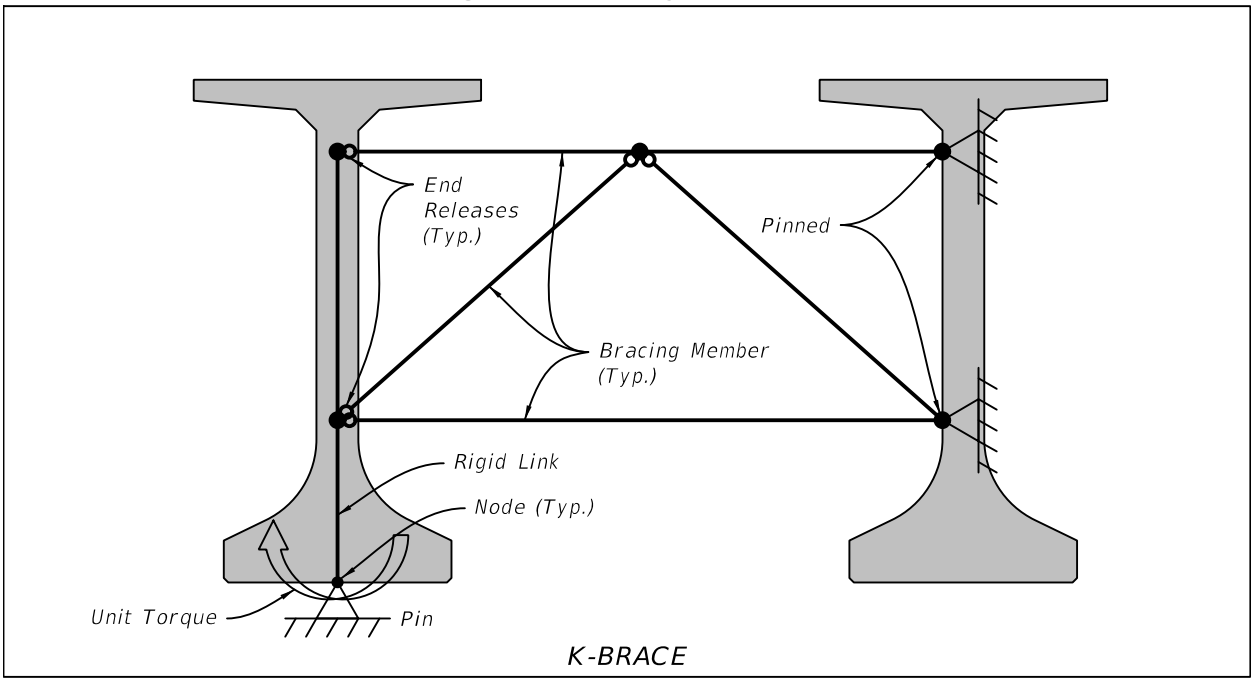


D. Additional analysis methods for bracing design can be found in References 1 and 2. For braced beams during Stage 3, a data base method generated from 3D finite element models to calculate K-brace or X-brace forces directly is available (see Reference 2).

## 11.6.4 References

[1] Consolazio, G., Gurley, K., and Harper, Z. (2013). Bridge Girder Drag Coefficients and Wind-Related Bracing Recommendations, Structures Research Report No. 2013/87322, University of Florida, Gainesville, FL.

[2] Consolazio, G., and Edwards, T. (2014). Determination of Brace Forces Caused by Construction Loads and Wind Loads During Bridge Construction, Structures Research Report No. 2014/101350, University of Florida, Gainesville, FL.

## 11.7 TEMPORARY ACCESS AND LIFTING HOLES IN TOP SLABS OF SEGMENTAL BOX GIRDERS (Rev. 01/17)

### 11.7.1 Temporary Access Holes

Temporary access holes in the top slab of segmental box girders to facilitate access for erection, jacking and tendon filling operations are permitted using the following criteria.

A. The maximum number and associated temporary access hole sizes are:
   1. One 30" x 42" (maximum) temporary access hole per span, or
   2. Two 12" x 12" (maximum) temporary access holes per span.

   Access hole dimensions are measured at the top of the top slab.

B. Locate top slab temporary access holes within the positive moment sections of the completed structure.

C. Locate the top edges of top slab temporary access holes:
   1. A minimum of 1'-0" from adjacent ducts or anchorages for longitudinal tendons in the top slab
   2. A minimum of 3" from adjacent ducts and a minimum of 1'-0" from adjacent anchorages for transverse tendons in the top slab
   3. A minimum of 1'-0" measured horizontally from anchorages in the bottom slab accounting for longitudinal grade and cross slope

D. Detail the sides of temporary access holes to be sloped at 1H:6V.

E. Utilize threaded reinforcing bar couplers/inserts for bars that must be cut and made discontinuous at the temporary access holes. Do not show cut reinforcing bars to extend into temporary access holes and be bent out of the way temporarily to facilitate access.

F. Provide supplemental reinforcing bars placed parallel to each side and diagonally at each corner of temporary access holes.

G. Specify temporary access holes to be filled in accordance with ***Specifications*** Section 462.

### 11.7.2 Lifting Holes

Round lifting holes in the top slab of segmental box girder segments are permitted using the following criteria.

A. Utilize through holes in lieu of embedded anchor assemblies.

B. Design and detail lifting holes to have a constant maximum diameter of 2" or to have sloping sides with a 2" maximum diameter.

C. Locate lifting holes a minimum of 1" from adjacent ducts and a minimum of 1'-0" from adjacent anchorages.

D. Specify the use of removable forming devices and materials, and that they are to be removed prior to filling lifting holes.

E. Specify lifting holes to be filled in accordance with ***Specifications*** Section 462.

# VOLUME 1 - REVISION HISTORY

**I.3** ..... Added and Revised Wind Load cross references in Table I.3-1 to coordinate with changes to SDG Chapter 2.

**1.1.3** ..... Added new Paragraph A.4 and new Figure 1.1.3-1.

**1.2** ..... Clarified requirements of Paragraph C.

**1.4.1** ..... Added ASTM A276 to deformed stainless steel bar and clarified requirements for use of ASTM A1035 steel in Paragraph B; Clarified requirements in MNCP Box in Paragraph D.

**1.4.2** ..... Revised cover requirements for traffic railings in Table 1.4.2-1 per SDB 16-06.

**1.6.2** ..... Revised Paragraph D.2 Commentary #6 per SDB 16-06 with subsequent modifications.

**1.6.3** ..... Revised ACI reference in Paragraph B.5.

**1.9** ..... Clarified that clicking the text link or new image link will open the referenced Appendix 1A; Revised Figure 1.9-1 to show single-slope traffic railings.

**1.11.1** ..... Revised Paragraph B and added Table 1.11.1-1 per SDB 16-07 with subsequent modifications; Added Figure 1.11.1-1 and Table 1.11.1-2; Revised Paragraphs C and D and associated MNCP box; Revised Paragraph F.

**1.11.2** ..... Revised Paragraphs A.1, B and H.

**1.11.3** ..... Combined and revised design values for wobble coefficient and coefficient of friction in Paragraph D; Deleted Paragraph E.

**1.11.4** ..... Revised Section per SDB 16-07 with subsequent modifications.

**1.11.5** ..... Revised Paragraphs A, B and C per SDB 16-07.

**1.11.7** ..... Revised Paragraphs C and E.

**2.2** ..... Added Single-Slope Traffic Railing values to Table 2.2-1 per SDB 16-06.

**2.4** ..... Revised Section.

**2.6.2** ..... Added Paragraph D.

**2.8.2** ..... Added cross reference to LRFD 4.6.3.

**3.1** ..... Clarified stirrup clearance requirements in Paragraph F.2; Clarified requirements of Table 3.1-1; Deleted corrosion rates for anchored sheet pile walls note in Design Life section of Table 3.1-1 Commentary.

**3.5.1** ..... Clarified applicability of Footnote 3 in Table 3.5.1-1.

**3.5.6** ..... Corrected LRFD cross reference; Revised Testing Requirements in Table 3.5.6-1.

**3.5.14** ..... Added cross references to Design Standards Index 22600 in Paragraphs A and B.

**3.6.1** ..... Clarified requirements for miscellaneous structures.

**3.10** ..... Revised Paragraph A.

**3.11.1** ..... Revised Paragraph H and Table 3.11.1-2 and added Figures 3.11.1-1 and 3.11.1-2 per SDB 16-07.

**3.11.4** ..... Added Paragraph C per SDB 16-05.

**3.12** ..... Revised Figure 3.12-1 to show single-slope traffic railings.

**3.12.1** ..... Clarified the requirements of Paragraph H.

**3.12.6** ..... Clarified the requirements of first Paragraph; Deleted second Paragraph.

**3.13.2** ..... Revised Paragraph C requirements for leveling pads to allow compacted aggregate leveling pad for permanent walls with block facing; Updated PPM cross reference in Figure 3.13.2-2.

**3.14.2** ..... Clarified Paragraph C.

**3.14.3** ..... Clarified the fender system height requirement in Paragraph B.

**3.15.6** ..... Clarified minimum thickness requirement considerations in Paragraph A.

**3.16.4** ..... Revised Section.

**3.18.4** ..... Revised Section.

**4.1.4** ..... Added Paragraphs B, C and Figure 4.1.4-1 per SDB 16-05.

**4.1.8** ..... Numbered first Paragraph as Paragraph A and added new Paragraph B and Commentary.

**4.2.5** ..... Added values for Single-Slope Traffic Railings to Table 4.2.5-1 and 4.2.5-2 per SDB 16-06; Revised Minimum As3 value for 32" Vertical Face Traffic Railing in Table 4.2.5-1.

**4.2.10** ..... Clarified requirements of Paragraph D.

**4.2.12** ..... Revised Figure 4.2.12-1 to show single-slope traffic railings.

**4.3.1** ..... Revised Paragraph E per SDB 16-01.

**4.3.4** ..... Revised wind speeds, beam length requirement, and Eq. 4-1.

**4.4.1** ..... Added new Paragraphs C and D per SDB 16-07.

**4.4.3** ..... Revised Paragraph A and associated MNCP box per SDB 16-01.

**4.5.1** ..... Revised Table 4.5.1-1.

**4.5.2** ..... Revised Table 4.5.2-1 per SDB 16-07.

**4.5.3** ..... Revised first Paragraph and Table 4.5.3-1 and added Figures 4.5.3-1, 4.5.3-2 and 4.5.3-3 per SDB 16-07.

**4.6.2** ..... Revised Paragraphs C.1.c, C.2.a, C.2.b and D.2.

**4.6.3** ..... Revised Paragraph A; Added new Figure 4.6.3-2 and renumbered subsequent Figure.

**4.6.4** ..... Added new Paragraph F per SDB 16-07; Revised Figure 4.6.4-2.

**4.6.7** ..... Revised Figure 4.6.7-1.

**4.7** ..... Added new Paragraph D per SDB 16-07.

**4.8** ..... Added new Paragraph B per SDB 16-07.

**5.1** ..... Revised Paragraphs A and B.

**5.3.2** ..... Added new Paragraph A.4; Clarified requirements of Paragraph C.

**5.4** ..... Revised ASTM reference in Paragraphs A and B.

**5.12.2** ..... Revised reference "ASTM A325" to "ASTM F3125 Grade A325" bolts.

**6.4.1** ..... Corrected reference to Specifications in Paragraph C.

**6.5** ..... Revised Paragraph D per SDB 16-01.

**6.5.1** ..... Removed reference to deleted Index 20500 in Paragraph C; Revised Paragraph D.4.

**6.7.1** ..... Revised Paragraphs A.1, A.2 and A.3 to require MASH testing for projects let after 7/1/18; Revised Paragraph B per SDB 16-06; Added new Paragraph F.

**6.7.3** ..... Replaced Section and provided link to FHWA website for policy requirements.

**6.7.4** ..... Revised Paragraph B.

**6.7.9** ..... Corrected LRFD cross reference in Paragraph A; Revised Figure 6.7.9-1 to show single-slope traffic railing.

**6.8.2** ..... Revised hight limit for opening requirements in Paragraph C.

**7.1.6** ..... Added new Section.

**7.3.7** ..... Added new Paragraph H, MNCP box and Commentary per SDB 16-07.

**7.4.4** ..... Revised Figures 7.4.4-1, 7.4.4-2 and 7.4.4-3 to show single-slope traffic railings.

**7.7** ..... Deleted Paragraph D and renumbered subsequent paragraphs; Deleted Item 3 from (renumbered) Paragraph E.

**8.6.12** ..... Revised reference "ASTM A325" to "ASTM F3125 Grade A325" bolts in Paragraph E.

**9.2.1** ..... Revised some unit prices; Added value for sheet piles with FRP in Paragraph G.2; Added values for Single-Slope Traffic Railings to Paragraph G.4 per SDB 16-06; Added new Paragraph I.

**9.2.2** ..... Revised tables in Paragraphs B.2 and C.1 per SDB 16-01; Revised Table in Paragraph E.1 per SDB 16-06; Clarified measurement of Detour Bridge in Paragraph F.

**9.4** ..... Added values for Single-Slope Traffic Railings per SDB 16-06.

**10.5** ..... Revised Section.

**11.6.3** ..... Revised equation and definition of $C_0$ in Paragraph C.

**11.7** ..... Added new Section per SDB 16-07.