Session 25

Steve Nolan

Florida Department of Transportation

LRFD Box Culverts

Topic Description

Update on the status of LRFD Box culvert design policy, criteria and standards. Presentation of revised specifications and new design standards for precast box culverts and proposed revisions to 2007 PPM and SDG. Discuss effect of recent changes to AASHTO LRFD design code and comparison to LFD designs.

Speaker Biography

Received a Bachelors of Engineering degree from University of NSW, Sydney, Australia 1989. Worked for a major heavy civil contractor after graduation on highway and mining infrastructures projects. Immigrated to USA and began with FDOT in 1996. Completed PE Training Program and began with the State Structures Design Office in 2000. Design experience in several Category 2 prestressed concrete and steel girder bridge projects and responsible for many of the Structures Standard Indexes. Florida registered PE since 2003.

FICE/FDOT Design Conference 2006
Designing For More Than Bridges & Roads

LRFD BOX CULVERTS

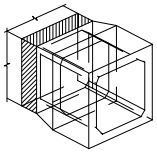

Presented by:
Steve Nolan
(State Structures
Design Office)

FICE/FDOT Design Conference 2006
Designing For More Than Bridges & Roads

INTRODUCTION

- LRFD Policy for Box Culverts
- Revised Construction Specifications
- New Design Standards
- Future Design Standards
- Changes to AASHTO- LRFD Design Specifications
- Future PPM & SDG Revisions
- Updates to Software

FICE/FDOT Design Conference 2006
Designing For More Than Bridges & Roads

FDOT LRFD Design Policy

Structures Temporary Design Bulletin C02-16 (09/30/2002):

- All new bridge-size culverts (spans ≥ 20 ft.) should be design using AASHTO LRFD Bridge Design Specification by July 1, 2006.
- Miscellaneous structures (box culvert < 20 ft. spans) and widenings/extensions may be design using the AASHTO Standard Specification (LFD) with HS25 loading, at the discretion of the District Structures Engineer.

FICE/FDOT Design Conference 2006
Designing For More Than Bridges & Roads

FHWA LRFD Policy

Bridge Technolology Memorandum (06/28/2000)
http://www.fhwa.dot.gov/bridge/062800.htm

- New bridges shall be designed LRFD after October 1, 2007
- New culverts shall be designed LRFD after October 1, 2010

FICE/FDOT Design Conference 2006
Designing For More Than Bridges & Roads

C-I-P vs Precast Box Culverts

- Department's policy is to show cast-in-place box culverts in the Contract Plans and allow the Contractor to substitute precast box culverts in accordance with Specification Section 410 (unless otherwise noted in the plans)
- Designers should not show precast only designs in the plans unless approved by the District Structures Engineer. Full design details and quantities must still be provided by the EOR.

FICE/FDOT Design Conference 2006
Designing For More Than Bridges & Roads

Specification Revisions

- Revised Section 410 – Precast Concrete Box Culverts (January 2007 Workbook)

  - Clarifies Section 346 concrete requirements;
  - Deletes references to LFD - AASHTO M 259 and M 273 specifications;
  - Clarifies design submittal requirements (3 options):
    1. Same as C-I-P design;
    2. Standard Precast Design (Index No. 292);
    3. Special Design by Contractor's Engineer of Record;
  - Expanded fabrication, repair, installation and joint material requirements.

FICE/FDOT Design Conference 2006
Designing For More Than Bridges & Roads

Specification Revisions

- New Section 407 – Three-sided Precast Concrete Culverts (January 2007 Workbook)

  - Similar updates to 410;
  - Not permitted as an equivalent substitution for four-sided box culverts, (must be shown in Contract Plans or an approved VECP).

FICE/FDOT Design Conference 2006
Designing For More Than Bridges & Roads

New Design Standards

- Interim Index No. 291 – Supplemental Details for Precast Concrete Box Culverts (released July 2006)

  – Precast tongue in groove joint requirements;
  – Connection details to C-I-P headwall, wingwalls & footings, and extensions;
  – Blockout details for inlet pipes;
  – Bond beams details for sites where differential settlement is a concern.

FICE/FDOT Design Conference 2006
Designing For More Than Bridges & Roads

Interim Index No. 291

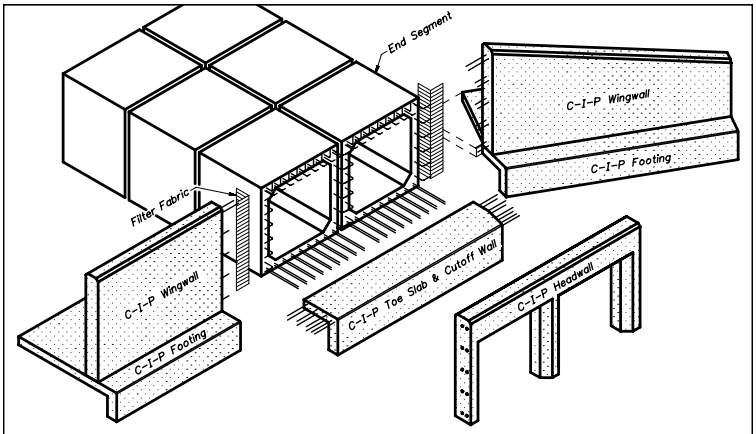

EXPLODED VIEW OF CONNECTIONS AT END OF CULVERT
(Double Barrel Culvert shown, Single or Multi-Barrel Culvert similar)

FICE/FDOT Design Conference 2006
Designing For More Than Bridges & Roads

Interim Index No. 291

Bond Beams for Differential Settlement:

- When foundation settlement is expected to be significant, joint opening between precast segments is a concern.

- Index No. 291 establishes a threshold limit, for joint opening due to settlement, of 1/8” before C-I-P bond beams are required to maintain box culvert aligment and joint integrity between units.

- Designer should note long term differential settlement in the plans to allow evaluation of a possible precast box culvert selection by the Contractor (see “Instructions To Designer”).

FICE/FDOT Design Conference 2006
Designing For More Than Bridges & Roads

Interim Index No. 291

(Differential Settlement Effects)

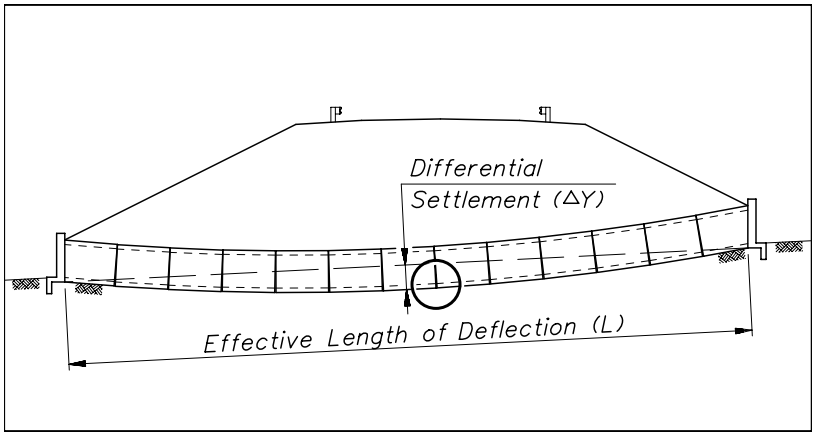

FICE/FDOT Design Conference 2006
Designing For More Than Bridges & Roads

Interim Index No. 291

(Differential Settlement Precast Joint Opening)

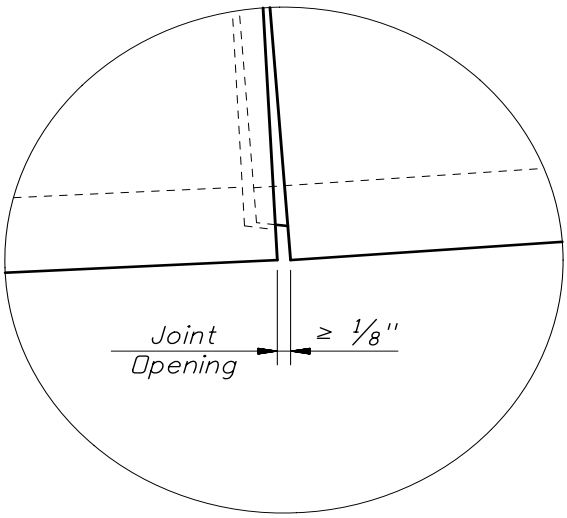

FICE/FDOT Design Conference 2006
Designing For More Than Bridges & Roads

Interim Index No. 291

Bond Beams for Differential Settlement

The amount of joint opening is a function of:

- Box height (R) (ft.)
- Box segment length (W) (ft.)
- Effective length of culvert run (L) (ft.)
- Height of differential settlement (ΔY) (ft.)

$$\frac{\Delta Y \times R \times W}{L^2} \leq 1 / 760$$

- For example: 200 ft. run of 8'x8' box culvert with 8' length segments, would require a differential settlement exceeding 8 ½" before bond beams are required.

FICE/FDOT Design Conference 2006
Designing For More Than Bridges & Roads

Interim Index No. 291

(Differential Settlement Countermeasures)

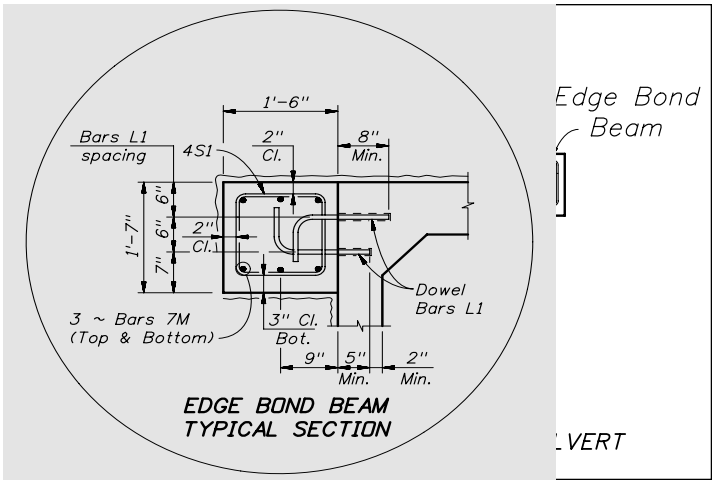

FICE/FDOT Design Conference 2006
Designing For More Than Bridges & Roads

Interim Index No. 291

(Differential Settlement Countermeasures)

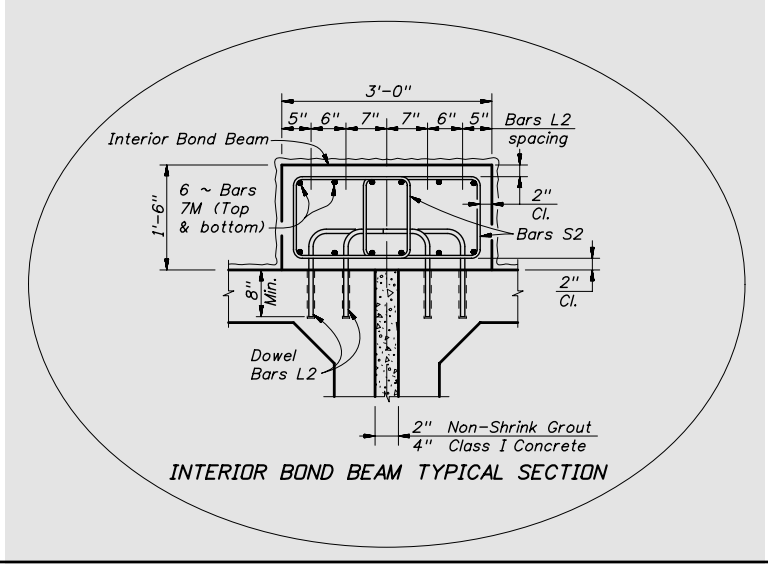

FICE/FDOT Design Conference 2006
Designing For More Than Bridges & Roads

Future Design Standards

(January 2007)

- Index No. 289 (LRFD Concrete Box Culverts):
  - This will replace Index No. 290 (Concrete Box Culverts)
- Index No. 292 (Standard Precast Concrete Box Culverts)
  - Match AASHTO M259, M273 and ASTM C1433/C1577 box sizes and depths:
    - Single cell monolithic box culverts
    - 3' to 12' spans, 3' to 12' rise
    - 0' to 30' depths of fill
  - 2" and 3" cover
  - 900+ different designs

FICE/FDOT Design Conference 2006
Designing For More Than Bridges & Roads

Precast Box Culverts

LFD Standard Design Tables

- ASTM C 789 = AASHTO M 259
- ASTM C 850 = AASHTO M273 (< 2 ft. Cover)

↓

- ASTM C1433 (replaced C 789 & C 850 in 1999)

LRFD Standard Design Tables

- ASTM 1577 (released July 2005)

None of these national standards meet FDOT design criteria for concrete cover or concrete specifications (Section 346)

FDOT Standard Design Tables will be issued under Design Index No. 292 (January 2007)

FICE/FDOT Design Conference 2006
Designing For More Than Bridges & Roads

AASHTO - LRFD Changes

- New service limit provisions (crack control) – *2005 Interim Article 5.7.3.4;*
- New equivalent strip widths for box culverts – *2005 Interim Article 4.6.2.10;*
- New fatigue stress limits for Welded Wire Reinforcement (WWR) – *future 2007 Interim Article 5.5.3.2.*

FICE/FDOT Design Conference 2006
Designing For More Than Bridges & Roads

New Crack Control Equations

LRFD 5.7.3.4 (2003)
(Gurgely-Lutz)

Bar Spacing:

$$s = (Z/f_s)^3 / (2d_c^2)$$

where:
- cover $\leq$ 2”
- $f_s \leq 0.6$ fy
- Z = 100, 130, 170 or 155/β (CIP B.C.)
- $\beta = 1 + d_c/(0.7d)$

LRFD 5.7.3.4 (2005)
(Frosch)

Bar Spacing:

$$s = 700\ \gamma_e/(\beta_s * f_s) - 2d'_c$$

where:
- cover $\leq$ No Limit
- $f_s \leq$ No limit
- $\gamma_e = 1.00$ (Case 1) or 0.75 (Case 2)
- $\beta_s = 1 + d'_c/(0.7*(h-d'_c))$

FICE/FDOT Design Conference 2006
Designing For More Than Bridges & Roads

Service Limit State Stresses

LRFD 5.7.3.4 (2003)

$f_s \leq 0.6$ Fy:

Grade 60 = 36 ksi

Gr 65 WWF = 39 ksi

Gr 70 DWWF = 42 ksi

LRFD 5.7.3.4 (2005 Int.)

For Strength/Service Load Ratio = 1.42; f_s = 0.74 Fy)
(Ratio Varies 1.30 to 1.65)

Grade 60 = 40 ksi (CIP)
= 45 ksi (Precast)

Gr65 WWF = 43 ksi (CIP)
= 48 ksi (Precast)

Gr 70 DWWF = 47 ksi (CIP)
= 52 ksi (Precast)

FICE/FDOT Design Conference 2006
Designing For More Than Bridges & Roads

β_s – Surface Crack Width Factor

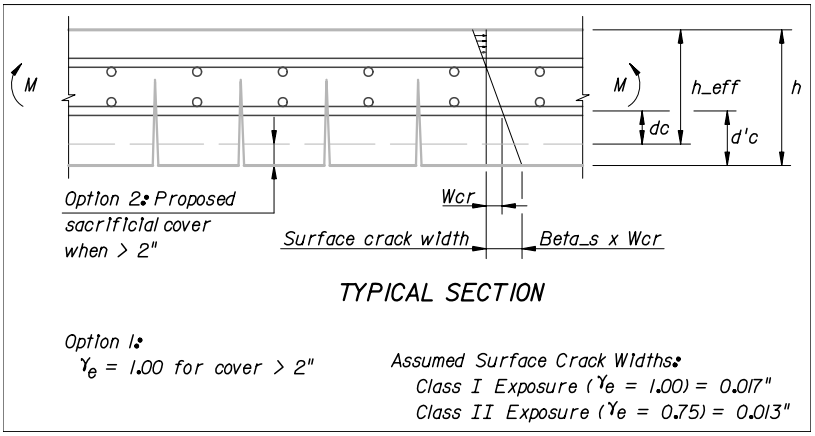

FICE/FDOT Design Conference 2006
Designing For More Than Bridges & Roads

Reinforcing Spacing

(8” thickness, 2” cover, Class 1 Exposure Factor)

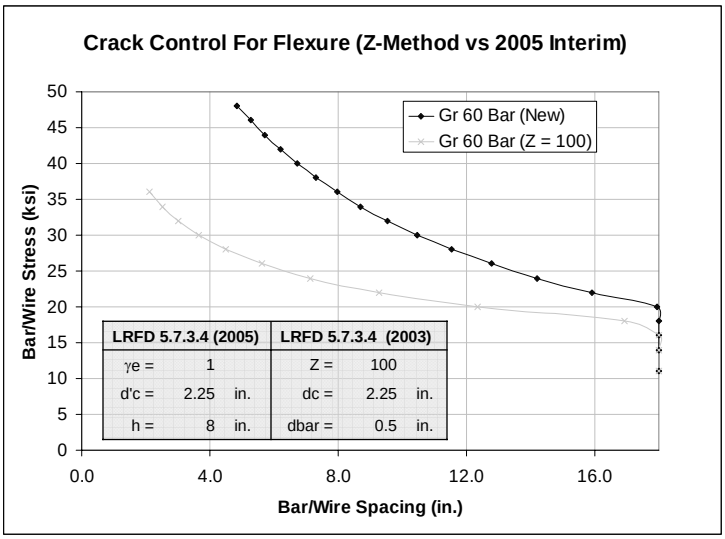

FICE/FDOT Design Conference 2006
Designing For More Than Bridges & Roads

Reinforcing Spacing

(8” thickness, 2” cover, Class 2 Exposure Factor)

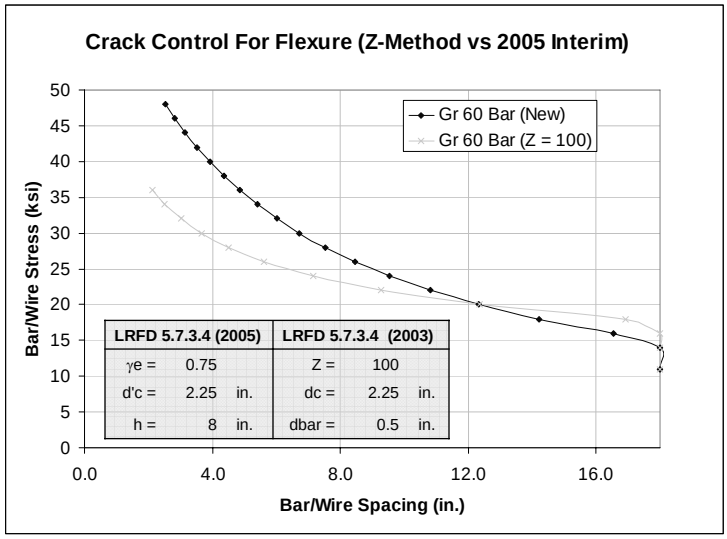

FICE/FDOT Design Conference 2006
Designing For More Than Bridges & Roads

Reinforcing Spacing

(9” thickness, 3” cover, Class 1 Exposure Factor)

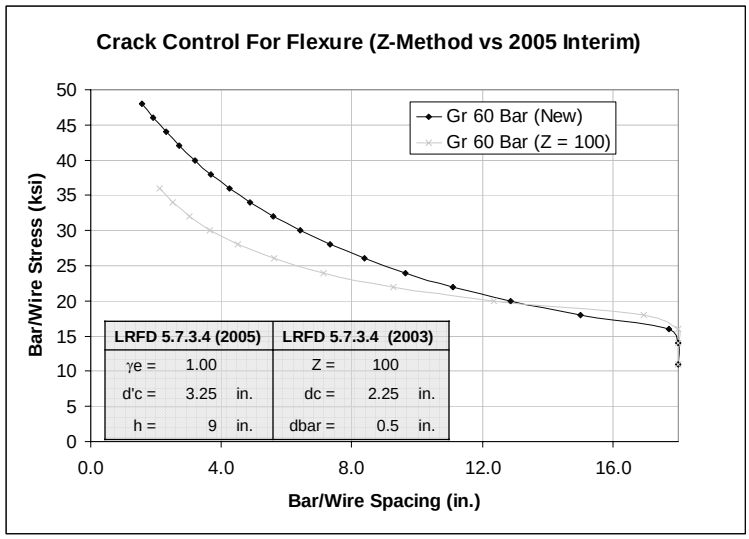

FICE/FDOT Design Conference 2006
Designing For More Than Bridges & Roads

Reinforcing Spacing

(9” thickness, 3” cover, Class 2 Exposure Factor)

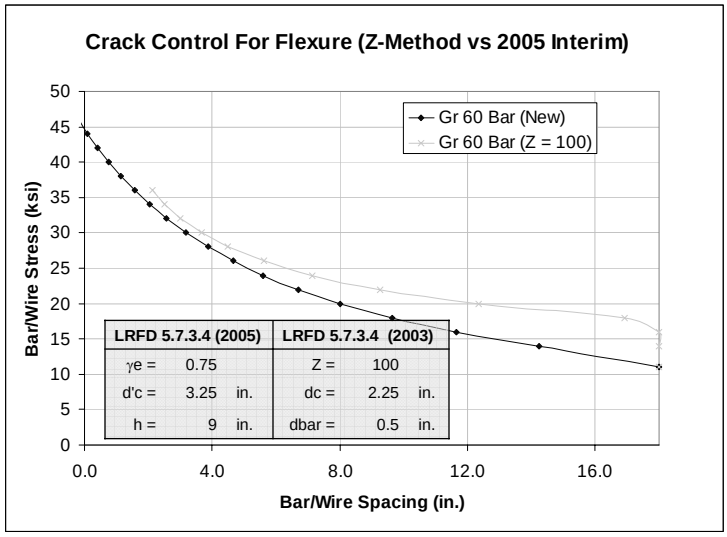

FICE/FDOT Design Conference 2006
Designing For More Than Bridges & Roads

Reinforcing Spacing

(12” thickness, 2” cover, Class 1 Exposure Factor)

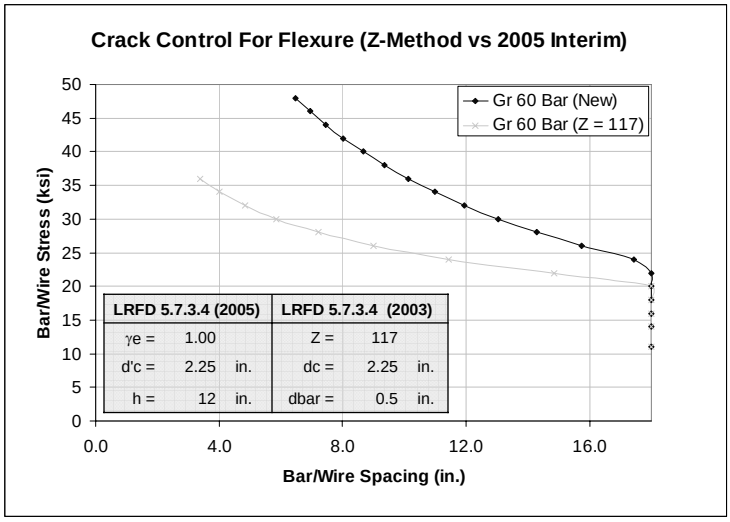

FICE/FDOT Design Conference 2006
Designing For More Than Bridges & Roads

Reinforcing Spacing

(12” thickness, 2” cover, Class 2 Exposure Factor)

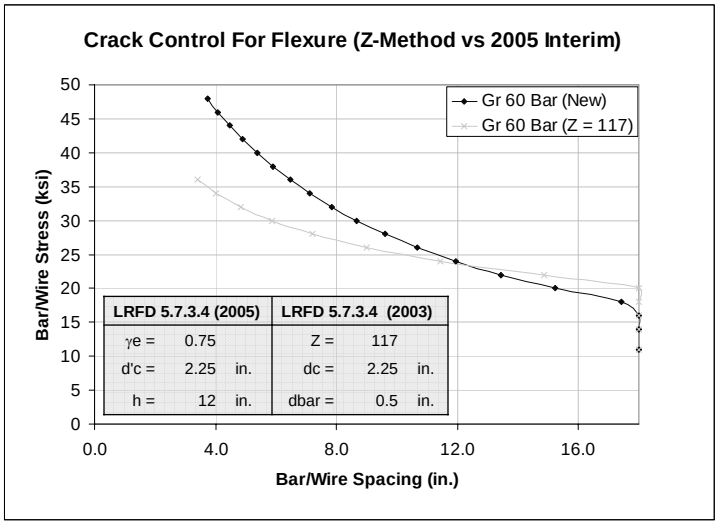

FICE/FDOT Design Conference 2006
Designing For More Than Bridges & Roads

Reinforcing Spacing

(13” thickness, 3” cover, Class 1 Exposure Factor)

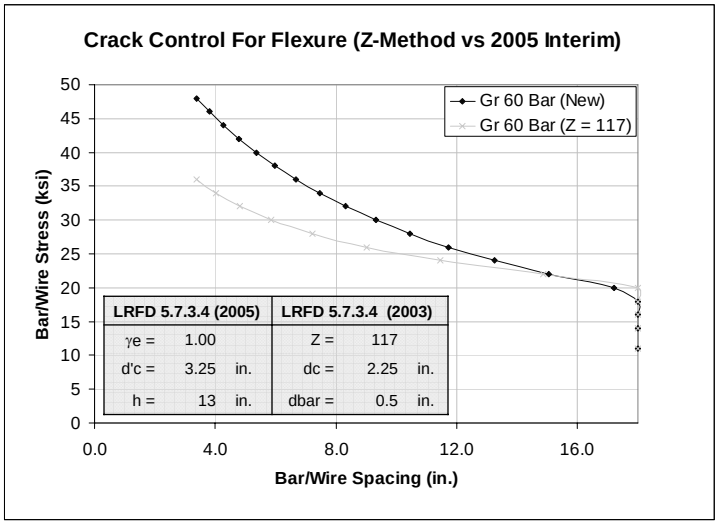

FICE/FDOT Design Conference 2006
Designing For More Than Bridges & Roads

Reinforcing Spacing

(13” thickness, 3” cover, Class 2 Exposure Factor)

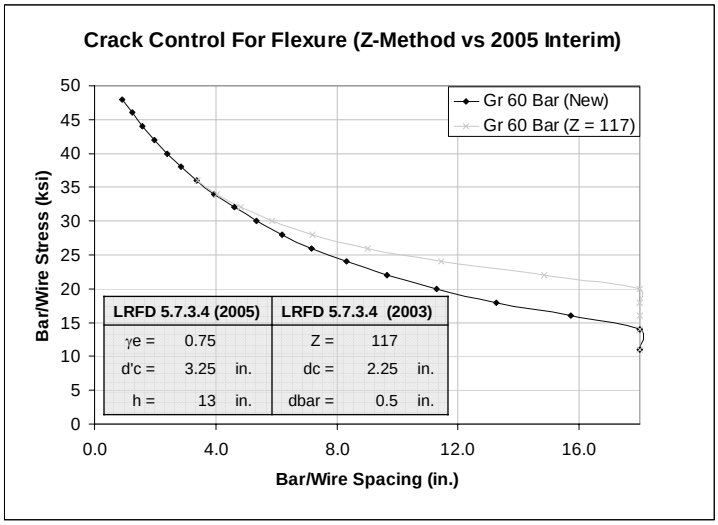

FICE/FDOT Design Conference 2006
Designing For More Than Bridges & Roads

Equivalent Strip Width

New Equivalent Strip Width Equations for Box Culverts with 2005 Interim LRFD Article 4.6.2.10 (use single truck only, with 1.2 MPF).

E = 96(in.) + 1.44*S(ft.)

Current provisions for:

- Slab Type Bridges LRFD 4.6.2.3

  Single lane (includes MPF effect):

  E = 10.0(in.) + 5.0*sqrt(L_1* W_1)

  Multi-lane:

  E = 84(in.) + 1.44*sqrt(L_1* W_1)

- Deck Equivalent Strip Method 4.6.2.1 ($\leq$ 15 spans)

  Epos = 26(in.) + 6.6*S(ft.)

  Eneg = 44(in.) + 3.0*S(ft.)

FICE/FDOT Design Conference 2006
Designing For More Than Bridges & Roads

Equivalent Strip Width

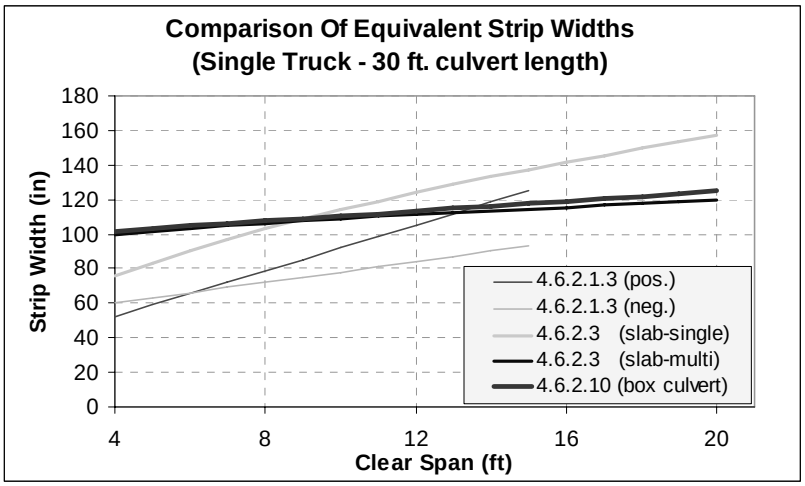

FICE/FDOT Design Conference 2006
Designing For More Than Bridges & Roads

WWR Fatigue Requirements

- AASHTO recently approved changes to the fatigue provisions for welded wire reinforcing (WWR) with cross weld in the high stress region (LRFD 5.5.3.2)

WWR stress range for fatigue:

$$f_f \leq 16 - 0.33\, f_{min}$$

Deformed rebar has been simplified to:

$$f_f \leq 24 - 0.33\, f_{min}$$

(2007 Interims – not official until published)

FICE/FDOT Design Conference 2006
Designing For More Than Bridges & Roads

Fatigue Stress Comparison

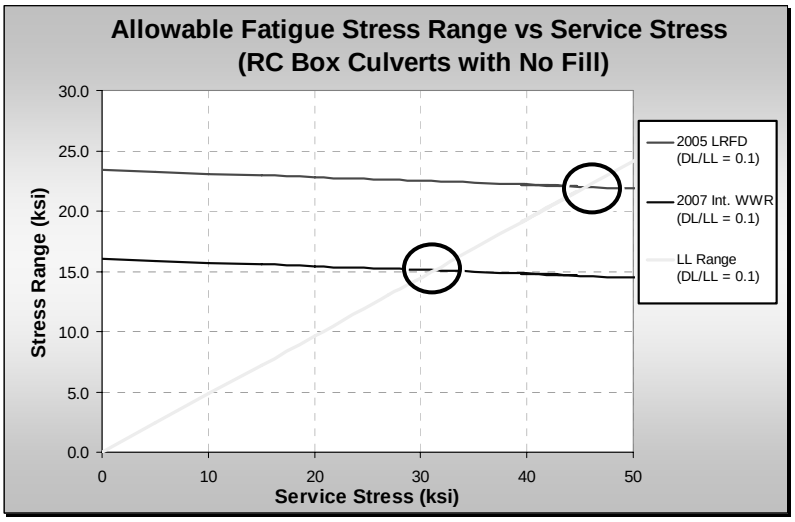

FICE/FDOT Design Conference 2006
Designing For More Than Bridges & Roads

Fatigue Stress Comparison

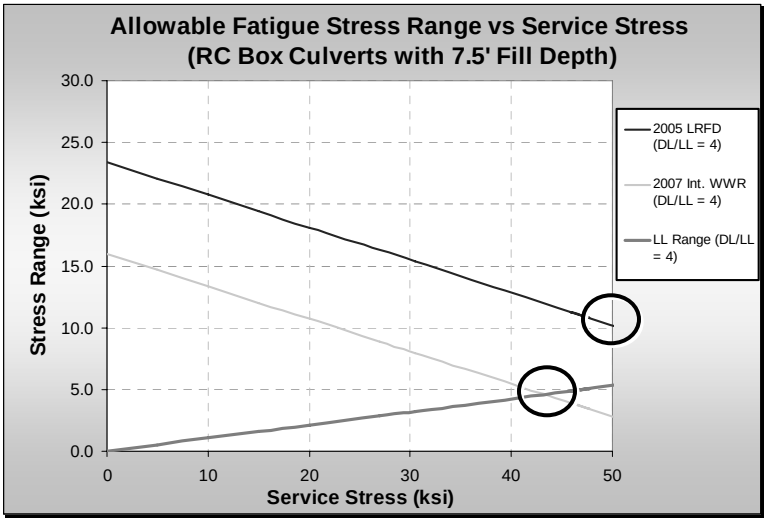

FICE/FDOT Design Conference 2006
Designing For More Than Bridges & Roads

Design Examples

- Design examples for 8’ x 8’ box culvert (single barrel) showing comparisons between LFD (HS20 & HS25) and the various recent LRFD Interim provisions:
  - Example 1 (shallow installation)
    - 1 ft. depth of fill cover above top slab
  - Example 2 (deep installation)
    - 20 ft. height of fill cover above top slab

4” bar/wire spacing was assumed for the crack control provisions with a Class 1 exposure factor, 2” concrete cover, fy = 65 ksi and f’c = 5,000 psi.

FICE/FDOT Design Conference 2006
Designing For More Than Bridges & Roads

Design Example 1

8 ft. x 8 ft. BOX CULVERT	**MEMBER THICKNESS (in.)**			**AREA OF REINFORCING (in.²/ft.)**			
Design Earth Cover = 1 ft. f’c = 5 ksi; fy = 65 ksi; c = 2”	Top Slab	Bottom Slab	Side Walls	Corners M-ve	Top Slab M+ve	Bot. Slab M+ve	Wall (Inside)
FDOT PSTDSN55 (LFD-HS25)	8 (10.5)	8	8	0.50	1.18	0.71	0.24
FDOT PSTDSN55 (LFD-HS20)	8 (9)	8	8	0.41	1.05	0.75	0.20
FDOT MATHCAD (CIP-LRFD 2003)	*8 (9.5)*	*8 (9.5)*	*8*	*0.39*	*0.69*	*0.65*	*0.20*
FDOT MATHCAD (CIP-LRFD 2005)	8 (9.5)	8 (9.5)	8	0.35	0.63	0.56	0.20
FDOT MATHCAD* (Precast-LRFD 2005)	**8 (8.5)**	**8 (8.5)**	**8**	**0.27**	**0.55**	**0.50**	**0.19**
*FDOT MATHCAD** (WWR Fatigue 2007)*	*8 (8.5)*	*8 (8.5)*	*8*	*0.36*	*0.75*	*0.67*	*0.19*
ASTM C1577 (Precast) (LRFD Prorated for cover)	**8**	**8**	**8**	**0.24**	**0.54**	**0.48**	**0.19**
ASTM C1433 (Precast) (LFD Prorated for cover)	8	8	8	0.36	0.82	0.6	0.28

FICE/FDOT Design Conference 2006
Designing For More Than Bridges & Roads

Design Example 1

Good correlation between the ASTM & FDOT - LRFD precast designs, because Strength Limit State governs the design.

Table Notes:

* Proposed updates to Mathcad Program for Precast Box Culverts for release January 2007.

** New Fatigue provisions for WWR in AASHTO 2007 Interim.

( ) Thickness required to satisfy shear capacity.

FICE/FDOT Design Conference 2006
Designing For More Than Bridges & Roads

Design Example 2

8 ft. x 8 ft. BOX CULVERT	**MEMBER THICKNESS (in.)**			**AREA OF REINFORCING (in.^{2}/ft.)**			
Design Earth Cover = 20 ft. f'c = 5 ksi; fy = 65 ksi	Top Slab	Bottom Slab	Side Walls	Corners M-ve	Top Slab M+ve	Bot. Slab M+ve	Wall (Inside)
FDOT PSTDSN55 (LFD-HS25)	8 (9.5)	8 (10)	8	0. 81	0.83	1.26	0.24
FDOT PSTDSN55 (LFD-HS20)	8 (9.5)	8 (10)	8	0.81	0.83	1.26	0.24
FDOT MATHCAD (CIP-LRFD 2003)	*8(10.5)*	*8 (11)*	*8 (9.5)*	*0.76*	*1.22*	*1.22*	*0.13*
FDOT MATHCAD (CIP-LRFD 2005)	8(10.5)	8 (11)	8 (9.5)	0.56	0.95	0.94	0.13
FDOT MATHCAD* (Precast-LRFD 2005)	**8**	**8**	**8**	**0.51**	**0.85**	**0.85**	**0.11**
*FDOT MATHCAD** (WWR Fatigue 2007)*	*8*	*8*	*8*	No effect on steel area			
ASTM C1577 (Precast) (LRFD Prorated for cover)	**8**	**8**	**8**	**0.37**	**0.71**	**0.75**	**0.19**
ASTM C1433 (Precast) (LFD Prorated for cover)	8	8	8	0.38	0.75	0.8	0.19

FICE/FDOT Design Conference 2006
Designing For More Than Bridges & Roads

Design Example 2

Poor correlation between the ASTM and FDOT - LRFD precast designs, because Service Limit State (crack control) governs the design.

Table Notes:

* Proposed updates to Mathcad Program for Precast Box Culverts for release January 2007.

** New Fatigue provisions for WWR in AASHTO 2007 Interim.

( ) Thickness required to satisfy shear capacity.

FICE/FDOT Design Conference 2006
Designing For More Than Bridges & Roads

Future PPM & SDG Revisions

(January 2007)

- Plans Preparation Manual – New Chapter 33:
  - Establish policy and comprehesive guidelines for selection, hydraulic & foundation considerations, loading requirements and reference to SDG.
- Structures Design Guidelines – New section in Chapter 3:
  - Structural analysis requirements for box culverts and three-side concrete culverts.

FICE/FDOT Design Conference 2006
Designing For More Than Bridges & Roads

Updates to Software

- LRFD Box Culvert Mathcad Program updates:
  - New crack control equations added (Version 2.21, 9/9/2005)
  - Precast box analysis module to be added including:
    - New fatigue provisions for WWR per LRFD 5.5.3.2
    - Shear capacity enhancements for single cell boxes per LRFD 5.14.5.3
    - Shear force reduction to account for precast haunches

FICE/FDOT Design Conference 2006
Designing For More Than Bridges & Roads

Contact Information

For questions and comments please contact Steve Nolan (State Structures Design Office) at the the following:

Phone: (850) 414-4272
Suncom 942-4272
Email: steven.nolan@dot.state.fl.us