Session 21

Max Sheppard

Ocean Engineering Associates, Inc.

Improved Complex Pier Scour Prediction Procedure

Topic Description

Improved Complex Pier Scour Prediction Procedure

Improvements: have been made in the methodology for predicting local scour at complex piers. In particular, the accuracy of scour depth predictions at piers with either spread footers or partially or fully buried pile caps has been improved. The revised procedure is outlined and comparisons between predicted and recently obtained laboratory data presented.

Speaker Biography

Max Sheppard is President of Ocean Engineering Associates, Inc. (OEA, Inc.) and Professor Emeritus in the Civil and Coastal Engineering Department at the University of Florida. His areas of expertise include: bridge scour, coastal hydraulics, sediment transport, coastal structures, and wave loading on coastal and offshore structures.

Session 21

Tom Glasser

Ocean Engineering Associates Inc.

Improved Complex Pier Scour Prediction Procedure

Topic Description

Improved Complex Pier Scour Prediction Procedure

Speaker Biography

Tom Glasser is a Coastal/Hydraulics Engineer at Ocean Engineering Associates Incorporated (OEA, Inc.). His areas of expertise are coastal and riverine hydraulics, sediment transport, storm surge and wave modeling, bridge scour, wave loading and design of coastal structures. Mr. Glasser received a B.S. degree in Engineering Sciences from University of Florida and a Master of Engineering degree in Coastal and Ocean Engineering from the University of Florida and has 11 years of experience.

Improved Complex Pier Scour Prediction Procedure

2006 DESIGN CONFERENCE
Designing For More Than Bridges and Roads

O'BRIEN, Inc.

Complex Pier Geometries

- Many Bridge Piers Have Complex Geometries
- Methodology Presented Here Is Suitable for Piers that Can Be Approximated by the Pier Shown in the Following Figures
- Physical Model Studies are Recommended for Piers that Deviate Significantly from the Generic Pier

Complex Pier Definition Diagram

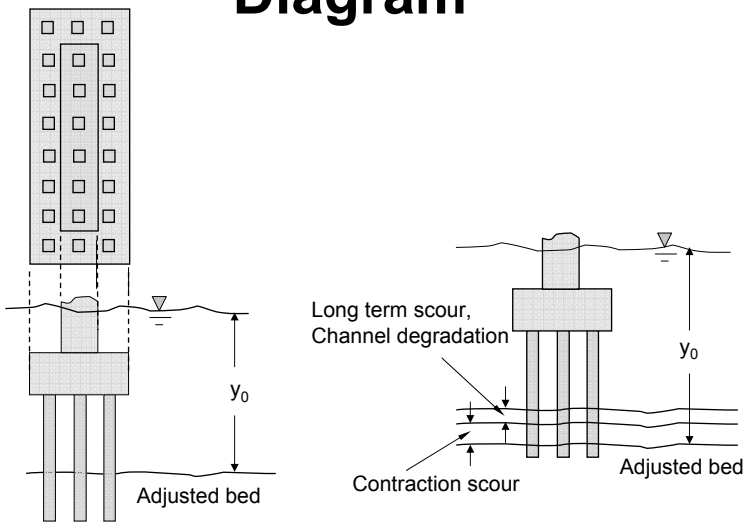

2006 Design Conference 3

Complex Pier Scour Methodology

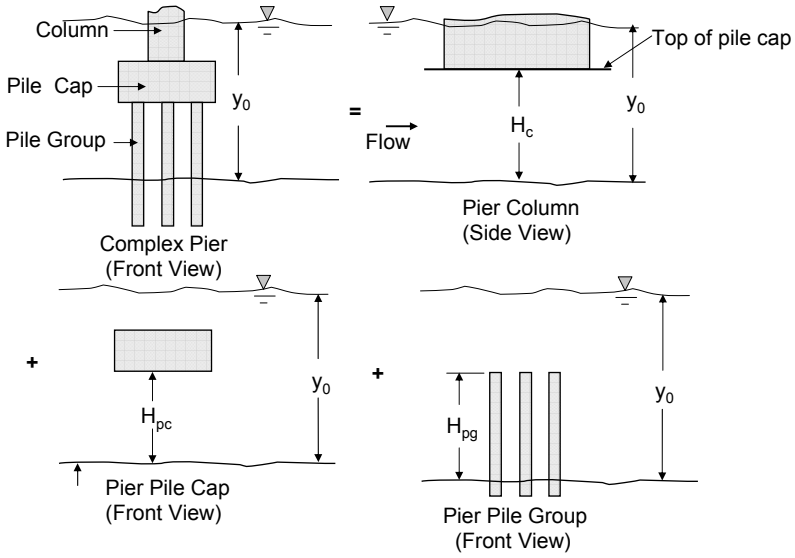

2006 Design Conference 4

Complex Pier Classification

Case 1
Pile Cap Above the Bed

Case 2
Partially Buried Pile Cap

Case 3
Buried Pile Cap

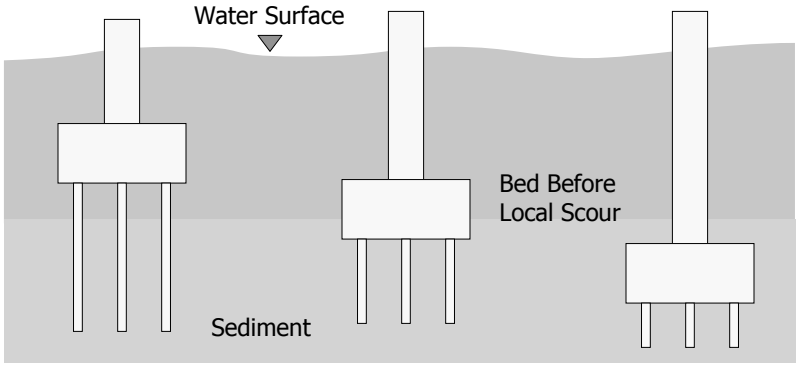

Complex Pier Scour Methodology

- Effective Diameter, D*:

  Diameter of a water surface penetrating circular pile that will experience the same equilibrium scour depth as the structure of interest under the same sediment/flow conditions

Complex Pier Scour Methodology

- Compute the Effective Diameter, D*, of the Complex Pier

where

Complex Pier Scour Methodology

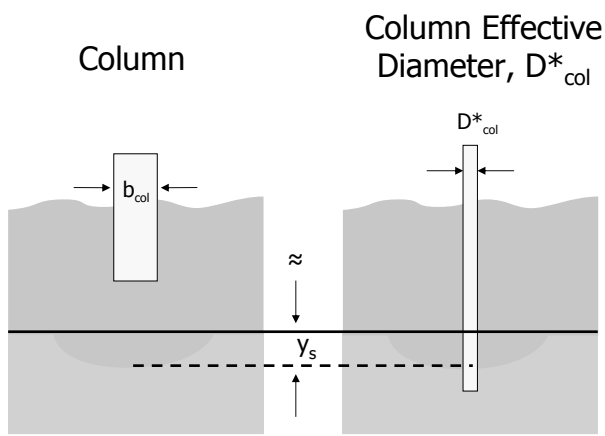

Complex Pier Scour Methodology

Pile Cap

Pile Cap
Effective Diameter, D^*_{pc}

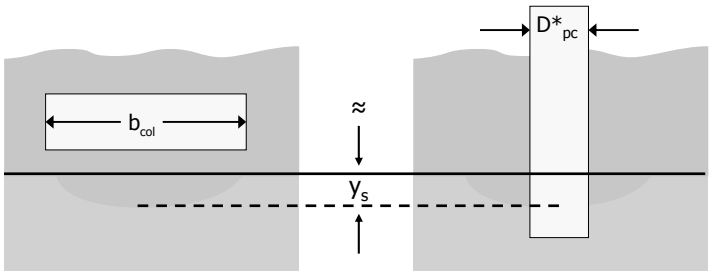

2006 Design Conference 9

Complex Pier Scour Methodology

Pile Group

Pile Group
Effective Diameter, D^*_{pg}

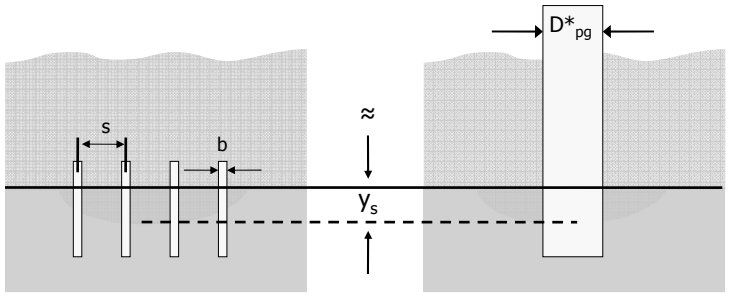

2006 Design Conference 10

Complex Pier Scour Methodology

Complex Pier $D^* = D^*_{col} + D^*_{pc} + D^*_{pg}$

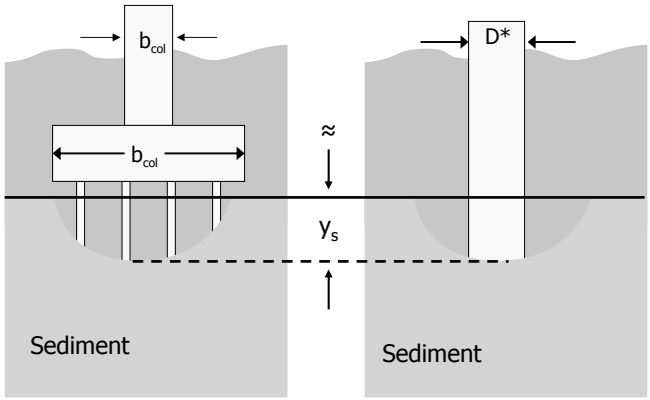

2006 Design Conference 11

Effective Diameters

- Need to Determine, D^*_{col}, D^*_{pc}, and D^*_{pg}, Using Known Structure and Flow Parameters
- $D^* = D^*_{col} + D^*_{pc} + D^*_{pg}$

2006 Design Conference 12

Complex Pier Scour Methodology

Complex Pier Scour Methodology

- Once the Effective Diameter has been Established, Equilibrium Scour Depth can be Computed Using Single Structure Scour Equations

Changes From HEC-18 Methodology

- Additional Data Available (Including Partially Buried and Buried Pile Caps)
- Use of Entire Structure Effective Diameter
- No Adjustments to Flow Velocity Required
- Flow Skew Angles Accounted For in Effective Diameter
- Methodology Extended to Include:
  - Partially buried pile caps
  - Buried pile caps

2006 Design Conference 15

New Laboratory Data

- Tests Conducted by Max Sheppard in Hydraulics Lab at the University of Auckland
- Tests Conducted by Sterling Jones at FHWA Lab
- Tests Conducted by Stephen Coleman in Hydraulics Lab at the University of Auckland

2006 Design Conference 16

Jones' Piers

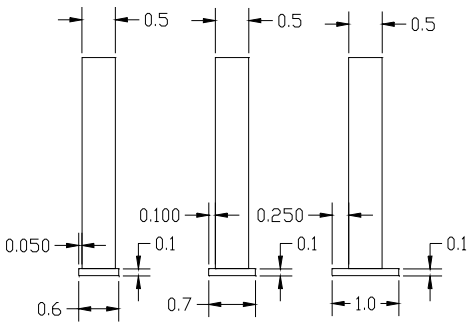

2006 Design Conference 17

Existing, New and Measured

Jones' Case 2 and 3 Data

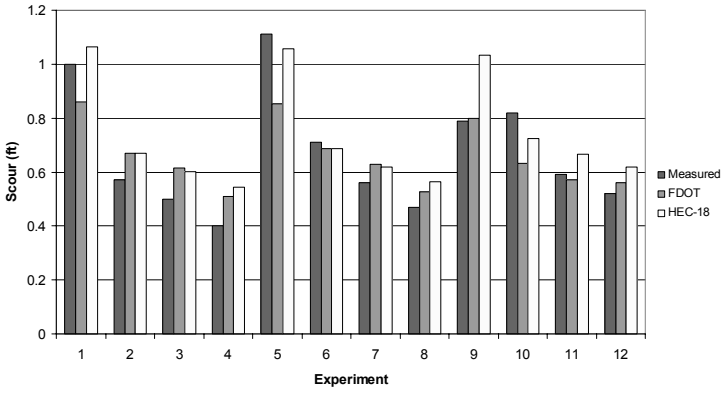

2006 Design Conference 18

Sheppards' Pier

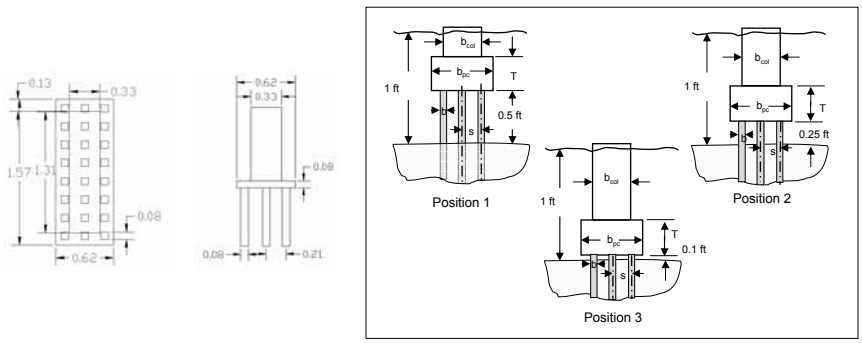

Existing, New and Measured

Sheppard's Data

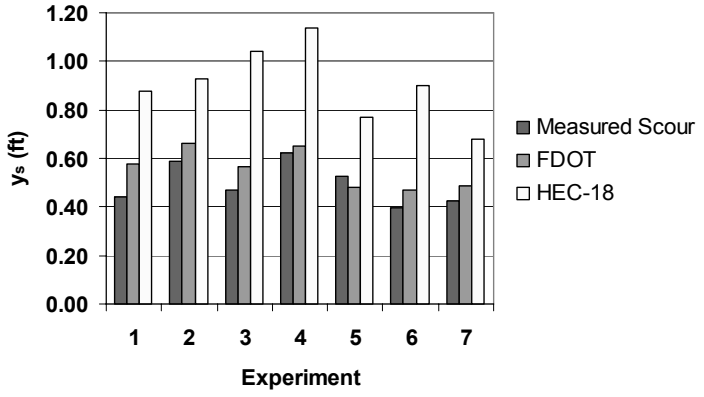

Colemans' Piers

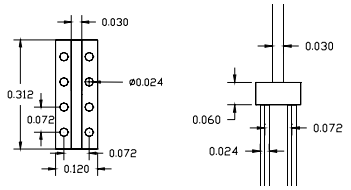

Pier 1

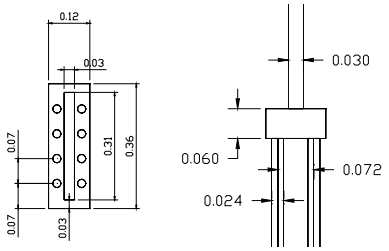

Pier 2

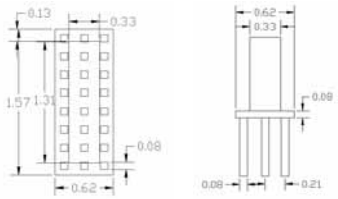

Pier 3

Existing, New and Measured

Coleman's Case 1 Data

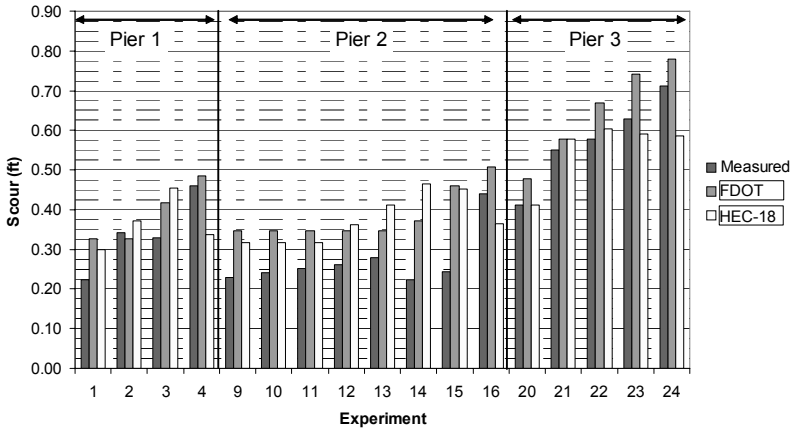

Existing, New and Measured

Coleman's Case 2 and 3 Data

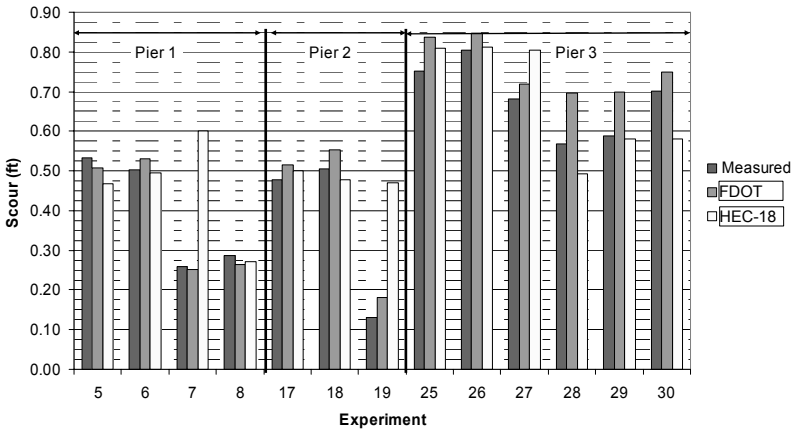

2006 Design Conference 23

FDOT Scour Program

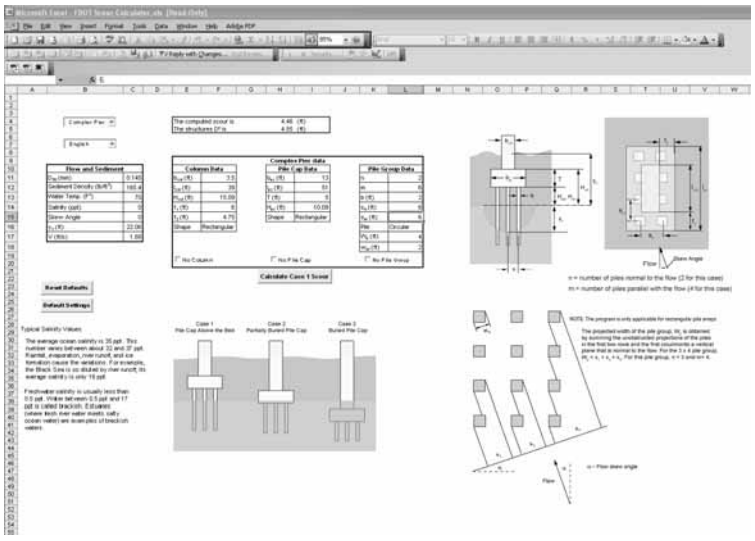

2006 Design Conference 24

Summary

- Procedure Divides the Complex Pier into Its Components and Treats Each Component Separately
- Compute Effective Diameter of Each Pier Component (column, pile cap, pile group)
- Sum Effective Diameters to Obtain Effective Diameter of Entire Complex Pier
- Compute Scour Depth Using Single, Simple Structure Equations

2006 Design Conference 25

Summary

- Procedure Extended to Include Partially and Completely Buried Pile Caps
  - Existing HEC-18 procedure can UNDER PREDICT scour depths for buried pile caps/footers

2006 Design Conference 26

Questions, Comments